Littelfuse®

Expertise Applied | Answers Delivered











INDUSTRIAL CIRCUIT PROTECTION CATALOG

UL GENERAL INDUSTRIAL FUSES **HIGH-SPEED FUSES** **MEDIUM VOLTAGE FUSES**
BLOCKS & HOLDERS **PRE-ENGINEERED PANELS & SWITCHES** **SOLAR PRODUCTS**
AUTOMOTIVE & ELECTRONIC FUSES **SURGE SUPPRESSION PRODUCTS**

NEW POWR-SPEED® High-Speed Fuses



Our Most Popular Solar Products





LFPXV Series
Touch-Safe
Fuse Holder



SPXI Series
In-Line Solar Fuse



LFXV15
Solar Fuse
Block & Cover



SPXV Series
Solar Fuse

Table of Contents

Littelfuse
Expertise Applied | Answers Delivered

1 Fuses

Fuse Class & Selection Chart 02
Class L Fuses 09
Class RK1 Fuses 14
Class RK5 Fuses 17
Class K5 Fuses 36
Class J Fuses 37
Class T Fuses 40
Class G Fuses 42
Class CC/CD Fuses 43
UL Supplemental/10 x 38 Fuses 50

2 Electronic Fuses & Automotive Blade

Glass/Electronic Fuses 53
Blade/Automotive Fuses 56

3 Medium Voltage Fuses

Medium Voltage Fuses Overview 59
R-Rated Medium Voltage Fuses 61
E-Rated Medium Voltage Fuses 63
Medium Voltage Live Parts 69

4 Telecommunication Products

Telecommunications Power Fuses 70

5 Special Purpose Fuses

Special Purpose Products Overview 78
1500 V dc Solar Rated Fuses 79
1000 V dc Solar Rated Fuses 89
Forklift/Stud Mounted Fuses 92
Plug Fuses 93
MEGA® Bolt-Down Fuses 93
In-Line Fuses & Holders 94
Cable Limiters 95
Cylindrical Fuses 96
OEM Custom Products 97
High-Speed Fuses Overview 98
High-Speed Square Body Fuses 99
MS Series High-Speed Fuse Microswitch 123
High-Speed Round-Body Fuses 125
Traditional High-Speed Fuses 131

6 Fuse Blocks & Holders

LF Series Fuse Blocks Overview 148
Class J Fuse Blocks 149
Class H, K5 & R Fuse Blocks 152
Class T Fuse Blocks 159
Class G Fuse Blocks 165
Class CC/CD & Midget Fuse Blocks 167
LF Series Fuse Block Covers 172
Solar Rated Fuse Blocks 176
Dead Front Fuse Holders 184
Miscellaneous Fuse Blocks & Holders 186
High-Speed Semiconductor Fuse Blocks 193
Distribution & Splicer Blocks 198
In-Line Fuse Holders 212

7 Switch Products

Switch Products Overview 222
Dc Disconnect Switch LS7 Series (1500 V) 223
Dc Disconnect Switch LS6 Series (500 V) 231
Dc Disconnect Switch LS6 Series (1000 V) 235
Dc Disconnect Switch LS6R Series (1500 V) 239
LM3030 30 A Class J Fuse Disconnect Switches 243
LM3060 60 A Class J Fuse Disconnect Switches 248
LM3100 100 A Class J Fuse Disconnect Switches 253
LM 3200 200 A Class J Fuse Disconnect Switches 258

8 Pre-Engineered Solutions

LFCP Fused Selection Coordination Panel 264
LCP Fused Selective Coordination Panel 266
LPS Series POWR-Switch (Shunt Trip Disconnect) 268

9 Suppression Products

Suppression Products Overview 271
Industrial Varistor Products 272
Surge Suppression Fuses 274
BVSP Suppression Fuses 276

10 Miscellaneous Accessories

Fuse Reducers 278
Box Cover Units 279
Fuse Replacement & Custom Kit (FRCK Series) 280
Fuse Display & Cabinet 281

11 Technical Application Guide

Fuseology Fundamentals 283
Selection Considerations 285
Time-current Curves & Peak Let-through Charts 289
Selective Coordination 291
UL/CSA Fuse Classes & Applications 294
Terms & Definitions 296
Motor Protection Tables 303
Condensed Fuse Cross Reference 306
Alphanumeric Index of Catalog Numbers 307

© 2023 Littelfuse, Inc.

FUSE CLASS AND SELECTION CHART

UL CLASS	LITTELFUSE SERIES	OVERLOAD CHARACTERISTICS	AC RATINGS			DC RATINGS			RECOMMENDED ACCESSORIES
			VOLTAGE (VOLTS)	CURRENT (AMPERES)	INTERRUPTING (AMPERES)	VOLTAGE (VOLTS)	CURRENT (AMPERES)	INTERRUPTING (AMPERES)	
 L	KLPC	Time-Delay	600	200–6000	200 K/300 K*	480	200–6000	20,000*	–
	KLLU	Time-Delay	600	601–4000	200,000	300	601–4000	20,000*	
	LDC	Fast-Acting	600	150–2000	200,000	600	150–2000	50,000	
 RK1	LLNRK	Time-Delay	250	0.1–600	200 K/300 K*	125	0.1–600	20,000*	LFR25
	LLSRK_ID	Time-Delay	600	0.1–600		300	0.1–600		LFR60
	LLSRK	Time-Delay	600	0.1–600		300	0.1–600		LFR60
	KLNR	Fast-Acting	250	1–600	200,000	125	1–600		LFR25
	KLSR	Fast-Acting	600	1–600		250 300	1–30 35–600		LFR60
 RK5	FLNR_ID	Time-Delay	250	35–600	200 K/300 K*	125	35–600	20,000	LFR25
	FLNR		250	0.1–600		125	0.1–600		
	FLSR_ID		600	0.1–600		300	0.1–600		LFR60
	FLSR		600	0.1–600		300	0.1–600		
	IDSR		600	0.1–600		600	0.1–600		
 J	JTD_ID	Time-Delay	600	0.8–600	200 K/300 K*	300	0.8–100	20,000*	LFJ60 • LFPSJ
	JTD	Time-Delay	600	0.8–600		500	110–600		
	JLS	Fast-Acting	600	1–600	200,000	–	–	–	
 T	JLLN	Fast-Acting	300	1–1200	200,000	160 125	1–60 70–1200	20 K (1–30 A)* 20 K (35–1200 A)	LFT30 • LSCR (700–800 A)
	JLLS		600	1–1200		300	1–1200	20 K (1–1200 A)*	LFT60 • LSCR (700–800 A)
 CC	CCMR	Time-Delay	600	0.2–30	200 K/300 K*	300 500	2/10–10 12–30	20,000*	L60030C LFPSC LPSC • 571 572 LEC • LEY
	KLDR	Time-Delay	600	0.1–30	200,000	300	0.1–30		
	KLKR	Fast-Acting	600	0.1–30	200,000	300	0.1–30		
 CD	CCMR	Time-Delay	600	35–60	200 K/300 K*	250	35–60	20,000*	LFC60060
 G	SLC	Time-Lag	600 480	0.5–20 25–60	100,000	170	0.5–60	10,000*	LFG600 (½–20 A) LFG480 (25–60 A)
 K5	NLN	Fast-Acting	250	1–600	50,000	250	1–600	20 K (1–60 A) 50 K (70–600 A)	LFH25
	NLS		600	1–600		600 500 400 600 500	1–7 8–30 35–60 70–200 225–600	20 K (1–60 A) 50 K (70–600 A)	LFH60

* Littelfuse self-certified

© 2023 Littelfuse, Inc.

FUSE CLASS AND SELECTION CHART

UL CLASS	LITTELFUSE SERIES	OVERLOAD CHARACTERISTICS	AC RATINGS			DC RATINGS			RECOMMENDED ACCESSORIES
			VOLTAGE (VOLTS)	CURRENT (AMPERES)	INTERRUPTING (AMPERES)	VOLTAGE (VOLTS)	CURRENT (AMPERES)	INTERRUPTING (AMPERES)	
 **Midget** (Supplementary)	BLF	Fast-Acting	250 125	0.5–15 20–30	10,000	–	–	–	L60030M 571 • 572 LEB • LEX • LPSM
	BLN	Fast-Acting	250	1–30	10,000	–	–	–	
	BLS	Fast-Acting	600 250	0.2–5 6–10	10,000	–	–	–	
	FLA	Time-Delay	125	0.1–30	10,000	–	–	–	
	FLM	Time-Delay	250	0.1–30	10,000	125	0.1–30	10,000*	
	FLQ	Time-Delay	500	0.1–30	10,000	300	0.1–30	10,000*	
	KLK	Fast-Acting	600	0.1–30	100 K/200 K*	500	0.1–30	50,000	
	KLKD	Fast-Acting	600	0.1–30	100 K/200 K*	600	0.1–30	50,000	
	KLQ	Time-Delay	600	1–6	10,000	–	–	–	
	FLU	Fast-Acting	1000	0.44/ 11	10,000 20,000	1000	0.44 11	10,000 20,000	LPHV
 **Solar**	SPF	Solar (gPV)	–	–	–	1000	1–30	20,000 (1A–20 A) 50,000 (25–30 A)	LPHV
	SPFJ		600	125–450	200,000	1000	70–450	20 K (70–200 A) 10 K (250–400 A) 20 K (450 A)	LFJ10 • LSCR
	SPFI		–	–	–	1000	2–30	20,000	Not Required
	SPNH		–	–	–	1500	50–400	30,000	LFNH
	SPXV		–	–	–	1500	1–60	50 K (1–20 A)* 50 K (25–30 A) SPXV-M	LFPXV
								50 K (35–60 A)	LFXV150
	SPXI		–	–	–	1500	1–32	30 K (1–20 A) 30 K (1–20 A) SPXI-B 50 K (35–50 A) 50 K (35–60 A) SPXI-B 50 K (25–32 A) SPXI-M & SPXI-BM	Not Required
	SPXC		–	–	–	1500	1–4	50,000*	
 **High-Speed**	L15S	Very Fast-Acting	150	1–1000	100,000	150 100	1–60 70–1000	20,000*	LSCR • 1LFS
	L25S		250	1–800	200,000	250 200	1–200 225–800		
	L50QS		500	35–800		500	35–800	50,000	LSCR
	L50S			10–800		450	10–800	20,000	LSCR • 1LFS
	L60S		600	1–800		–	–	–	
	L70QS		700	35–800		700	35–800	50,000	LSCR
	L75QS		–	–		750	35–800	50,000	LSCR
	L70S		700	10–800	–	650	10–800	20,000	LSCR • 1LFS
	PSR		500–700	40–2250	200,000	450–600	40–2250	150,000	MS3H1000C
	PSR		900–1300	50–1400	100,000	800–1000	50–1400	150,000	MS7H1500C
	PSX		–	–	–	1500	80–1400	250,000	MSXL2000C
 **Telecom**	L17T	Fast-Acting	–	–	–	170	70–1200	100,000	LTFD Series
	TLN		–	–	–		1–600		LFR25
	TLS		–	–	–		1–125		LTFD101 LFT30060 (cartridge)

* Littelfuse self-certified

Littelfuse POWR-GARD® Advanced Protection and Facility Savings







Increase safety with POWR-PRO® Fuses

- Superior current-limitation from $^{1}/_{10}$–6000 amperes
- Type 2 "No Damage" coordination with NEMA and IEC motor circuits
- Blown fuse indication (LLSRK_ID and JTD_ID Series)
- Compact motor protection (JTD/JTD_ID, CCMR Series)
- 300,000 AIR to meet trends toward higher SCCR

Look for the POWR-PRO® logo (or green fuse label) for superior protection

UL FUSE CLASS	POWR-PRO	PAGE NUMBERS
Class L	KLPC & LDC	8, 10
Class RK1	LLNRK/LLSRK/LLSRK_ID	13
Class J	JTD/JTD_ID	21
Class CC / CD	CCMR ($^{2}/_{10}$–60)	27

MRO™ PLUS

Material Reduction Opportunity Program

Increase safety and reduce inventory with MROplus

Your detailed reports will include:

- A streamlined current-limiting fuse inventory recommendation
- A guide to reducing electrical hazards within your facility
- An annual cost savings estimate
- A detailed cross reference

Contact your local sales representative for the MROplus request form.

© 2023 Littelfuse, Inc.

Developing Next Generation 1500 V dc Products for High and Low Current Ratings



LITTELFUSE SOLAR RATED PRODUCTS

This catalog incorporates our line of products designed specifically for the growing solar industry. As global standards are constantly changing, Littelfuse continues to develop circuit protection products that meet the requirements of the evolving photovoltaic market.

1500 V dc Solar Products

SPXV Series Space-Saving Solar Fuse 59

SPXI Series In-Line Solar Fuse..... 61

SPNH Series 1500 V dc Solar Fuse..... 63

LPXV Series 1500 V dc Fuse Holder..... 147

LFPXV Series 1500 V dc Fuse Holder..... 151

New Products..... Littelfuse.com/solar

600–1000 V dc Solar Products

SPFI Series 1000 V dc In-Line Solar Fuse..... 69

SPF Series 1000 V dc 10x38mm Fuse 70

SPFJ Series 1000 V dc Class J Size Fuse 71

LPHV 1000 V dc Fuse Holder..... 154

IDSR Series 600 V dc Class RK5 Fuse..... 17

KLKD Series 600 V dc 10x38mm Fuse..... 31

Look for this logo to indicate products that are used in solar applications. Visit our website **Littelfuse.com/solar** for the latest updates on approvals, certifications, and new products.

© 2023 Littelfuse, Inc.

Meet NEC Requirments and Save Time with Pre-Engineered Solutions



LFCP Series Coordination Panel

Compact and easily configurable, this pre-engineered panel is rated up to 600 V ac and available with 200 kA SCCR rating.

Features/Benefits

- Available in standard 20" width enclosure for easy installation
- Meets NEC selective coordination code requirements
- Class CC and J fuse holders have built-in open-circuit indication
- Fast-acting fuses protect against short circuit

Littelfuse.com/LFCP

See page 240

LPS Series Shunt Trip Disconnect Switch

Individual fusible shunt trip disconnect switch easily coordinates with system's overcurrent protection. Typical applications include elevator circuits.

Features/Benefits

- Pre-engineered single unit makes procurement easy
- Reduces labor costs up to 66 %
- Flexibility for a variety of applications
- Control power terminal block
- UL Listed package
- Cu and Al wire rated
- Lockable operating handle meets all code and safety requirements

Littelfuse.com/LPS

See page 244

 © 2023 Littelfuse, Inc.



Protecting Industry

Our Expertise in Protection Runs Deep

Since 1975, Littelfuse products have been protecting electrical systems and the people who use them. Our product solutions withstand the harshest underground and surface mining environments to improve safety and reduce downtime.



Neutral-Grounding Resistors (NGRs) and Monitors

- Meet 2018 CE Code requirements
- Detect shorted NGR and monitor neutral-to-ground continuity



Ground-Fault Protection

- Advanced filtering eliminates nuisance tripping and detect ground faults early
- Reliable, sensitive ground-fault detection down to 0 Hz on systems with variable-frequency drives on resistance-grounded systems



Ground-Check Relays

- Combination ground-fault and ground-check monitoring to ensure proper equipment grounding
- Our relays protect equipment at the end of some of the longest mining cable runs in the world



Arc-Flash Protection

- Reduce arc-flash energy and risk of injury or equipment damage
- Redundant solid-state trip circuit provides fast and fail-safe operation even from black start



Motor and Pump Protection

- Extend motor life and minimize process downtime
- Provide metering, datalogging, and fault diagnostics



SPD2 Series Type 2 Surge Protection Devices

- Safeguard components from transient overvoltage or surges

To view the full line of protection relay products please visit www.Littelfuse.com/protection-relays

© 2023 Littelfuse, Inc.

Section Overview

Since 1927 Littelfuse has been providing fuses to the industrial market. You can continue to count on our manufacturing and supply chain processes to deliver high quality fuses when you need them. At Littelfuse we leverage our global reach to stay on top of the latest applications and standards. Whether your circuit protection needs are focused on OEM, MRO, or construction, we are committed to being your circuit protection partner and appreciate your business.







FUSES

Table of Contents

UL Class L Fuses 9

UL Class RK1 Fuses 14

UL Class RK5 Fuses 17

UL Class K5 Fuses 36

UL Class J Fuses 37

UL Class T Fuses 40

UL Class G Fuses 42

UL Class CC/CD Fuses 43

UL Supplemental Midget (10x38) Fuses 50

 © 2023 Littelfuse, Inc.

CLASS L - KLPC SERIES POWR-PRO® FUSES

POWR-PRO® 600 Vac • Time-Delay • 200-6000 A



Description

KLPC series POWR-PRO® fuses meet or exceed the most stringent project specifications, including silver links, silver-plated copper end bells, glass-reinforced melamine bodies, O-ring seals between body and end bells, and granular quartz fillers.

Applications

- Switchboard mains and feeders
- Motor control center mains
- Large motor branch circuits
- Protection of power circuit breakers

Features/Benefits

- POWR-PRO® Performance
- Best-in-class time-delay withstand
- Current-Limiting
- Easily coordinated with other system components
- 300 kA AC Interrupting Rating (self-certified)

Specifications

Voltage Ratings	AC: 600 Vac or less DC: 480 V
Ampere Range	200 – 6000 A
Interrupting Ratings	AC: 200 kA rms symmetrical 300 kA rms symmetrical (Littelfuse self-certified) DC: 20,000 A
Approvals	AC: Standard 248-10, Class L UL Listed 601–6000 A (File: E81895) UL Recognized 200–600 A (File: E71611) CSA Certified 601–6000 A (File: LR29862) Federal Specifications 700–6000 A (QPL-W-F-1814) DC: Littelfuse self-certified
Material	Melamine body, Copper caps (silver plated)
Country of Origin	Mexico

Ordering Information

AMPERE RATINGS					
200	500	800	1350	2000	3000
250	600	900	1400	2100	3500
300	601	1000	1500	2200	4000
350	650	1100	1600	2300	4500
400	700	1200	1800	2400	5000
450	750	1300	1900	2500	6000

SERIES	AMPERAGE	CATALOG NUMBER	ORDERING NUMBER
KLPC	800	KLPC800	KLPC800.X

Web Resources

Download TC Curves, CAD drawings and other technical information: **littelfuse.com/klpc**

Dimensions

Please refer to the Class L dimensions 12

Peak Let-Thru Curve

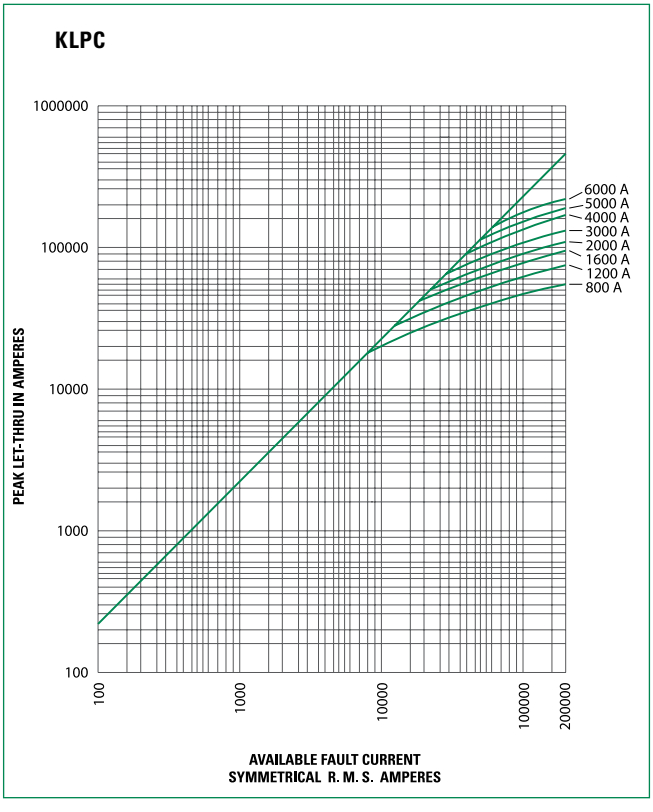

Note: for more information, see Current-Limiting Effects table

© 2023 Littelfuse, Inc.

CLASS L - KLLU SERIES FUSES

600 V ac • Time-Delay • 601–4000 A



Description

KLLU series fuses meet or exceed UL requirements for UL Class L fuses. The KLLU series offers an economical alternative to KLPC POWR-PRO® fuse with a slightly higher peak let through current.

Applications

- Service switches
- Switchboard mains and feeders
- Motor control center mains
- Large motor branch circuits
- Circuit breaker protection

Features/Benefits

- Current-Limiting
- Easily coordinated with other system components
- 200 kA ac Interrupting Rating

Specifications

Voltage Ratings	Ac: 600 V ac or less Dc: 300 V
Interrupting Ratings	Ac: 200 kA rms symmetrical Dc: 20 kA rms symmetrical
Ampere Range	601–4000 A
Approvals	Standard 248-10, Class L UL Listed (File: E81895) CSA Certified (File: LR29862) DC: Littelfuse self-certified

Ordering Information

AMPERE RATINGS					
601	750	1000	1400	1800	3000
650	800	1200	1500	2000	3500
700	900	1350	1600	2500	4000

SERIES	AMPERAGE	CATALOG NUMBER	ORDERING NUMBER
KLLU	601	KLLU601	KLLU601.X

Web Resources

Download TC Curves, CAD drawings and other technical information: **littelfuse.com/kllu**

Dimensions

Please refer to the Class L dimensions 13

Peak Let-Thru Curve

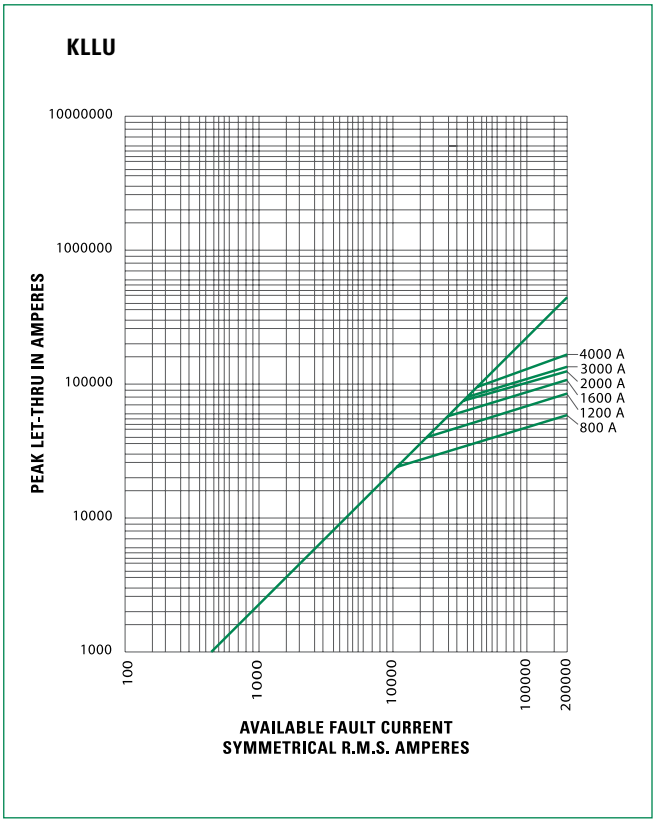

Note: for more information, see Current-Limiting Effects table

© 2023 Littelfuse, Inc.

CLASS L - LDC SERIES POWR-PRO® FUSES

POWR-PRO® 600 Vac/dc • Fast Acting • 150-2000 A



Description

High DC voltage and interrupting ratings make the POWR-PRO® LDC ideal for DC applications. The DC interrupting performance exceeds UL listing requirements.

Applications

- Solar inverter and array protection
- UPS protection especially for large battery circuits
- DC distribution and variable speed drives
- Mass transit systems

Features/Benefits

- POWR-PRO® Performance
- Extremely Current-Limiting
- 600 Vac/dc rated
- 200 kA AC Interrupting Rating
- 50 kA DC Interrupting Rating

Specifications

Voltage Ratings	600 Vac/dc or less
Ampere Range	150–2000 A
Interrupting Ratings	AC: 200 kA rms symmetrical DC: 50 kA
Time Constant	16 ms
Approvals	Standard 248-10, Class L UL Listed 601–2000 A (File: E81895) UL Recognized 150–600 A (File: E71611) CSA Certified 800-2000 A (File: LR29862)
Material	Melamine body, Copper caps (silver plated)
Country of Origin	Mexico

Ordering Information

AMPERE RATINGS				
150	450	750	1201	1601
200	500	800	1300	1800
250	600	900	1350	1900
300	601	1000	1400	2000
350	650	1100	1500	
400	700	1200	1600	

SERIES	AMPERAGE	CATALOG NUMBER	ORDERING NUMBER
LDC	700	LDC700	0LDC700.X

Web Resources

Download TC curves, CAD drawings and other technical documents: **littelfuse.com/ldc**

Dimensions

Please refer to the Class L dimensions 12

Peak Let-Thru Curve

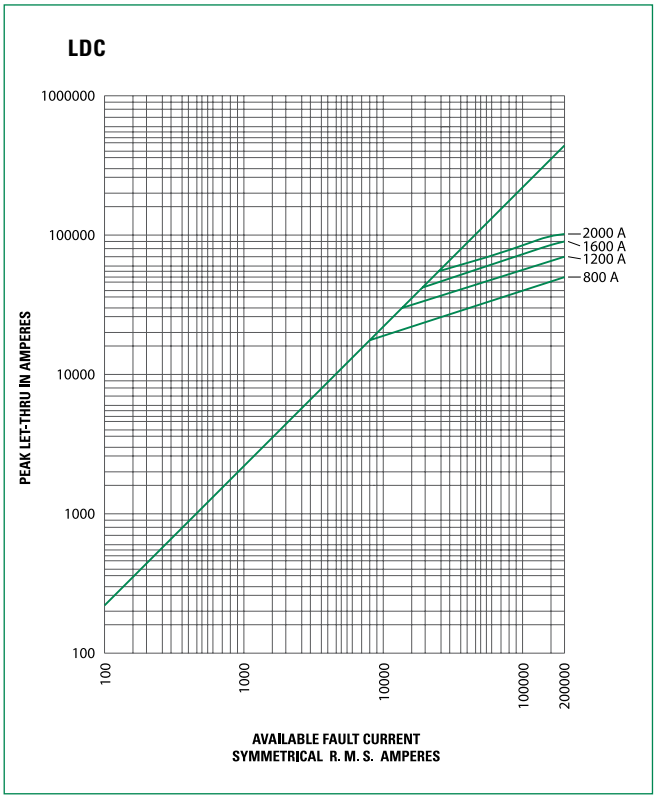

Note: for more information, see Current-Limiting Effects table

CLASS L CURRENT-LIMITING EFFECTS

Current-Limiting Effects of KLPC (600 V) Fuses

SHORT CIRCUIT CURRENT*	APPARENT RMS SYMMETRICAL CURRENT FOR VARIOUS FUSE RATINGS							
	800 A	1200 A	1600 A	2000 A	3000 A	4000 A	5000 A	6000 A
5,000	5,000	5,000	5,000	5,000	5,000	5,000	5,000	5,000
10,000	8,800	10,000	10,000	10,000	10,000	10,000	10,000	10,000
15,000	10,500	13,500	15,000	15,000	15,000	15,000	15,000	15,000
20,000	12,000	15,000	19,000	20,000	20,000	20,000	20,000	20,000
25,000	13,000	16,000	21,000	24,000	25,000	25,000	25,000	25,000
30,000	14,000	18,000	23,000	26,000	30,000	30,000	30,000	30,000
35,000	15,000	19,000	24,000	27,000	32,000	35,000	35,000	35,000
40,000	16,000	20,000	25,000	28,000	34,000	40,000	40,000	40,000
50,000	17,000	22,000	27,000	31,000	37,000	42,500	50,000	50,000
60,000	18,000	24,000	29,000	34,000	40,000	46,000	52,000	60,000
80,000	20,000	26,000	32,000	37,000	44,000	51,000	57,000	70,000
100,000	21,000	27,000	34,000	40,000	46,000	57,000	65,000	75,000
150,000	23,000	31,000	38,000	44,000	54,000	67,000	75,000	87,000
200,000	24,000	34,000	42,000	46,000	57,000	70,000	80,000	95,000

Current-Limiting Effects of KLLU (600 V) Fuses

SHORT-CIRCUIT CURRENT*	APPARENT RMS SYMMETRICAL CURRENT FOR VARIOUS FUSE RATINGS					
	800 A	1200 A	1600 A	2000 A	3000 A	4000 A
5,000	5,000	5,000	5,000	5,000	5,000	5,000
10,000	10,000	10,000	10,000	10,000	10,000	10,000
15,000	11,900	15,000	15,000	15,000	15,000	15,000
20,000	13,000	18,500	20,000	20,000	20,000	20,000
25,000	14,000	20,000	25,000	25,000	25,000	25,000
30,000	14,500	21,000	26,500	30,000	30,000	30,000
35,000	15,000	22,000	28,500	34,000	35,000	35,000
40,000	16,000	23,000	30,000	35,000	37,000	40,000
50,000	17,000	24,000	32,000	38,000	39,000	44,000
60,000	18,000	26,000	34,000	42,000	43,000	50,000
80,000	19,000	28,000	36,000	44,000	46,000	54,500
100,000	21,000	30,000	38,000	46,000	48,000	57,500
150,000	24,000	35,000	44,000	50,000	51,000	68,000
200,000	26,000	38,000	48,000	53,000	60,000	74,000

Current-Limiting Effects of LDC (600 V) Fuses

SHORT CIRCUIT CURRENT*	APPARENT RMS SYMMETRICAL CURRENT FOR VARIOUS FUSE RATINGS			
	800 A	1200 A	1600 A	2000 A
5,000	5,000	5,000	5,000	5,000
10,000	8,500	10,000	10,000	10,000
15,000	9,750	14,000	15,000	15,000
20,000	10,500	15,000	19,000	20,000
25,000	11,500	16,000	21,000	25,000
30,000	12,000	17,000	22,000	26,000
35,000	12,500	18,000	23,000	28,000
40,000	13,500	19,000	24,000	30,000
50,000	14,000	21,000	26,000	32,000
60,000	15,000	22,000	28,000	34,000
80,000	16,000	24,000	30,000	36,000
100,000	18,000	25,000	33,000	40,000
150,000	20,000	30,000	38,000	44,000
200,000	23,000	32,000	41,000	46,000

*Prospective RMS Symmetrical Amperes Short-Circuit Current
Note: Data derived from Peak Let-Thru Curves

© 2023 Littelfuse, Inc.

CLASS L SERIES DIMENSIONS

Dimensions

AMPERES	FIG. NO.	DIMENSIONS INCHES (mm)												
		A	B	C	D	E	F	G	H	J	K	L	M	N
200–800 KLLU: 601–800	1	3¾ (95.3)	5¾ (146.1)	6¾ (171.5)	—	—	8⅝ (219.1)	—	—	2 (50.8)	2½ (63.5)	⅜ (9.5)	⅝ x 1⅛ (15.9) x (28.6)	—
900–1200	2	3¾ (95.3)	5¾ (146.1)	6¾ (171.5)	9¼ (235.0)	9½ (241.3)	10¾ (273.1)	—	—	2 (50.8)	2½ (63.5)	⅜ (9.5)	⅝ x ¾ (15.9) x (19.1)	⅝ x 1⅛ (15.9) x (28.6)
1300–1600	2	3¾ (95.3)	5¾ (146.1)	6¾ (171.5)	9¼ (235.0)	9½ (241.3)	10¾ (273.1)	—	—	2⅜ (60.3)	3 (76.2)	7⁄16 (11.1)	⅝ x ¾ (15.9) x (19.1)	⅝ x 1⅛ (15.9) x (28.6)
1800–2000	2	3¾ (95.3)	5¾ (146.1)	6¾ (171.5)	9¼ (235.0)	9½ (241.3)	10¾ (273.1)	—	—	2¾ (69.9)	3½ (88.9)	½ (12.7)	⅝ x ¾ (15.9) x (19.1)	⅝ x 1⅛ (15.9) x (28.6)
2100–2500	3	4 (101.6)	5¾ (146.1)	6¾ (171.5)	9¼ (235.0)	9½ (241.3)	10¾ (273.1)	1⅝ (41.3)	1¾ (44.5)	3½ (88.9)	5 (127.0)	¾ (19.1)	⅝ x ¾ (15.9) x (19.1)	⅝ x 1⅛ (15.9) x (28.6)
2501–3000	3	4 (101.6)	5¾ (146.1)	6¾ (171.5)	9¼ (235.0)	9½ (241.3)	10¾ (273.1)	1⅝ (41.3)	1¾ (44.5)	4 (101.6)	5 (127.0)	¾ (19.1)	⅝ x ¾ (15.9) x (19.1)	⅝ x 1⅛ (15.9) x (28.6)
3500–4000	4	4 (101.6)	5¾ (146.1)	6¾ (171.5)	9¼ (235.0)	9½ (241.3)	10¾ (273.1)	1¾ (44.5)	3¼ (82.6)	4¾ (120.7)	5¾ (146.1)	¾ (19.1)	⅝ x 1⅜ (15.9) x (34.9)	⅝ x 1⅜ (15.9) x (34.9)
4500–5000 (excluding KLLU)	5	4 (101.6)	5¾ (146.1)	—	9¼ (235.0)	—	10¾ (273.1)	1⅝ (41.3)	3¼ (82.6)	5¼ (133.4)	7⅛ (181.0)	1 (25.4)	⅝ DIA. (15.9)	—
6000 (excluding KLLU)	5	4 (101.6)	5¾ (146.1)	—	9¼ (235.0)	—	10¾ (273.1)	1⅝ (41.3)	3¼ (82.6)	5¼ (133.4)	7⅛ (181.0)	1 (25.4)	⅝ DIA. (15.9)	—

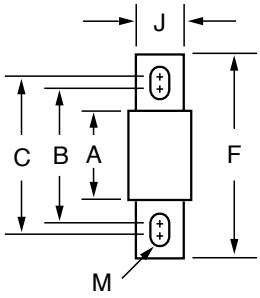

FIG.1

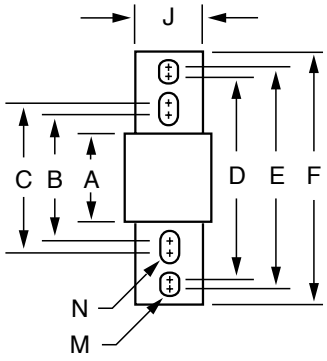

FIG.2

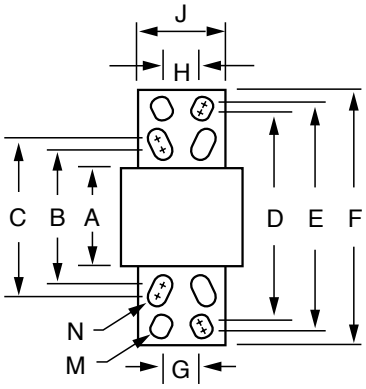

FIG. 3

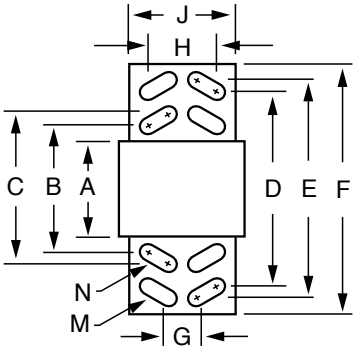

FIG. 4

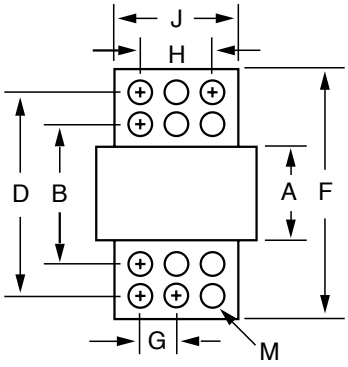

FIG. 5

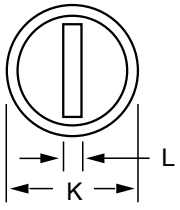

© 2023 Littelfuse, Inc.

CLASS RK1 – LLNRK • LLSRK • LLSRK_ID SERIES FUSES

POWR-PRO® 250/600 Vac • Dual Element • Time-Delay • 1/10—600 A

QPL



Description

RK1 fuses are extremely current-limiting fuses meaning they greatly reduce or eliminate damage to circuits and equipment under short-circuit conditions. Replacing existing Class H, K and RK5 fuses with RK1 fuses is one of the easiest ways to immediately improve the protection of plant workers and equipment.

Applications

- All general purpose circuits
- Motors
- Transformers
- Safety upgrades

Features/Benefits

- POWR-PRO Performance
- Indication available
- Dual-element design
- Extremely Current-Limiting
- IEC Type 2 "No Damage" protection to IEC and NEMA type motor starters
- Indicating and DIN mount fuse holders available

Specifications

Voltage Ratings 600 Vac/300 Vdc (LLSRK/LLSRK_ID)
250 Vac/125 Vdc (LLNRK)

Interrupting Ratings AC: 200 kA rms symmetrical
300 kA rms symmetrical
(Littelfuse self-certified)
DC: 20 kA

Ampere Range 1/10 – 600 A

Approvals AC: Standard 248-12, Class RK1
UL Listed (File: E81895)
CSA Certified (File: LR29862)
DC: Littelfuse self-certified
Federal Specification WF-1814
(QPL- W-F-1814)

Recommended Fuse Holders

LFR60 Series • LFR25 Series 94

Ordering Information

AMPERE RATINGS						
1/10	1	2 8/10	6 1/4	25	80	250
15/100	1 1/8	3	7	30	90	300
2/10	1 1/4	3 2/10	8	35	100	350
1/4*	1 4/10	3 1/2	9	40	110	400
3/10	1 6/10	4	10	45	125	450
4/10	1 8/10	4 1/2	12	50	150	500
1/2	2	5	15	60	175	600
6/10	2 1/4	5 6/10	17 1/2	70	200	
8/10	2 1/2	6	20	75*	225	

Note: All LLSRK_ID fuses rated 1 amp and above are Indicator® fuses.
**Ampere rating only available for the 600 V.*

600 V

TYPE	SERIES	AMP	CATALOG NUMBER	ORDERING NUMBER
INDICATING	LLSRK_ID	60	LLSRK060ID	LSRK060.TXID
NON-INDICATING	LLSRK	60	LLSRK060	LSRK060.T

250 V

TYPE	SERIES	AMP	CATALOG NUMBER	ORDERING NUMBER
NON-INDICATING	LLNRK	80	LLNRK080	LNRK080.V

Web Resources

Download TC Curves, CAD drawings and other technical information: **littelfuse.com/llsrk**
littelfuse.com/llnrk

Dimensions

Please refer to the Class R dimensions..... 19

Peak Let-Thru Curve (600 V)

LLSRK & LLSRKID

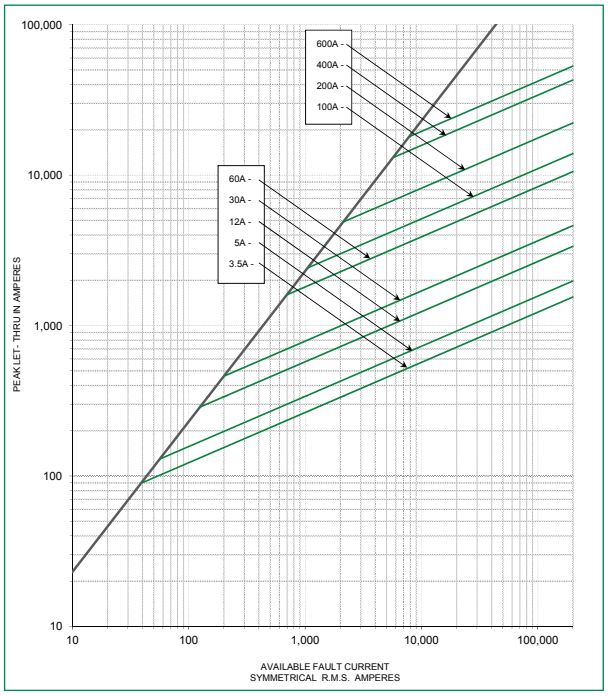

Note: For more information, see Peak Let-Thru Table on pg. 14

© 2023 Littelfuse, Inc.

CLASS RK1 – LLNRK • LLSRK • LLSRK_ID SERIES FUSES

Current-Limiting Effects of LLSRK and LLSRK_ID (600 V) Fuses

SHORT CIRCUIT CURRENT*	APPARENT RMS SYMMETRICAL CURRENT FOR VARIOUS FUSE RATINGS								
	3.5 A	5 A	12 A	30 A	60 A	100 A	200 A	400 A	600 A
5,000	196	251	427	586	1,341	1,764	2,821	-	-
10,000	247	316	538	739	1,689	2,222	3,554	6,850	8,489
15,000	283	362	616	845	1,934	2,544	4,069	7,842	9,718
20,000	312	399	677	930	2,129	2,800	4,478	8,631	10,696
25,000	336	430	730	1,002	2,293	3,016	4,824	9,297	11,522
30,000	357	456	776	1,065	2,437	3,205	5,126	9,880	12,244
35,000	376	481	816	1,121	2,565	3,374	5,397	10,401	12,889
40,000	393	502	854	1,172	2,682	3,528	5,642	10,874	13,476
50,000	423	541	919	1,263	2,889	3,800	6,078	11,714	14,516
60,000	450	575	977	1,342	3,070	4,038	6,459	12,448	15,426
80,000	495	633	1,075	1,477	3,379	4,445	7,109	13,700	16,979
100,000	533	682	1,158	1,591	3,640	4,788	7,658	14,758	18,290
150,000	610	781	1,326	1,821	4,167	5,481	8,766	16,894	20,936
200,000	671	859	1,460	2,005	4,586	6,032	9,648	18,594	23,043

Current-Limiting Effects of LLNRK (250 V) Fuses

SHORT CIRCUIT CURRENT*	APPARENT RMS SYMMETRICAL CURRENT FOR VARIOUS FUSE RATINGS					
	30 A	60 A	100 A	200 A	400 A	600 A
5,000	900	1,400	2,000	2,700	4,800	5,000
10,000	1,100	1,900	2,700	3,500	6,200	8,500
15,000	1,250	2,100	3,100	4,200	7,000	9,500
20,000	1,400	2,400	3,500	4,600	8,000	10,800
25,000	1,500	2,600	3,900	5,000	8,300	11,500
30,000	1,600	2,800	4,000	5,250	9,000	12,000
35,000	1,700	2,850	4,300	5,500	9,500	12,500
40,000	1,800	3,000	4,600	5,800	9,800	13,500
50,000	1,900	3,200	4,800	6,300	10,200	14,000
60,000	2,000	3,500	5,200	6,700	11,000	15,000
80,000	2,200	3,900	5,700	7,200	12,200	16,000
100,000	2,300	4,000	6,000	8,100	12,700	17,000
150,000	2,500	4,500	6,700	9,100	14,000	19,000
200,000	2,600	4,800	7,000	9,700	15,000	20,000

*Prospective RMS Symmetrical Amperes Short-Circuit Current
Note: Data derived from Peak Let-Thru Curves

LLSRK_ID Fuses—Quality Construction for performance you can rely on…

Littelfuse **LLSRK_ID** Fuses feature true dual-element construction. This robust design withstands repeated surges within rated time delay without opening needlessly, eliminating downtime caused by power surges or equipment demands.

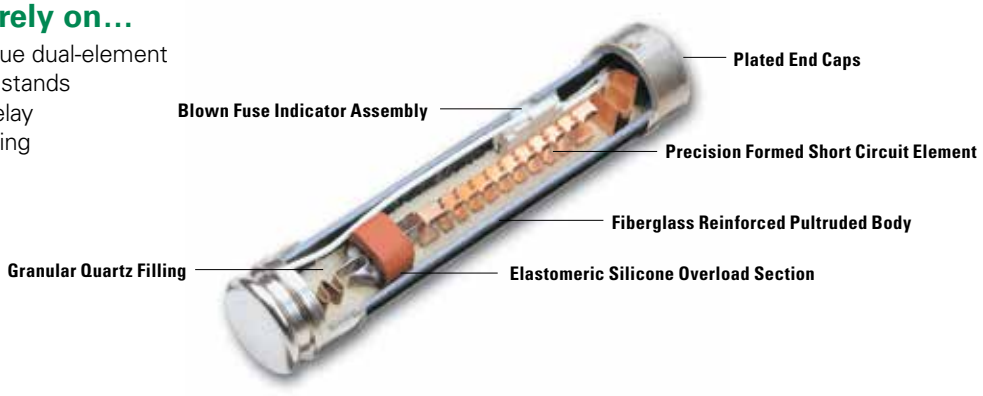

CLASS RK1 – KLNR / KLSR SERIES FUSES

250/600 V ac • Fast-Acting • 1–600 A



Description

KLSR and KLNR series are en economical design providing the safety of a RK1 fuse. The single element design provides fast-acting overload and short-circuit protection.

Use POWR-PRO® LLNRK and LLSRK series RK1, dual-element, time-delay fuses in all new applications requiring the current-limiting ability of UL Class RK1 fuses or in existing applications where fast-acting RK1 or RK5 fuses have been opening on harmless system surges such as motor starting currents.

Applications

- Resistance heaters
- Lighting circuits
- Non-inductive loads

Features/Benefits

- Extremely Current-Limiting
- Indicating and DIN mount fuse blocks available

Specifications

Voltage Ratings	AC: 600 V ac or less (KLSR) 250 V ac or less (KLNR) DC: 250 V (1 – 30 A KLSR); 300 V (35 – 600 A KLSR) 125 V (KLNR)
Ampere Range	1 – 600 A
Interrupting Ratings	AC: 200 kA rms symmetrical DC: 20 kA
Approvals	AC: Standard 248-12, Class RK1 UL Listed (File: E81895) CSA Certified (File: LR29862) DC: Littelfuse self-certified
Material	1–60 A: Composite body, Bronze cap (nickel plated) 70-100 A: Composite body, Copper caps 110-600 A: Melamine body, Copper caps
Country of Origin	Mexico

Ordering Information

AMPERE RATINGS				
1	10	40	100	250
2	12	45	110	300
3	15	50	125	350
4	20	60	150	400
5	25	70	175	450
6	30	80	200	500
8	35	90	225	600

VOLTAGE	SERIES	AMP	CATALOG NUMBER	ORDERING NUMBER
600	KLSR	90	KLSR090	KLSR090.V
250	KLNR	90	KLNR090	KLNR090.V

Web Resources

Download TC Curves, CAD drawings and other technical information: **littelfuse.com/klsr**
littelfuse.com/klnr

Recommended Fuse Blocks

LFR Series

Dimensions

Please refer to the Class R dimensions

Peak Let-Thru Curve (600 V)

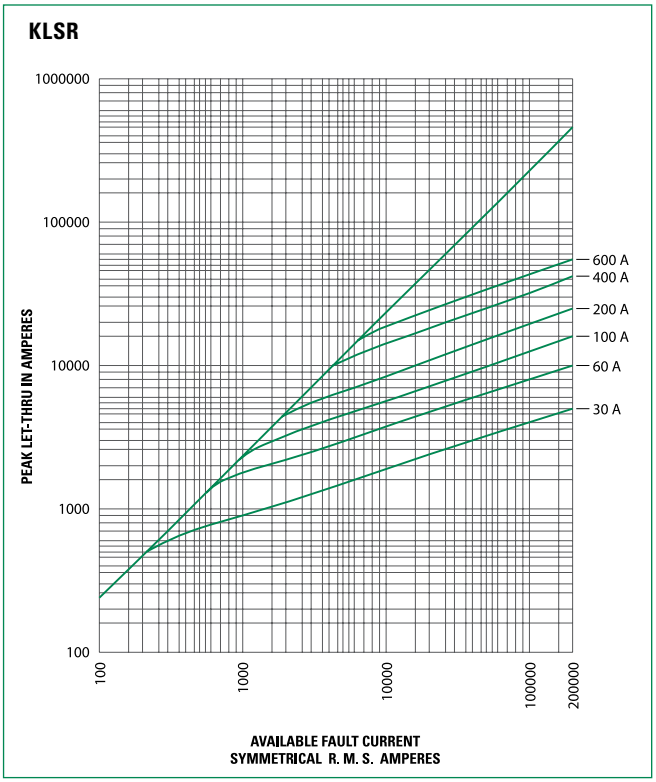

 © 2023 Littelfuse, Inc.

CLASS RK5 – IDSR SERIES

600 V ac/dc • Dual Element • Time Delay • 1/10–600 A • Indicating



Description

The IDSR series combines a 600 V dc capability with indication to provide an ideal solution for many dc applications.

Features & Benefits

FEATURES	BENEFITS
Excellent short-circuit protection	Improve safety through faster response to fault currents
Dual-element design	Provides advanced short circuit and overload protection
Current limiting	Restricts fault currents to provide a high degree of circuit protection.
Visual Blown Fuse Indication	Indication window turns black allowing fast and easy identification of the fuse that needs replacement.

Applications

- Dc circuits
- Solar inverters
- Motors
- Transformers
- Solenoids
- Fluorescent lighting

Specifications

Voltage Rating	Ac: 600 V Dc: 600 V
Interrupting Ratings	Ac: 200 kA rms symmetrical; 300 kA rms symmetrical (Littelfuse self-certified) Dc: 20 kA
Ampere Range	1/10–600 A
Applicable Standards	UL 248-12, Class RK5

Certification & Compliance

UL	UL Listed (File: E81895)
CSA	CSA Certified (File: LR29862)

© 2023 Littelfuse, Inc.

CLASS RK5 – IDSR SERIES

Accessories

LFR60 series fuse holder

Ordering Information

AMPERE RATING	CATALOG NUMBER	PRODUCT MARKING	PACKING QUANTITY	ORDERING NUMBER	UPC CODE
1/10	IDSR.100	IDSR 1/10	10	IDSR.100T	07945801523
15/100	IDSR.150	IDSR 15/100	10	IDSR.150T	07945801524
2/10	IDSR.200	IDSR 2/10	10	IDSR.200T	07945801525
1/4	IDSR.250	IDSR 1/4	10	IDSR.250T	07945801526
3/10	IDSR.300	IDSR 3/10	10	IDSR.300T	07945801527
4/10	IDSR.400	IDSR 4/10	10	IDSR.400T	07945801528
1/2	IDSR.500	IDSR 1/2	10	IDSR.500T	07945801529
6/10	IDSR.600	IDSR 6/10	10	IDSR.600T	07945801530
8/10	IDSR.800	IDSR 8/10	10	IDSR.800T	07945801531
1	IDSR001	IDSR 1	10	IDSR001.T	07945801532
1 1/8	IDSR1.12	IDSR 1 1/8	10	IDSR1.12T	07945801533
1 1/4	IDSR1.25	IDSR 1 1/4	10	IDSR1.25T	07945801534
1 4/10	IDSR01.4	IDSR 1 4/10	10	IDSR01.4T	07945801535
1 1/2	IDSR01.5	IDSR 1 1/2	10	IDSR01.5T	07945801536
1 6/10	IDSR01.6	IDSR 1 6/10	10	IDSR01.6T	07945801537
1 8/10	IDSR01.8	IDSR 1 8/10	10	IDSR01.8T	07945801538
2	IDSR002	IDSR 2	10	IDSR002.T	07945801539
2 1/4	IDSR2.25	IDSR 2 1/4	10	IDSR2.25T	07945801540
2 1/2	IDSR02.5	IDSR 2 1/2	10	IDSR02.5T	07945801541
2 8/10	IDSR02.8	IDSR 2 8/10	10	IDSR02.8T	07945801542
3	IDSR003	IDSR 3	10	IDSR003.T	07945801543
3 2/10	IDSR03.2	IDSR 3 2/10	10	IDSR03.2T	07945801544
3 1/2	IDSR03.5	IDSR 3 1/2	10	IDSR03.5T	07945801545
4	IDSR004	IDSR 4	10	IDSR004.T	07945801546
4 1/2	IDSR04.5	IDSR 4 1/2	10	IDSR04.5T	07945801547
5	IDSR005	IDSR 5	10	IDSR005.T	07945801548
5 6/10	IDSR05.6	IDSR 5 6/10	10	IDSR05.6T	07945801549
6	IDSR006	IDSR 6	10	IDSR006.T	07945801550
6 1/4	IDSR6.25	IDSR 6 1/4	10	IDSR6.25T	07945801551
7	IDSR007	IDSR 7	10	IDSR007.T	07945801552
7 1/2	IDSR07.5	IDSR 7 1/2	10	IDSR07.5T	07945801553
8	IDSR008	IDSR 8	10	IDSR008.T	07945801554
9	IDSR009	IDSR 9	10	IDSR009.T	07945801555
10	IDSR010	IDSR 10	10	IDSR010.T	07945801556
12	IDSR012	IDSR 12	10	IDSR012.T	07945801557
15	IDSR015	IDSR 15	10	IDSR015.T	07945801558
17 1/2	IDSR17.5	IDSR 17 1/2	10	IDSR17.5T	07945801559

© 2023 Littelfuse, Inc.

CLASS RK5 – IDSR SERIES

Ordering Information (cont.)

AMPERE RATING	CATALOG NUMBER	PRODUCT MARKING	PACKING QUANTITY	ORDERING NUMBER	UPC CODE
20	IDSR020	IDSR 20	10	IDSR020.T	07945801560
25	IDSR025	IDSR 25	10	IDSR025.T	07945801561
30	IDSR030	IDSR 30	10	IDSR030.T	07945801562
35	IDSR035	IDSR 35	10	IDSR035.T	07945801563
40	IDSR040	IDSR 40	10	IDSR040.T	07945801564
45	IDSR045	IDSR 45	10	IDSR045.T	07945801565
50	IDSR050	IDSR 50	10	IDSR050.T	07945801566
60	IDSR060	IDSR 60	10	IDSR060.T	07945801567
70	IDSR070	IDSR 70	5	IDSR070.V	07945801568
75	IDSR075	IDSR 75	5	IDSR075.V	07945801569
80	IDSR080	IDSR 80	5	IDSR080.V	07945801570
90	IDSR090	IDSR 90	5	IDSR090.V	07945801571
100	IDSR100	IDSR 100	5	IDSR100.V	07945801572
110	IDSR110	IDSR 110	1	IDSR110.X	07945801573
125	IDSR125	IDSR 125	1	IDSR125.X	07945801574
150	IDSR150	IDSR 150	1	IDSR150.X	07945801575
175	IDSR175	IDSR 175	1	IDSR175.X	07945801576
200	IDSR200	IDSR 200	1	IDSR200.X	07945801577
225	IDSR225	IDSR 225	1	IDSR225.X	07945801578
250	IDSR250	IDSR 250	1	IDSR250.X	07945801579
300	IDSR300	IDSR 300	1	IDSR300.X	07945801580
350	IDSR350	IDSR 350	1	IDSR350.X	07945801581
400	IDSR400	IDSR 400	1	IDSR400.X	07945801582
450	IDSR450	IDSR 450	1	IDSR450.X	07945801583
500	IDSR500	IDSR 500	1	IDSR500.X	07945801584
600	IDSR600	IDSR 600	1	IDSR600.X	07945801585

© 2023 Littelfuse, Inc.

CLASS RK5 – IDSR SERIES

Dimensions

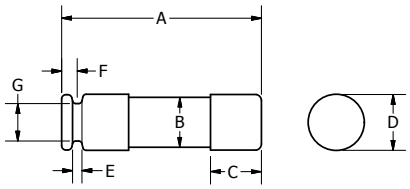

FIG. 1

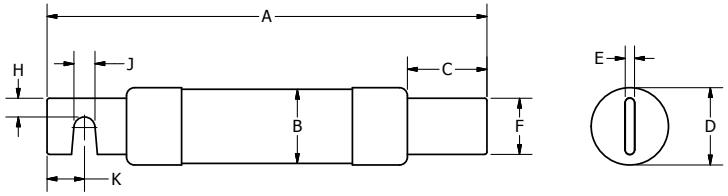

FIG. 2

AMPS	FIGURE NUMBER	DIMENSIONS INCHES (MM)									
		A	B	C	D	E	F	G	H	J	K
1/10–30	1	5 (127.0)	0.76 (19.2)	0.63 (15.9)	0.81 (20.7)	0.09 (2.4)	0.19 (4.7)	0.61 (15.5)	-	-	-
35–60	1	5.50 (139.7)	1 (25.1)	0.63 (15.9)	1.06 (27.0)	0.09 (2.4)	0.25 (6.4)	0.88 (22.2)	-	-	-
70–100	2	7.88 (200.0)	1.24 (31.5)	1.06 (27.0)	1.28 (32.6)	0.13 (3.2)	0.75 (19.1)	-	0.25 (6.4)	0.28 (7.1)	0.50 (12.7)
110–200	2	9.63 (244.5)	1.74 (44.2)	1.47 (37.3)	1.79 (45.4)	0.19 (4.8)	1.13 (28.6)	-	0.44 (11.1)	0.28 (7.1)	0.69 (17.5)
225–400	2	11.63 (295.3)	2.50 (63.1)	2 (50.8)	2.54 (64.6)	0.25 (6.4)	1.63 (41.3)	-	0.63 (15.9)	0.41 (10.3)	0.95 (24.0)
450–600	2	13.38 (339.7)	3 (76.0)	2.41 (61.1)	3.04 (77.3)	0.25 (6.4)	2 (50.8)	-	0.75 (19.1)	0.53 (13.5)	1.13 (28.6)

Current-Limiting Effects of IDSR Fuses

SHORT CIRCUIT CURRENT*	APPARENT RMS SYMMETRICAL CURRENT FOR VARIOUS FUSE RATINGS						
	15 A	30 A	60 A	100 A	200 A	400 A	600 A
5,000	800	1,100	2,100	3,200	5,000	5,000	5,000
10,000	1,100	1,600	2,900	4,300	7,300	10,000	10,000
15,000	1,300	1,900	3,400	5,000	8,600	13,700	15,000
20,000	1,400	2,200	3,800	5,600	9,500	15,500	19,000
25,000	1,500	2,500	4,100	6,100	10,300	16,700	21,500
30,000	1,600	2,700	4,500	6,500	11,000	17,700	23,500
35,000	1,700	2,900	4,700	6,800	11,600	18,600	25,200
40,000	1,800	3,100	5,000	7,200	12,100	19,400	26,600
50,000	1,900	3,400	5,400	7,800	13,100	20,800	29,500
60,000	2,000	3,600	5,800	8,300	13,900	22,000	30,600
80,000	2,200	4,000	6,300	9,100	15,400	24,000	33,200
100,000	2,300	4,200	6,800	9,800	16,700	25,500	35,100
150,000	2,600	4,500	7,700	11,200	19,300	28,100	38,000
200,000	2,800	4,600	8,400	12,400	21,400	30,000	39,600

*Prospective RMS Symmetrical Amperes Short-Circuit Current
Note: Data Derived from Peak Let-Thru Curves

© 2023 Littelfuse, Inc.

CLASS RK5 – FLNR SERIES

250 V ac • Dual Element • Time Delay • 1/10–600 A



Description

The FLNR series sets the standard for general purpose fuses. The dual-element design provides advanced short circuit and overload protection.

Also available in indicating version, see FLNR_ID series.

Features & Benefits

FEATURES	BENEFITS
Dual-element design	Provides advanced short circuit and overload protection
Current limiting	Restricts fault currents to provide a high degree of circuit protection.

Applications

- Service entrance switches
  Transformers
  Switchboard mains and feeders
- Motor control central mains and motor branch circuits
- All general purpose circuits

Specifications

Voltage Rating	Ac: 250 V Dc: 125 V
Interrupting Ratings	Ac: 200 kA rms symmetrical; 300 kA rms symmetrical (Littelfuse self-certified) Dc: 20 kA
Ampere Range	1/10–600 A
Applicable Standards	UL 248-12, Class RK5

© 2023 Littelfuse, Inc.

CLASS RK5 – FLNR SERIES

Certification & Compliance

UL	UL Listed (File: E81895)
CSA	CSA Certified (File: LR29862)

Accessories

LFR25 series fuse holder

Ordering Information

AMPERE RATING	CATALOG NUMBER	PRODUCT MARKING	PACKING QUANTITY	ORDERING NUMBER	UPC CODE
1/10	FLNR.100	FLNR 1/10A	10	FLNR.100T	07945815011
1/8	FLNR.125	FLNR 1/8A	10	FLNR.125T	07945815012
15/100	FLNR.150	FLNR 15/100A	10	FLNR.150T	07945815013
2/10	FLNR.200	FLNR 2/10A	10	FLNR.200T	07945815018
1/4	FLNR.250	FLNR 1/4A	10	FLNR.250T	07945815019
3/10	FLNR.300	FLNR 3/10A	10	FLNR.300T	07945800086
4/10	FLNR.400	FLNR 4/10A	10	FLNR.400T	07945815023
1/2	FLNR.500	FLNR 1/2A	10	FLNR.500T	07945815024
6/10	FLNR.600	FLNR 6/10A	10	FLNR.600T	07945800087
8/10	FLNR.800	FLNR 8/10A	10	FLNR.800T	07945800088
1	FLNR001	FLNR 1A	10	FLNR001.T	07945815031
1 1/8	FLNR1.12	FLNR 1 1/8A	10	FLNR1.12T	07945815032
1 1/4	FLNR1.25	FLNR 1 1/4A	10	FLNR1.25T	07945815034
1 4/10	FLNR01.4	FLNR 1 4/10A	10	FLNR01.4T	07945815036
1 1/2	FLNR01.5	FLNR 1 1/2A	10	FLNR01.5T	07945815037
1 6/10	FLNR01.6	FLNR 1 6/10A	10	FLNR01.6T	07945815038
1 8/10	FLNR01.8	FLNR 1 8/10A	10	FLNR01.8T	07945815040
2	FLNR002	FLNR 2A	10	FLNR002.T	07945815041
2 1/4	FLNR2.25	FLNR 2 1/4A	10	FLNR2.25T	07945815042
2 1/2	FLNR02.5	FLNR 2 1/2A	10	FLNR02.5T	07945815043
2 8/10	FLNR02.8	FLNR 2 8/10A	10	FLNR02.8T	07945815046
3	FLNR003	FLNR 3A	10	FLNR003.T	07945815047
3 2/10	FLNR03.2	FLNR 3 2/10A	10	FLNR03.2T	07945815049
3 1/2	FLNR03.5	FLNR 3 1/2A	10	FLNR03.5T	07945815051
4	FLNR004	FLNR 4A	10	FLNR004.T	07945815053
4 1/2	FLNR04.5	FLNR 4 1/2A	10	FLNR04.5T	07945815054
5	FLNR005	FLNR 5A	10	FLNR005.T	07945815055
5 6/10	FLNR05.6	FLNR 5 6/10A	10	FLNR05.6T	07945815056
6	FLNR006	FLNR 6A	10	FLNR006.T	07945815058
6 1/4	FLNR6.25	FLNR 6 1/4A	10	FLNR6.25T	07945815059
7	FLNR007	FLNR 7A	10	FLNR007.T	07945815061

© 2023 Littelfuse, Inc.

CLASS RK5 – FLNR SERIES

Ordering Information (cont.)

AMPERE RATING	CATALOG NUMBER	PRODUCT MARKING	PACKING QUANTITY	ORDERING NUMBER	UPC CODE
7½	FLNR07.5	FLNR 7½A	10	FLNR07.5T	07945815062
8	FLNR008	FLNR 8A	10	FLNR008.T	07945815063
9	FLNR009	FLNR 9A	10	FLNR009.T	07945815064
10	FLNR010	FLNR 10A	10	FLNR010.T	07945815065
12	FLNR012	FLNR 12A	10	FLNR012.T	07945815066
15	FLNR015	FLNR 15A	10	FLNR015.T	07945815068
17½	FLNR17.5	FLNR 17½A	10	FLNR17.5T	07945815069
20	FLNR020	FLNR 20A	10	FLNR020.T	07945815071
25	FLNR025	FLNR 25A	10	FLNR025.T	07945815072
30	FLNR030	FLNR 30A	10	FLNR030.T	07945815073
35	FLNR035	FLNR 35A	10	FLNR035.T	07945815074
40	FLNR040	FLNR 40A	10	FLNR040.T	07945815075
45	FLNR045	FLNR 45A	10	FLNR045.T	07945815076
50	FLNR050	FLNR 50A	10	FLNR050.T	07945815077
60	FLNR060	FLNR 60A	10	FLNR060.T	07945815078
70	FLNR070	FLNR 70A	5	FLNR070.V	07945815079
75	FLNR075	FLNR 75A	5	FLNR075.V	07945805561
80	FLNR080	FLNR 80A	5	FLNR080.V	07945815080
90	FLNR090	FLNR 90A	5	FLNR090.V	07945815081
100	FLNR100	FLNR 100A	5	FLNR100.V	07945815082
110	FLNR110	FLNR 110A	1	FLNR110.X	07945815083
125	FLNR125	FLNR 125A	1	FLNR125.X	07945815084
150	FLNR150	FLNR 150A	1	FLNR150.X	07945815086
175	FLNR175	FLNR 175A	1	FLNR175.X	07945815087
200	FLNR200	FLNR 200A	1	FLNR200.X	07945815088
225	FLNR225	FLNR 225A	1	FLNR225.X	07945815089
250	FLNR250	FLNR 250A	1	FLNR250.X	07945815090
300	FLNR300	FLNR 300A	1	FLNR300.X	07945815091
350	FLNR350	FLNR 350A	1	FLNR350.X	07945815092
400	FLNR400	FLNR 400A	1	FLNR400.X	07945815093
450	FLNR450	FLNR 450A	1	FLNR450.X	07945815095
500	FLNR500	FLNR 500A	1	FLNR500.X	07945815096
600	FLNR600	FLNR 600A	1	FLNR600.X	07945815098

© 2023 Littelfuse, Inc.

CLASS RK5 – FLNR SERIES

Dimensions

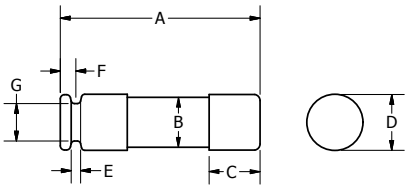

FIG. 1

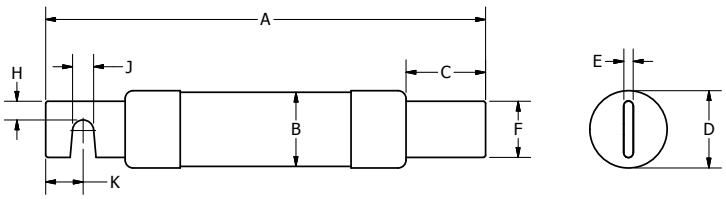

FIG. 2

AMPS	FIGURE NUMBER	DIMENSIONS INCHES (MM)									
		A	B	C	D	E	F	G	H	J	K
1/10–30	1	2.00 (50.8)	0.50 (12.7)	0.50 (12.7)	0.56 (14.3)	0.07 (1.8)	0.16 (4.0)	0.38 (9.5)	-	-	-
35–60	1	3.00 (76.2)	0.76 (19.2)	0.63 (15.9)	0.81 (20.7)	0.09 (2.4)	0.19 (4.7)	0.63 (15.9)	-	-	-
70–100	2	5.88 (149.2)	1 (25.1)	1.06 (27.0)	1.03 (26.2)	0.13 (3.2)	0.75 (19.1)	-	0.25 (6.4)	0.28 (7.1)	0.50 (12.7)
110–200	2	7.13 (181)	1.50 (37.9)	1.47 (37.3)	1.54 (39.0)	0.19 (4.8)	1.13 (28.6)	-	0.44 (11.1)	0.28 (7.1)	0.69 (17.5)
225–400	2	8.63 (219.1)	2 (50.4)	1.94 (49.2)	2.00 (50.8)	0.25 (6.4)	1.63 (41.3)	-	0.63 (15.9)	0.41 (10.3)	0.94 (23.8)
450–600	2	10.38 (263.5)	2.50 (63.1)	2.38 (60.3)	2.54 (64.6)	0.25 (6.4)	2 (50.8)	-	0.75 (19.1)	0.53 (13.5)	1.13 (28.6)

Current-Limiting Effects of FLNR Fuses

SHORT CIRCUIT CURRENT*	APPARENT RMS SYMMETRICAL CURRENT FOR VARIOUS FUSE RATINGS					
	30 A	60 A	100 A	200 A	400 A	600 A
5,000	1,400	2,100	3,100	5,000	5,000	5,000
10,000	1,550	2,500	3,900	6,500	9,500	10,000
15,000	2,000	3,150	4,400	7,250	10,500	14,000
20,000	2,250	3,400	5,000	8,250	12,000	16,000
25,000	2,400	3,750	5,250	9,000	12,500	16,500
30,000	2,550	4,100	5,600	9,500	13,500	18,000
35,000	2,650	4,300	5,800	9,750	14,000	19,000
40,000	2,800	4,400	6,250	10,250	15,000	20,000
50,000	3,000	5,000	6,500	10,500	16,000	21,000
60,000	3,200	5,250	7,000	11,500	17,000	23,000
80,000	3,400	5,750	7,500	12,500	19,000	25,500
100,000	3,850	6,000	8,000	13,500	21,000	27,500
150,000	4,100	7,000	9,000	15,200	24,000	31,500
200,000	4,300	7,500	9,750	16,500	26,000	34,000

*Prospective RMS Symmetrical Amperes Short-Circuit Current
Note: Data Derived from Peak Let-Thru Curves

© 2023 Littelfuse, Inc.

CLASS RK5 – FLNR_ID SERIES INDICATOR® FUSES

250 V ac • Dual Element • Time Delay • 35–600 A • Indicating



Description

The FLNR_ID Indicator™ fuses provide visual blown fuse indication at a glance. The patented state-of-the-art solid state design provides maximum reliability and superior performance characteristics in a true dual-element design. The use of Indicator fuses reduces down-time, nuisance opening, increases safety, and can save thousands of dollars in lost production time. The FLNR_ID series sets the standard for general purpose fuses. The dual-element design provides advanced short circuit and overload protection.

Also available in non-indicating version, see FLNR series.

Features & Benefits

FEATURES	BENEFITS
Dual-element design	Provides advanced short circuit and overload protection
Current limiting	Restricts fault currents to provide a high degree of circuit protection.
Visual Blown Fuse Indication	Indication window turns black allowing fast and easy identification of the fuse that needs replacement.

Applications

- Service entrance switches
- Transformers
- Switchboard mains and feeders
- Motor control central mains and motor branch circuits
- All general purpose circuits

Specifications

Voltage Rating	Ac: 250 V Dc: 125 V
Interrupting Ratings	Ac: 200 kA rms symmetrical; 300 kA rms symmetrical (Littelfuse self-certified) Dc: 20 kA
Ampere Range	35–600 A
Applicable Standards	UL 248-12, Class RK5

© 2023 Littelfuse, Inc.

CLASS RK5 – FLNR_ID SERIES INDICATOR® FUSES

Certification & Compliance

UL	UL Listed (File: E81895)
CSA	CSA Certified (File: LR29862)

Accessories

LFR25 series fuse holder

Ordering Information

AMPERE RATING	CATALOG NUMBER	PRODUCT MARKING	PACKING QUANTITY	ORDERING NUMBER	UPC CODE
35	FLNR035ID	FLNR 35ID	10	FLNR035.TXID	07945802380
40	FLNR040ID	FLNR 40ID	10	FLNR040.TXID	07945802381
45	FLNR045ID	FLNR 45ID	10	FLNR045.TXID	07945802382
50	FLNR050ID	FLNR 50ID	10	FLNR050.TXID	07945802383
60	FLNR060ID	FLNR 60ID	10	FLNR060.TXID	07945802384
70	FLNR070ID	FLNR 70ID	5	FLNR070.VXID	07945802385
80	FLNR080ID	FLNR 80ID	5	FLNR080.VXID	07945802386
90	FLNR090ID	FLNR 90ID	5	FLNR090.VXID	07945802387
100	FLNR100ID	FLNR 100ID	5	FLNR100.VXID	07945802388
110	FLNR110ID	FLNR 110ID	1	FLNR110.XXID	07945802389
125	FLNR125ID	FLNR 125ID	1	FLNR125.XXID	07945802390
150	FLNR150ID	FLNR 150ID	1	FLNR150.XXID	07945802391
175	FLNR175ID	FLNR 175ID	1	FLNR175.XXID	07945802392
200	FLNR200ID	FLNR 200ID	1	FLNR200.XXID	07945802393
225	FLNR225ID	FLNR 225ID	1	FLNR225.XXID	07945802394
250	FLNR250ID	FLNR 250ID	1	FLNR250.XXID	07945802395
300	FLNR300ID	FLNR 300ID	1	FLNR300.XXID	07945802396
350	FLNR350ID	FLNR 350ID	1	FLNR350.XXID	07945802397
400	FLNR400ID	FLNR 400ID	1	FLNR400.XXID	07945802398
450	FLNR450ID	FLNR 450ID	1	FLNR450.XXID	07945802399
500	FLNR500ID	FLNR 500ID	1	FLNR500.XXID	07945802400
600	FLNR600ID	FLNR 600ID	1	FLNR600.XXID	07945802401

© 2023 Littelfuse, Inc.

CLASS RK5 – FLNR_ID SERIES INDICATOR® FUSES

Dimensions

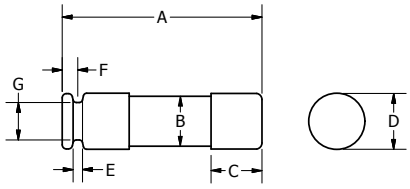

FIG. 1

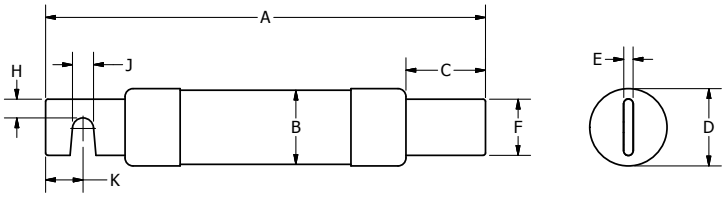

FIG. 2

AMPS	FIGURE NUMBER	DIMENSIONS INCHES (MM)									
		A	B	C	D	E	F	G	H	J	K
35–60	1	3.00 (76.2)	0.76 (19.2)	0.63 (15.9)	0.81 (20.7)	0.09 (2.4)	0.19 (4.7)	0.63 (15.9)	-	-	-
70–100	2	5.88 (149.2)	1 (25.1)	1.06 (27.0)	1.03 (26.2)	0.13 (3.2)	0.75 (19.1)	-	0.25 (6.4)	0.28 (7.1)	0.50 (12.7)
110–200	2	7.13 (181)	1.50 (37.9)	1.47 (37.3)	1.54 (39.0)	0.19 (4.8)	1.13 (28.6)	-	0.44 (11.1)	0.28 (7.1)	0.69 (17.5)
225–400	2	8.63 (219.1)	2 (50.4)	1.94 (49.2)	2.00 (50.8)	0.25 (6.4)	1.63 (41.3)	-	0.63 (15.9)	0.41 (10.3)	0.94 (23.8)
450–600	2	10.38 (263.5)	2.50 (63.1)	2.38 (60.3)	2.54 (64.6)	0.25 (6.4)	2 (50.8)	-	0.75 (19.1)	0.53 (13.5)	1.13 (28.6)

Current-Limiting Effects of FLNR_ID Fuses

SHORT CIRCUIT CURRENT*	APPARENT RMS SYMMETRICAL CURRENT FOR VARIOUS FUSE RATINGS					
	30 A	60 A	100 A	200 A	400 A	600 A
5,000	1,400	2,100	3,100	5,000	5,000	5,000
10,000	1,550	2,500	3,900	6,500	9,500	10,000
15,000	2,000	3,150	4,400	7,250	10,500	14,000
20,000	2,250	3,400	5,000	8,250	12,000	16,000
25,000	2,400	3,750	5,250	9,000	12,500	16,500
30,000	2,550	4,100	5,600	9,500	13,500	18,000
35,000	2,650	4,300	5,800	9,750	14,000	19,000
40,000	2,800	4,400	6,250	10,250	15,000	20,000
50,000	3,000	5,000	6,500	10,500	16,000	21,000
60,000	3,200	5,250	7,000	11,500	17,000	23,000
80,000	3,400	5,750	7,500	12,500	19,000	25,500
100,000	3,850	6,000	8,000	13,500	21,000	27,500
150,000	4,100	7,000	9,000	15,200	24,000	31,500
200,000	4,300	7,500	9,750	16,500	26,000	34,000

*Prospective RMS Symmetrical Amperes Short-Circuit Current
Note: Data Derived from Peak Let-Thru Curves

© 2023 Littelfuse, Inc.

CLASS RK5 – FLSR SERIES

600 V ac • Dual Element • Time Delay • 1/10–600 A



Description

Littelfuse FLSR series fuses have been the superior UL Class RK5 dual-element time-delay fuses, and are the most widely used class of fuses. FLSR series fuses provide excellent protection for all types of circuits especially those containing motors.

Also available in indicating version, see FLSR_ID series.

Features & Benefits

FEATURES	BENEFITS
Excellent short-circuit protection	Improve safety through faster response to fault currents
Dual-element design	Provides advanced short circuit and overload protection
Current limiting	Restricts fault currents to provide a high degree of circuit protection.

Applications

- Service entrance switches
- Transformers
- Switchboard mains and feeders
- Motor control central mains and motor branch circuits
- All general purpose circuits

Specifications

Voltage Rating	Ac: 600 V Dc: 300 V
Interrupting Ratings	Ac: 200 kA rms symmetrical; 300 kA rms symmetrical (Littelfuse self-certified) Dc: 20 kA
Ampere Range	1/10–600 A
Applicable Standards	UL 248-12, Class RK5

© 2023 Littelfuse, Inc.

CLASS RK5 – FLSR SERIES

Certification & Compliance

UL	UL Listed (File: E81895)
CSA	CSA Certified (File: LR29862)

Accessories

LFR60 series fuse holder

Ordering Information

AMPERE RATING	CATALOG NUMBER	PRODUCT MARKING	PACKING QUANTITY	ORDERING NUMBER	UPC CODE
1/10	FLSR.100	FLSR 1/10A	10	FLSR.100T	07945817011
15/100	FLSR.150	FLSR 15/100A	10	FLSR.150T	07945817013
2/10	FLSR.200	FLSR 2/10A	10	FLSR.200T	07945817018
1/4	FLSR.250	FLSR 1/4A	10	FLSR.250T	07945817019
3/10	FLSR.300	FLSR 3/10A	10	FLSR.300T	07945800092
4/10	FLSR.400	FLSR 4/10A	10	FLSR.400T	07945817023
1/2	FLSR.500	FLSR 1/2A	10	FLSR.500T	07945817024
6/10	FLSR.600	FLSR 6/10A	10	FLSR.600T	07945800093
8/10	FLSR.800	FLSR 8/10A	10	FLSR.800T	07945800094
1	FLSR001	FLSR 1A	10	FLSR001.T	07945817031
1 1/8	FLSR1.12	FLSR 1 1/8A	10	FLSR1.12T	07945817032
1 1/4	FLSR1.25	FLSR 1 1/4A	10	FLSR1.25T	07945817034
1 4/10	FLSR01.4	FLSR 1 4/10A	10	FLSR01.4T	07945817036
1 1/2	FLSR01.5	FLSR 1 1/2A	10	FLSR01.5T	07945817037
1 6/10	FLSR01.6	FLSR 1 6/10A	10	FLSR01.6T	07945817038
1 8/10	FLSR01.8	FLSR 1 8/10A	10	FLSR01.8T	07945817040
2	FLSR002	FLSR 2A	10	FLSR002.T	07945817041
2 1/4	FLSR2.25	FLSR 2 1/4A	10	FLSR2.25T	07945817042
2 1/2	FLSR02.5	FLSR 2 1/2A	10	FLSR02.5T	07945817043
2 8/10	FLSR02.8	FLSR 2 8/10A	10	FLSR02.8T	07945817046
3	FLSR003	FLSR 3A	10	FLSR003.T	07945817047
3 2/10	FLSR03.2	FLSR 3 2/10A	10	FLSR03.2T	07945817049
3 1/2	FLSR03.5	FLSR 3 1/2A	10	FLSR03.5T	07945817051
4	FLSR004	FLSR 4A	10	FLSR004.T	07945817053
4 1/2	FLSR04.5	FLSR 4 1/2A	10	FLSR04.5T	07945817054
5	FLSR005	FLSR 5A	10	FLSR005.T	07945817055
5 6/10	FLSR05.6	FLSR 5 6/10A	10	FLSR05.6T	07945817056
6	FLSR006	FLSR 6A	10	FLSR006.T	07945817058
6 1/4	FLSR6.25	FLSR 6 1/4A	10	FLSR6.25T	07945817059
7	FLSR007	FLSR 7A	10	FLSR007.T	07945817061
7 1/2	FLSR07.5	FLSR 7 1/2A	10	FLSR07.5T	07945817062

© 2023 Littelfuse, Inc.

CLASS RK5 – FLSR SERIES

Ordering Information (cont.)

AMPERE RATING	CATALOG NUMBER	PRODUCT MARKING	PACKING QUANTITY	ORDERING NUMBER	UPC CODE
8	FLSR008	FLSR 8A	10	FLSR008.T	07945817063
9	FLSR009	FLSR 9A	10	FLSR009.T	07945817064
10	FLSR010	FLSR 10A	10	FLSR010.T	07945817065
12	FLSR012	FLSR 12A	10	FLSR012.T	07945817066
15	FLSR015	FLSR 15A	10	FLSR015.T	07945817068
17½	FLSR17.5	FLSR 17½A	10	FLSR17.5T	07945817069
20	FLSR020	FLSR 20A	10	FLSR020.T	07945817071
25	FLSR025	FLSR 25A	10	FLSR025.T	07945817072
30	FLSR030	FLSR 30A	10	FLSR030.T	07945817073
35	FLSR035	FLSR 35A	10	FLSR035.T	07945817074
40	FLSR040	FLSR 40A	10	FLSR040.T	07945817075
45	FLSR045	FLSR 45A	10	FLSR045.T	07945817076
50	FLSR050	FLSR 50A	10	FLSR050.T	07945817077
60	FLSR060	FLSR 60A	10	FLSR060.T	07945817078
70	FLSR070	FLSR 70A	5	FLSR070.V	07945817079
75	FLSR075	FLSR 75A	5	FLSR075.V	07945800217
80	FLSR080	FLSR 80A	5	FLSR080.V	07945817080
90	FLSR090	FLSR 90A	5	FLSR090.V	07945817081
100	FLSR100	FLSR 100A	5	FLSR100.V	07945817082
110	FLSR110	FLSR 110A	1	FLSR110.X	07945817083
125	FLSR125	FLSR 125A	1	FLSR125.X	07945817084
150	FLSR150	FLSR 150A	1	FLSR150.X	07945817086
175	FLSR175	FLSR 175A	1	FLSR175.X	07945817087
200	FLSR200	FLSR 200A	1	FLSR200.X	07945817088
225	FLSR225	FLSR 225A	1	FLSR225.X	07945817089
250	FLSR250	FLSR 250A	1	FLSR250.X	07945817090
300	FLSR300	FLSR 300A	1	FLSR300.X	07945817091
350	FLSR350	FLSR 350A	1	FLSR350.X	07945817092
400	FLSR400	FLSR 400A	1	FLSR400.X	07945817093
450	FLSR450	FLSR 450A	1	FLSR450.X	07945817095
500	FLSR500	FLSR 500A	1	FLSR500.X	07945817096
600	FLSR600	FLSR 600A	1	FLSR600.X	07945817098

© 2023 Littelfuse, Inc.

CLASS RK5 – FLSR SERIES

Dimensions

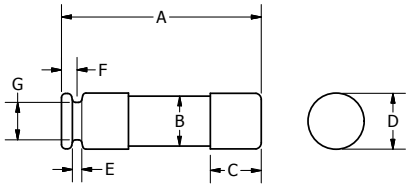

FIG. 1

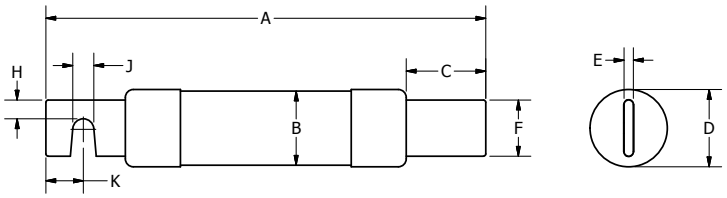

FIG. 2

AMPS	FIGURE NUMBER	DIMENSIONS INCHES (MM)									
		A	B	C	D	E	F	G	H	J	K
1/10–30	1	5 (127.0)	0.76 (19.2)	0.63 (15.9)	0.81 (20.7)	0.09 (2.4)	0.19 (4.7)	0.61 (15.5)	-	-	-
35–60	1	5.50 (139.7)	1 (25.1)	0.63 (15.9)	1.06 (27.0)	0.09 (2.4)	0.25 (6.4)	0.88 (22.2)	-	-	-
70–100	2	7.88 (200.0)	1.24 (31.5)	1.06 (27.0)	1.28 (32.6)	0.13 (3.2)	0.75 (19.1)	-	0.25 (6.4)	0.28 (7.1)	0.50 (12.7)
110–200	2	9.63 (244.5)	1.74 (44.2)	1.47 (37.3)	1.79 (45.4)	0.19 (4.8)	1.13 (28.6)	-	0.44 (11.1)	0.28 (7.1)	0.69 (17.5)
225–400	2	11.63 (295.3)	2.50 (63.1)	2 (50.8)	2.54 (64.6)	0.25 (6.4)	1.63 (41.3)	-	0.63 (15.9)	0.41 (10.3)	0.95 (24.0)
450–600	2	13.38 (339.7)	3 (76.0)	2.41 (61.1)	3.04 (77.3)	0.25 (6.5)	2 (50.8)	-	0.75 (19.1)	0.53 (13.5)	1.13 (28.6)

Current-Limiting Effects of FLSR Fuses

SHORT CIRCUIT CURRENT*	APPARENT RMS SYMMETRICAL CURRENT FOR VARIOUS FUSE RATINGS					
	30 A	60 A	100 A	200 A	400 A	600 A
5,000	1,250	2,100	3,200	5,000	5,000	5,000
10,000	1,600	2,850	4,300	7,250	10,000	10,000
15,000	1,800	3,400	5,000	8,500	13,500	15,000
20,000	2,250	3,800	5,500	9,500	15,750	19,000
25,000	2,450	4,100	5,700	10,250	17,000	21,000
30,000	2,700	4,500	6,400	10,750	18,000	23,000
35,000	2,900	4,800	6,700	11,500	19,000	24,250
40,000	3,000	5,000	7,250	12,000	19,500	27,000
50,000	3,400	5,250	7,750	13,000	21,000	29,000
60,000	3,600	5,750	8,100	14,000	22,000	30,500
80,000	3,900	6,250	9,000	15,000	24,000	33,000
100,000	4,300	6,750	9,750	16,500	26,000	35,000
150,000	4,500	7,600	11,100	19,000	28,000	38,000
200,000	4,600	8,400	12,250	21,500	30,000	40,000

*Prospective RMS Symmetrical Amperes Short-Circuit Current
Note: Data Derived from Peak Let-Thru Curves

© 2023 Littelfuse, Inc.

CLASS RK5 – FLSR_ID SERIES INDICATOR® FUSES

600 V ac • Dual Element • Time Delay • 1/10–600 A • Indicating



Description

Littelfuse FLSR_ID Indicator™ fuses provide visual blown fuse indication at a glance. The patented state-of-the-art solid state design provides maximum reliability and superior performance characteristics in a true dual-element design. The use of Indicator fuses reduces down-time, nuisance opening, increases safety, and can save thousands of dollars in lost production time. The FLSR_ID series fuses provide excellent protection for all types of circuits especially those containing motors.

Also available in non-indicating version, see FLSR series.

Features & Benefits

FEATURES	BENEFITS
Excellent short-circuit protection	Improve safety through faster response to fault currents
Dual-element design	Provides advanced short circuit and overload protection
Current limiting	Restricts fault currents to provide a high degree of circuit protection.
Visual Blown Fuse Indication	Indication window turns black allowing fast and easy identification of the fuse that needs replacement.

Applications

- Service entrance switches
- Transformers
- Switchboard mains and feeders
- Motor control central mains and motor branch circuits
- All general purpose circuits

Specifications

Voltage Rating	Ac: 600 V Dc: 300 V
Interrupting Ratings	Ac: 200 kA rms symmetrical; 300 kA rms symmetrical (Littelfuse self-certified) Dc: 20 kA
Ampere Range	1/10–600 A
Applicable Standards	UL 248-12, Class RK5

© 2023 Littelfuse, Inc.

CLASS RK5 – FLSR_ID SERIES INDICATOR® FUSES

Certification & Compliance

UL	UL Listed (File: E81895)
CSA	CSA Certified (File: LR29862)

Accessories

LFR60 series fuse holder

Ordering Information

AMPERE RATING	CATALOG NUMBER	PRODUCT MARKING	PACKING QUANTITY	ORDERING NUMBER	UPC CODE
1/10	FLSR.100ID	FLSR 1/10ID	10	FLSR.100TXID	07945802501
15/100	FLSR.150ID	FLSR 15/100ID	10	FLSR.150TXID	07945802502
2/10	FLSR.200ID	FLSR 2/10ID	10	FLSR.200TXID	07945802503
1/4	FLSR.250ID	FLSR 1/4ID	10	FLSR.250TXID	07945802504
3/10	FLSR.300ID	FLSR 3/10ID	10	FLSR.300TXID	07945802505
4/10	FLSR.400ID	FLSR 4/10ID	10	FLSR.400TXID	07945802506
1/2	FLSR.500ID	FLSR 1/2ID	10	FLSR.500TXID	07945802507
6/10	FLSR.600ID	FLSR 6/10ID	10	FLSR.600TXID	07945802508
8/10	FLSR.800ID	FLSR 8/10ID	10	FLSR.800TXID	07945802509
1	FLSR001ID	FLSR 1ID	10	FLSR001.TXID	07945802510
1 1/8	FLSR1.12ID	FLSR 1 1/8ID	10	FLSR1.12TXID	07945802511
1 1/4	FLSR1.25ID	FLSR 1 1/4ID	10	FLSR1.25TXID	07945802512
1 4/10	FLSR01.4ID	FLSR 1 4/10ID	10	FLSR01.4TXID	07945802513
1 1/2	FLSR01.5ID	FLSR 1 1/2ID	10	FLSR01.5TXID	07945802514
1 6/10	FLSR01.6ID	FLSR 1 6/10ID	10	FLSR01.6TXID	07945802515
1 8/10	FLSR01.8ID	FLSR 1 8/10ID	10	FLSR01.8TXID	07945802516
2	FLSR002ID	FLSR 2ID	10	FLSR002.TXID	07945802517
2 1/4	FLSR2.25ID	FLSR 2 1/4ID	10	FLSR2.25TXID	07945802518
2 1/2	FLSR02.5ID	FLSR 2 1/2ID	10	FLSR02.5TXID	07945802519
2 8/10	FLSR02.8ID	FLSR 2 8/10ID	10	FLSR02.8TXID	07945802520
3	FLSR003ID	FLSR 3ID	10	FLSR003.TXID	07945802521
3 2/10	FLSR03.2ID	FLSR 3 2/10ID	10	FLSR03.2TXID	07945802522
3 1/2	FLSR03.5ID	FLSR 3 1/2ID	10	FLSR03.5TXID	07945802523
4	FLSR004ID	FLSR 4ID	10	FLSR004.TXID	07945802524
4 1/2	FLSR04.5ID	FLSR 4 1/2ID	10	FLSR04.5TXID	07945802525
5	FLSR005ID	FLSR 5ID	10	FLSR005.TXID	07945802526
5 6/10	FLSR05.6ID	FLSR 5 6/10ID	10	FLSR05.6TXID	07945802527
6	FLSR006ID	FLSR 6ID	10	FLSR006.TXID	07945802528
6 1/4	FLSR6.25ID	FLSR 6 1/4ID	10	FLSR6.25TXID	07945802529
7	FLSR007ID	FLSR 7ID	10	FLSR007.TXID	07945802530
7 1/2	FLSR07.5ID	FLSR 7 1/2ID	10	FLSR07.5TXID	07945802531

© 2023 Littelfuse, Inc.

CLASS RK5 – FLSR_ID SERIES INDICATOR® FUSES

Ordering Information (cont.)

AMPERE RATING	CATALOG NUMBER	PRODUCT MARKING	PACKING QUANTITY	ORDERING NUMBER	UPC CODE
8	FLSR008ID	FLSR 8ID	10	FLSR008.TXID	07945802532
9	FLSR009ID	FLSR 9ID	10	FLSR009.TXID	07945802533
10	FLSR010ID	FLSR 10ID	10	FLSR010.TXID	07945802534
12	FLSR012ID	FLSR 12ID	10	FLSR012.TXID	07945802535
15	FLSR015ID	FLSR 15ID	10	FLSR015.TXID	07945802536
17½	FLSR17.5ID	FLSR 17½ID	10	FLSR17.5TXID	07945802537
20	FLSR020ID	FLSR 20ID	10	FLSR020.TXID	07945802538
25	FLSR025ID	FLSR 25ID	10	FLSR025.TXID	07945802539
30	FLSR030ID	FLSR 30ID	10	FLSR030.TXID	07945802540
35	FLSR035ID	FLSR 35ID	10	FLSR035.TXID	07945802541
40	FLSR040ID	FLSR 40ID	10	FLSR040.TXID	07945802542
45	FLSR045ID	FLSR 45ID	10	FLSR045.TXID	07945802543
50	FLSR050ID	FLSR 50ID	10	FLSR050.TXID	07945802544
60	FLSR060ID	FLSR 60ID	10	FLSR060.TXID	07945802545
70	FLSR070ID	FLSR 70ID	5	FLSR070.VXID	07945802546
75	FLSR075ID	FLSR 75ID	5	FLSR075.VXID	07945802547
80	FLSR080ID	FLSR 80ID	5	FLSR080.VXID	07945802548
90	FLSR090ID	FLSR 90ID	5	FLSR090.VXID	07945802549
100	FLSR100ID	FLSR 100ID	5	FLSR100.VXID	07945802550
110	FLSR110ID	FLSR 110ID	1	FLSR110.XXID	07945802551
125	FLSR125ID	FLSR 125ID	1	FLSR125.XXID	07945802552
150	FLSR150ID	FLSR 150ID	1	FLSR150.XXID	07945802553
175	FLSR175ID	FLSR 175ID	1	FLSR175.XXID	07945802554
200	FLSR200ID	FLSR 200ID	1	FLSR200.XXID	07945802555
225	FLSR225ID	FLSR 225ID	1	FLSR225.XXID	07945802556
250	FLSR250ID	FLSR 250ID	1	FLSR250.XXID	07945802557
300	FLSR300ID	FLSR 300ID	1	FLSR300.XXID	07945802558
350	FLSR350ID	FLSR 350ID	1	FLSR350.XXID	07945802559
400	FLSR400ID	FLSR 400ID	1	FLSR400.XXID	07945802560
450	FLSR450ID	FLSR 450ID	1	FLSR450.XXID	07945802561
500	FLSR500ID	FLSR 500ID	1	FLSR500.XXID	07945802562
600	FLSR600ID	FLSR 600ID	1	FLSR600.XXID	07945802563

© 2023 Littelfuse, Inc.

CLASS RK5 – FLSR_ID SERIES INDICATOR® FUSES

Dimensions

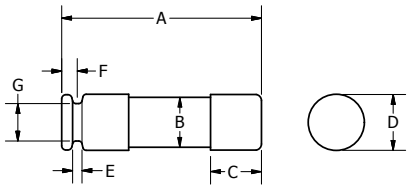

FIG. 1

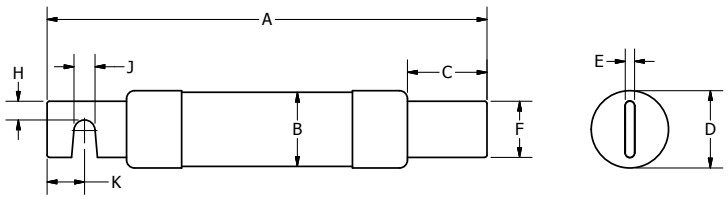

FIG. 2

AMPS	FIGURE NUMBER	DIMENSIONS INCHES (MM)									
		A	B	C	D	E	F	G	H	J	K
1/10–30	1	5 (127.0)	0.76 (19.2)	0.63 (15.9)	0.81 (20.7)	0.09 (2.4)	0.19 (4.7)	0.61 (15.5)	-	-	-
35–60	1	5.50 (139.7)	1 (25.1)	0.63 (15.9)	1.06 (27.0)	0.09 (2.4)	0.25 (6.4)	0.88 (22.2)	-	-	-
70–100	2	7.88 (200.0)	1.24 (31.5)	1.06 (27.0)	1.28 (32.6)	0.13 (3.2)	0.75 (19.1)	-	0.25 (6.4)	0.28 (7.1)	0.50 (12.7)
110–200	2	9.63 (244.5)	1.74 (44.2)	1.47 (37.3)	1.79 (45.4)	0.19 (4.8)	1.13 (28.6)	-	0.44 (11.1)	0.28 (7.1)	0.69 (17.5)
225–400	2	11.63 (295.3)	2.50 (63.1)	2 (50.8)	2.54 (64.6)	0.25 (6.4)	1.63 (41.3)	-	0.63 (15.9)	0.41 (10.3)	0.95 (24.0)
450–600	2	13.38 (339.7)	3 (76.0)	2.41 (61.1)	3.04 (77.3)	0.25 (6.5)	2 (50.8)	-	0.75 (19.1)	0.53 (13.5)	1.13 (28.6)

Current-Limiting Effects of FLSR_ID Fuses

SHORT CIRCUIT CURRENT*	APPARENT RMS SYMMETRICAL CURRENT FOR VARIOUS FUSE RATINGS					
	30 A	60 A	100 A	200 A	400 A	600 A
5,000	1,250	2,100	3,200	5,000	5,000	5,000
10,000	1,600	2,850	4,300	7,250	10,000	10,000
15,000	1,800	3,400	5,000	8,500	13,500	15,000
20,000	2,250	3,800	5,500	9,500	15,750	19,000
25,000	2,450	4,100	5,700	10,250	17,000	21,000
30,000	2,700	4,500	6,400	10,750	18,000	23,000
35,000	2,900	4,800	6,700	11,500	19,000	24,250
40,000	3,000	5,000	7,250	12,000	19,500	27,000
50,000	3,400	5,250	7,750	13,000	21,000	29,000
60,000	3,600	5,750	8,100	14,000	22,000	30,500
80,000	3,900	6,250	9,000	15,000	24,000	33,000
100,000	4,300	6,750	9,750	16,500	26,000	35,000
150,000	4,500	7,600	11,100	19,000	28,000	38,000
200,000	4,600	8,400	12,250	21,500	30,000	40,000

*Prospective RMS Symmetrical Amperes Short-Circuit Current
Note: Data Derived from Peak Let-Thru Curves

© 2023 Littelfuse, Inc.

CLASS K5 - NLN / NLS SERIES (ONE-TIME) FUSES

250/600 Vac • "One-Time" • 1–600 A



Description

NLN/NLS fuses provide low cost protection for general purpose feeder and branch circuits when available short circuit currents are less than 50 kA.

Applications

- General purpose residential and commercial circuits with little or no motor load.

Features/Benefits

- Economical
- 50 kA interrupting rating
- Indicating and DIN mount holders available

Specifications

Voltage Ratings	Ac: 250 V (NLN) 600 V (NLS) Dc: 250 V (NLN) 400 V (NLS 35 – 60 A) 500 V (NLS 8 – 30 A) (NLS 225 – 600 A) 600 V (NLS 1 – 7 A) (NLS 70 – 200 A)
Interrupting Ratings	Ac: 50 kA rms symmetrical (NLN/NLS) Dc: 20 kA (NLN/NLS 1 – 60 A) 50 kA (NLN/NLS 70 – 600 A)
Ampere Range	1 – 600 A (NLN/NLS)
Approvals	NLN/NLS: Standard 248-9, Class K5 UL Listed (File: E81895) CSA Certified (File: LR29862) CE Compliant (NLN series only)
Environmental	RoHS compliant (NLN series only)

Ordering Information

AMPERE RATINGS					
1	7	25	60	125	300
2	8	30	70	150	350
3	10	35	80	175	400
4	12	40	90	200	450
5	15	45	100	225	500
6	20	50	110	250	600

SERIES	AMPERAGE	CATALOG NUMBER	ORDERING NUMBER
NLS	20	NLS020	0NLS020.T
NLN	15	NLN015	0NLN015.T

Web Resources

Download TC Curves, CAD drawings and other technical information: **littelfuse.com/nln**
littelfuse.com/nls

Recommended Fuse Holders

LFH60 Series • LFH25 Series

Dimensions

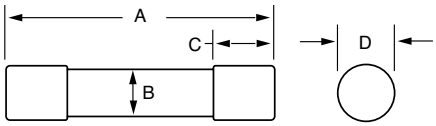

FIG. 1

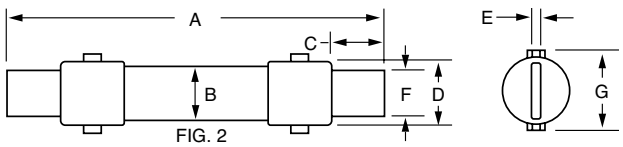

FIG. 2

AMPERES	REFER TO FIG. NO.	SERIES	DIMENSIONS INCHES (mm)						
			A	B	C	D	E	F	G
1 – 30	1	NLN	2 (50.8)	½ (12.7)	½ (12.7)	9/16 (14.3)	—	—	—
		NLS	5 (127.0)	¾ (19.1)	5/8 (15.9)	13/16 (20.6)	—	—	—
35 – 60	1	NLN	3 (76.2)	¾ (19.1)	5/8 (15.9)	13/16 (20.6)	—	—	—
		NLS	5½ (139.7)	1 (25.4)	5/8 (15.9)	1 1/16 (27.0)	—	—	—
70 – 100	2	NLN	5 7/8 (149.2)	1 (25.4)	1 (25.4)	1 1/16 (27.0)	1/8 (3.2)	¾ (19.1)	1 5/16 (33.3)
		NLS	7 7/8 (200.0)	1¼ (31.8)	1 (25.4)	1 5/16 (33.3)	1/8 (3.2)	¾ (19.1)	1 9/16 (39.7)
110 – 200	2	NLN	7 1/8 (181.0)	1½ (38.1)	1 3/8 (34.9)	1 9/16 (39.7)	3/16 (4.8)	1 1/8 (28.6)	1 7/8 (47.6)
		NLS	9 5/8 (244.5)	1¾ (44.5)	1 3/8 (34.9)	1 27/32 (46.8)	3/16 (4.8)	1 1/8 (28.6)	2 3/32 (53.2)
225 – 400	2	NLN	8 5/8 (219.1)	2 (50.8)	1 7/8 (47.6)	2 3/32 (53.2)	¼ (6.4)	1 5/8 (41.3)	2 13/32 (61.1)
		NLS	11 5/8 (295.3)	2½ (63.5)	1 7/8 (47.6)	2 19/32 (65.9)	¼ (6.4)	1 5/8 (41.3)	2 7/8 (73.0)
450 – 600	2	NLN	10 3/8 (263.5)	2½ (63.5)	2¼ (57.2)	2 19/32 (65.9)	¼ (6.4)	2 (50.8)	2 7/8 (73.0)
		NLS	13 3/8 (339.7)	3 (76.2)	2¼ (57.2)	3 3/32 (78.6)	¼ (6.4)	2 (50.8)	3 7/16 (87.3)

© 2023 Littelfuse, Inc.

CLASS J - JTD SERIES INDICATOR® POWR-PRO® FUSES

POWR-PRO® 600 Vac • Time Delay • 8/10–600 A



Description

The Littelfuse POWR-PRO® JTD_ID Indicator Class J fuse provides visual blown fuse indication and maximum protection in a compact package. The current-limiting time delay JTD_ID offers a patented design which reduces nuisance fuse openings.

Features/Benefits

- POWR-PRO® Performance
- Current-Limiting
- IEC Type 2 Protection
- Indication and non-indication version available
- Indicating and DIN mount holders available

Applications

- Fused combination motor controllers and motor control centers
- Transformer protection
- Protection for series rated molded case circuit-breaker panels
- General purpose circuits

Web Resources

Download TC Curves, CAD drawings and other technical information: **littelfuse.com/jtd**

Recommended Fuse Holders

LFJ60 Series 91
LFPSJ Series (8/10–60 A)..... 118

Dimensions

Please refer to the Class J dimensions 23

Specifications

Voltage Ratings	Ac: 600 V Dc: 300 V (8/10–100 A) 500 V (110–600 A)
Amperage Range	8/10–600 A
Interrupting Rating	Ac: 200 kA rms symmetrical 300kA rms symmetrical (Littelfuse self-certified) Dc: 20 kA
Material	Body: Melamine Caps: Nickel-plated Bronze (8/10–60 A) Brass (70–200 A) Brass Cap with Copper Blade (225–600 A)
Approvals	Ac: Standard 248-8, Class J UL Listed (File: E81895) CSA Certified (File: LR29862) Dc: Littelfuse self-certified
Country of Origin	Mexico

Ordering Information

AMPERAGE RATINGS							
8/10	2¼	4½	10	35	90	225	600
1	2½	5	12	40	100	250	–
1¼	2 8/10	5 6/10	15	45	110	300	–
1½	3	6	17½	50	125	350	–
1 6/10	3 2/10	7	20	60	150	400	–
1 8/10	3½	8	25	70	175	450	–
2	4	9	30	80	200	500	–

TYPE	SERIES	AMPERAGE	CATALOG NUMBER	ORDERING NUMBER
INDICATING	JTD_ID	60	JTD60ID	0JTD060.TXID
NON-INDICATING	JTD	60	JTD60	0JTD060.T

Peak Let-Thru Curve

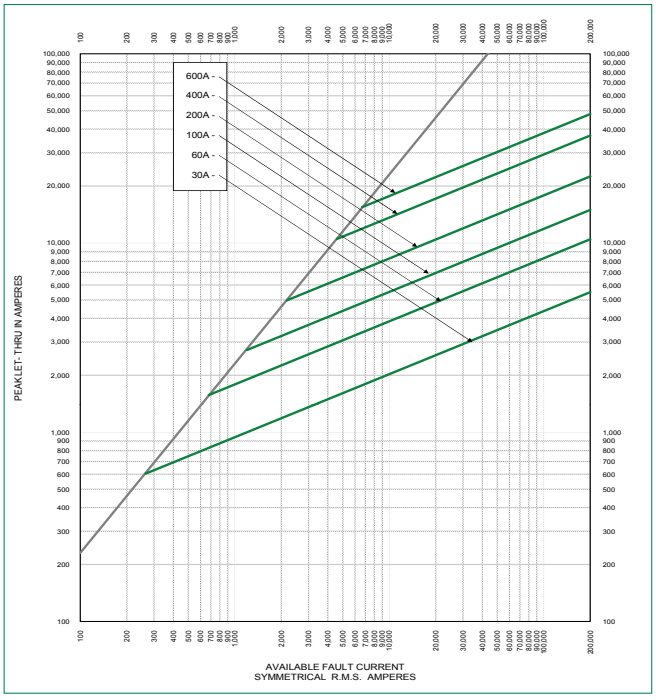

© 2023 Littelfuse, Inc.

CLASS J – JLS SERIES FUSES

600 VAC • Fast-Acting • 1-600 A



Description

The UL Listed Class J JLS Series fuses provide space saving, fast-acting overload and short-circuit protection for vital industrial and power conversion applications.

Littelfuse's JLS Series fuses offer best in class current limitation that prevents equipment damage from overcurrent faults.

Features and Benefits

- Superior performance in a space saving package
- Reliable interruption of all overcurrents with protection up to 200kA
- Extremely current limiting
- Fast-acting protection for surge-sensitive devices and components
- Reduces heating and magnetic effects due to overcurrents, extending equipment life
- Economical and readily available

Applications

- Power conversion device protection
- Variable speed drives
- Rectifiers
- Resistive loads
- Solid-state devices

Web Resources

Download TC curves, CAD drawings and other technical information: **littelfuse.com/jls**

Recommended Fuse Holders

LFJ60 Series 91
LFPSJ Series (8/10–60 A)..... 118

Specifications

Voltage Ratings	600 VAC
Interrupting Ratings	200 kA rms symmetrical
Ampere Range	1–600 A
Approvals	Standard 248-8, Class J UL Listed (File: E81895) CSA Certified (File: LR29862) Federal Specification WF-1814 (QPL-W-F-1814)

Ordering Information

AMPERE RATINGS					
1	20	45	90	175	350
3	25	50	100	200	400
6	30	60	110	225	450
10	35	70	125	250	500
15	40	80	150	300	600

TYPE	SERIES	AMPERAGE	CATALOG NUMBER	ORDERING NUMBER
NON-INDICATING	JLS	110	JLS110	0JLS110.X

Peak Let-Thru Curve

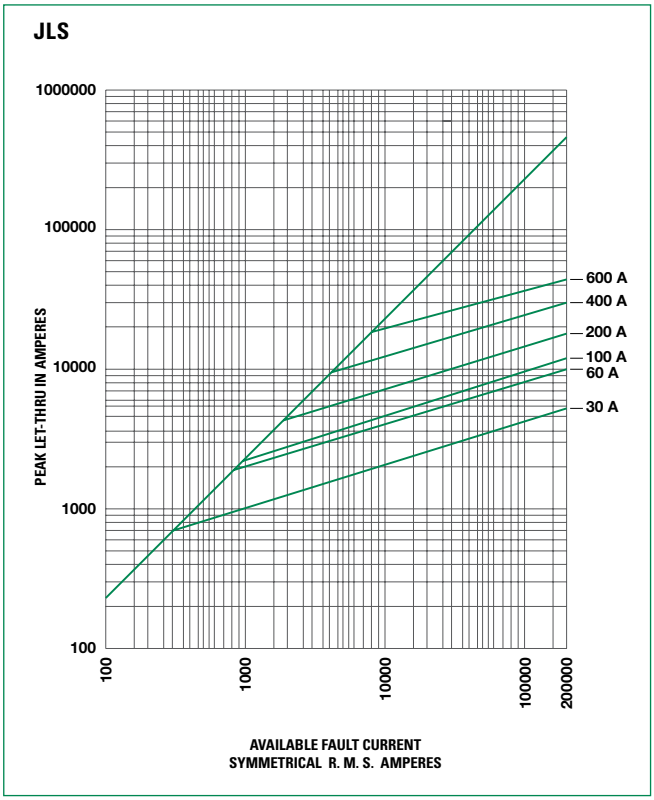

Dimensions

Please refer to the Class J dimensions 23

© 2023 Littelfuse, Inc.

CLASS J DIMENSIONS AND CURRENT-LIMITING EFFECTS

Dimensions Inches (mm)

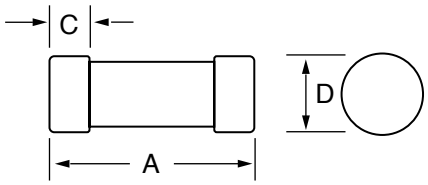

Fig. 1

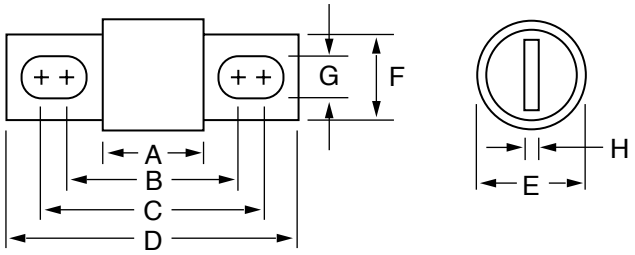

Fig. 2

Dimensions of JTD_ID, JTD and JLS

AMPERES	FIGURE NUMBER	DIMENSIONS INCHES (mm)							
		A	B	C	D	E	F	G	H
1 – 30	1	2¼ (57.2)	—	½ (12.7)	13/16 (20.6)	—	—	—	—
35 – 60	1	2⅜ (60.3)	—	⅝ (15.9)	1 1/16 (27.0)	—	—	—	—
70 – 100	2	2⅝ (66.7)	3 17/32 (89.7)	3 23/32 (94.5)	4⅝ (117.5)	1⅛ (28.6)*	¾ (19.1)	9/32 (7.1)	⅛ (3.2)
110 – 200	2	3 (76.2)	4 9/32 (108.7)	4 15/32 (113.5)	5¾ (146.1)	1½ (38.1)	1⅛ (28.6)	9/32 (7.1)	3/16 (4.8)
225 – 400	2	3⅜ (85.7)	5⅛ (130.2)	5⅜ (136.5)	7⅛ (181.0)	2 (50.8)	1⅝ (41.3)	13/32 (10.3)	¼ (6.4)
450 – 600	2	3¾ (95.3)	5 27/32 (148.4)	6 5/32 (156.4)	8 (203.2)	2½ (63.5)	2 (50.8)	17/32 (13.5)	⅜ (9.5)

*70-100 A JLS dimension = 1 (25.4)

Current-Limiting Effects of JTD_ID (600 V) Fuses

SHORT CIRCUIT CURRENT†	APPARENT RMS SYMMETRICAL CURRENT FOR VARIOUS FUSE RATINGS						
	15 A	30 A	60 A	100 A	200 A	400 A	600 A
5,000	565	750	1,500	1,800	2,800	4,800	5,000
10,000	675	925	1,900	2,450	3,600	5,700	7,750
15,000	775	1,050	2,100	2,800	4,100	6,500	9,000
20,000	825	1,125	2,300	3,000	4,400	7,250	9,700
25,000	900	1,200	2,500	3,300	5,000	8,000	10,500
30,000	950	1,300	2,600	3,500	5,100	8,400	11,000
35,000	1,000	1,350	2,700	3,700	5,400	9,000	12,000
40,000	1,050	1,400	2,800	3,900	5,600	9,200	12,500
50,000	1,100	1,500	3,000	4,200	6,000	10,000	13,000
60,000	1,200	1,600	3,200	4,500	6,400	10,500	14,000
80,000	1,300	1,700	3,400	4,900	7,200	11,200	15,500
100,000	1,375	1,800	3,600	5,200	7,800	12,200	16,500
150,000	1,500	2,000	3,950	6,000	9,000	14,500	19,000
200,000	1,600	2,175	4,000	6,500	10,000	16,000	20,500

†Prospective RMS Symmetrical Amperes Short-Circuit Current
Note: Data derived from Peak Let-Thru Curves

© 2023 Littelfuse, Inc.

CLASS T - JLLN / JLLS SERIES FUSES

300/600 V ac • Fast-Acting • 1–1200 A



Description

JLLN / JLLS series fuses are less than 1/3 the size of comparable Class R fuses and are typically used for short circuit protection of drives and surge sensitive components. When rated in accordance with the NEC*, JLLN / JLLS fuses provide fast-acting overload and short circuit protection for non-inductive circuits and equipment.

Features/Benefits

- Extremely current-limiting
- Compact design
- 200 kA interrupting rating
- JLLN 35–60 amperes available with PCB mounts

Applications

- Variable speed drive protection
- Power conversion devices (inverters, rectifiers, UPS)
- Power supplies and power distribution units
- Compact mains switches

Recommended Fuse Holders

LFT30 series
LFT60 series
LSCR series for 70–800 amperes

Web Resources

Download TC curves, CAD drawings and other technical information: **Littelfuse.com/jlln**
Littelfuse.com/jlls

*NEC is a trademark of it's respective owner.

Specifications

JLLN

Voltage Ratings	Ac: 300 V Dc: 160 V (1–60 A) 125 V (70–1200 A)
Ampere Range	1–1200 A
Interrupting Ratings	Ac: 200 kA rms symmetrical Dc: 50 kA (1–30 A) 20 kA (35–1200 A)
Approvals	Ac: UL Standard 248-15, Class T UL Listed (File: E81895): 1–1200 A CSA Certified (File: LR29862): 1–600 A Dc: UL Listed (File: E81895): 1–1200 A
Material	1-30 A: melamine body, bronze caps 35–1200 A: melamine body, copper caps
Environmental	RoHS compliant

JLLS

Voltage Ratings	Ac: 600 V Dc: 300 V
Ampere Range	1–1200 A
Interrupting Ratings	Ac: 200 kA rms symmetrical Dc: 20 kA
Approvals	Ac: UL Standard 248-15, Class T UL Listed (File: E81895): 1–1200 A CSA Certified (File: LR29862): 1– 600 A Dc: Littelfuse self-certified
Material	1–30 A: melamine body, copper caps 35–60 A: melamine body, bronze caps 70–1200 A: melamine body, copper caps
Environmental	RoHS compliant

Part Numbering System

JLLN xxxx V –

Series

Amperage

Package Quantity
T = 10 (1–60 A)
V = 5 (70–100 A)
X = 1 (110–1200 A)

Options
Blank = Standard Non-Plated
XP = Premium Plated
XL = Leaded†
XV = Vertical Mount†
XLS = Solder Lead†
XLSE = Solder Lead Extended

SERIES	AMP	PACK SIZE	PLATING SUFFIX	MOUNT SUFFIX	CATALOG NUMBER	ORDERING NUMBER
JLLS	6	T	–	–	JLLS006	JLLS006.T
JLLN	35	T	–	XL†	JLLN035L	JLLN035.TXL
JLLN	40	T	–	XLSE†	JLLN040LSE	JLLN040.TXLSE
JLLN	100	V	XP	–	JLLN100P	JLLN100.VXP

†Option is available for JLLN 35–60 amperes only. Premium plating is standard

Ordering Information

AMPERE RATINGS					
1	25	70	175	450	1100
2	30	80	200	500	1200
3	35	90	225	600	
6	40	100	250	700	
10	45	110	300	800	
15	50	125	350	900*	
20	60	150	400	1000	

*JLLS only

© 2023 Littelfuse, Inc.

CLASS T - JLLN / JLLS SERIES FUSES

Dimensions
Inches (mm)

AMPERES	REFER TO FIG. NO.	SERIES	DIMENSIONS INCHES (mm)						
			A	B	C	D	E	F	G
1–30	1	JLLN	.875 (22.2)	—	.281 (7.1)	.406 (10.3)	—	—	—
		JLLS	1.500 (38.1)	—	.281 (7.1)	.562 (14.3)	—	—	—
35–60	1	JLLN	.875 (22.2)	—	.281 (7.1)	.562 (14.3)	—	—	—
	2	JLLS	1.562 (39.7)	.812 (20.6)	.406 (10.3)	.994 (25.2)	.062 (1.6)	1.094 (27.8)	—
70–100	3	JLLN	2.156 (54.8)	1.562 (39.7)	.750 (19.1)	.812 (20.6)	.830 (21.1)	.281 (7.1)	.125 (3.2)
		JLLS	2.953 (75.0)	2.352 (59.7)	.750 (19.1)	.828 (21.0)	1.625 (41.3)	.281 (7.1)	.125 (3.2)
110–200	3	JLLN	2.437 (61.9)	1.687 (42.9)	.875 (22.2)	1.062 (27.0)	.830 (21.1)	.343 (8.7)	.187 (4.8)
		JLLS	3.250 (82.6)	2.507 (63.7)	.875 (22.2)	1.078 (27.4)	1.656 (42.1)	.343 (8.7)	.187 (4.8)
225–400	3	JLLN	2.750 (69.9)	1.843 (46.8)	1.000 (25.4)	1.312 (33.3)	.828 (21.0)	.406 (10.3)	.250 (6.4)
		JLLS	3.625 (92.1)	2.718 (69.1)	1.000 (25.4)	1.593 (40.5)	1.712 (43.5)	.406 (10.3)	.250 (6.4)
450–600	3	JLLN	3.062 (77.8)	2.031 (51.6)	1.250 (31.8)	1.593 (40.5)	.875 (22.2)	.484 (12.3)	.312 (7.9)
		JLLS	3.984 (101.2)	2.953 (75.0)	1.250 (31.8)	2.062 (52.4)	1.765 (44.8)	.484 (12.3)	.312 (7.9)
700–800	3	JLLN	3.375 (85.7)	2.218 (56.4)	1.750 (44.5)	2.062 (52.4)	.875 (22.2)	.546 (13.9)	.375 (9.5)
		JLLS	4.328 (109.9)	3.171 (80.6)	1.750 (44.5)	2.500 (63.5)	1.860 (47.2)	.546 (13.9)	.375 (9.5)
900–1200	3	JLLN	4.000 (101.6)	2.531 (64.3)	2.000 (50.8)	2.500 (63.5)	1.033 (26.2)	.609 (15.5)	.437 (11.1)
		JLLS	5.271 (133.9)	3.801 (96.5)	2.000 (50.8)	2.625 (66.7)	2.303 (58.5)	.609 (15.5)	.437 (11.1)

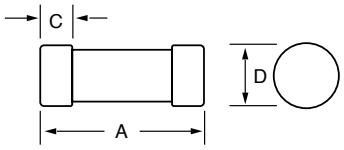

Fig. 1

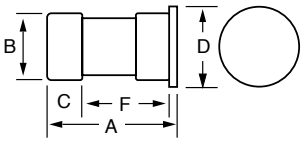

Fig. 2

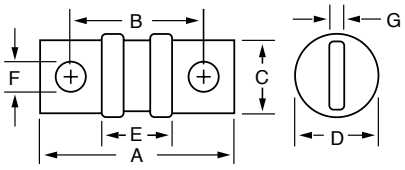

Fig. 3

CLASS G - SLC CLASS G FUSES

480/600 VAC • Time-Delay • 1/2-60 A



Specifications

Voltage Ratings	600 VAC (1/2 – 20 A) 480 VAC (25 – 60 A) 170 VDC (1/2 – 60 A)
Interrupting Ratings	AC: 100 kA rms symmetrical DC: 10 kA
Ampere Range	1/2 – 60 A
Approvals	Standard 248-5, Class G UL Listed (File: E81895) CSA Certified (File: LR29862) Federal Specification WF-1814 (QPL-W-F-1814)
Environmental	RoHS Compliant

Description

Littelfuse SLC fuses provide cost effective branch circuit protection. Fuse length varies to prevent over-fusing. Compact Class G fuses were the first fuse series to approach midget fuse dimensions and meet NEC® requirements for branch-circuit protection.

Features/Benefits

- Branch circuit rated
- Current-limiting
- 100 kA interrupting rating
- 600 VAC rated 1/2-20 A

Applications

- Branch circuit protection

Web Resources

Download TC Curves, CAD drawings and other technical information: **littelfuse.com/slc**

Recommended Fuse Holders

LFG60 Series (1-20 A)..... 105
LFG48 Series (25-60 A)..... 105

Ordering Information

Part Numbering System

0SLC xxxx H

Series

Amp Code
Refer to Amp Code Column in Electrical Specifications Table

Package Quantity
T = 10

SERIES	AMP	PACKAGE QUANTITY	CATALOG NUMBER	ORDERING NUMBER
SLC	2	10	SLC002	0SLC002.T

Dimensions

Ferrule Version

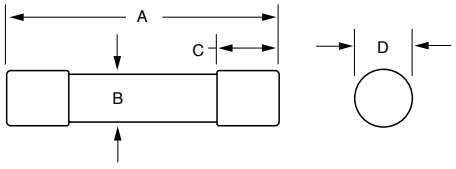

AMP	DIMENSIONS INCHES (mm)			
	A	B	C	D
1/2 – 15	1 5/16 (33.3)	3/8 (9.5)	9/32 (7.1)	13/32 (10.3)
20	1 13/32 (35.7)	3/8 (9.5)	9/32 (7.1)	13/32 (10.3)
25, 30	1 5/8 (41.3)	3/8 (9.5)	9/32 (7.1)	13/32 (10.3)
35 – 60	2 1/4 (57.2)	3/8 (9.5)	1/2 (12.7)	13/32 (10.3)

© 2023 Littelfuse, Inc.

CLASS CC - KLDR / KLKR SERIES FUSES

KLDR Series
600 Vac/300 Vdc • Time-Delay • 1/10-30 A



Description

KLDR fuses are time-delay fuses designed to protect control transformers, solenoids and similar inductive components with high magnetizing currents during the first half-cycle. They provide excellent protection of motor branch circuits containing IEC or NEMA rated motor controllers or contactors.

Specifications

Voltage Rating	Ac: 600 V Dc: 300 V
Ampere Range	1/10 – 30 A
Interrupting Rating	Ac: 200,000 A rms symmetrical Dc: 20,000 A
Approvals	Ac: Standard 248-4, Class CC UL Listed 1/10-30 A (File: E81895) CSA Certified 1/10-30 A (File: LR29862) Dc: Littelfuse self-certified
Material	Melamine body Bronze caps (nickel plated)
Environmental	RoHS Compliant
Country of Origin	Mexico

Ordering Information

AMPERE RATINGS				
1/10	6/10	1 8/10	4 1/2	10
1/8	3/4	2	5	12
15/100	8/10	2 1/4	5 6/10	15
3/16	1	2 1/2	6	17 1/2
2/10	1 1/8	2 8/10	6 1/4	20
1/4	1 1/4	3	7	25
3/10	1 4/10	3 2/10	7 1/2	30
4/10	1 1/2	3 1/2	8	—
1/2	1 6/10	4	9	—

SERIES	AMP	CATALOG NUMBER	ORDERING NUMBER
KLDR	10	KLDR010	KLDR010.TXP

Web Resources

For additional information, visit:
littelfuse.com/kldr

Recommended Fuse Holders

L60030C Series 141
LPSC Touch-Safe Series 156
LEC series inline fuse holder 189
571/572 series panel mount fuse holder 163

Dimensions

Please refer to the Class CC dimensions 48

KLKR Series
600 Vac/300 Vdc • Fast-Acting • 1/10-30 A



Description

KLKR Series Class CC fuses are fast-acting fuses intended for general purpose branch circuit protection. Their compact size, fast-acting overload response, and highly current-limiting design make them ideal for use in OEM equipment and control panels.

Specifications

Voltage Rating	AC: 600 Vac or less DC: 300 Vdc
Ampere Range	1/10 – 30 A
Interrupting Rating	AC: 200 kA rms symmetrical DC: 20 kA
Approvals	AC: Standard 248-4, Class CC UL Listed 1/10-30 A (File: E81895) CSA Certified 1/10-30 A (File: LR29862) DC: Littelfuse self-certified
Material	Melamine body Bronze caps (nickel plated)
Environmental	RoHS Compliant
Country of Origin	Mexico

Ordering Information

AMPERE RATINGS				
1/10	1/2	2 1/2	6	12
1/8	3/4	3	7	15
2/10	1	3 1/2	8	20
1/4	1 1/2	4	9	25
3/10	2	5	10	30

SERIES	AMP	CATALOG NUMBER	ORDERING NUMBER
KLKR	12	KLKR012	KLKR012.T

Web Resources

For additional information, visit:
littelfuse.com/klkr

Recommended Fuse Holders

L60030C Series 141
LPSC Touch-Safe Series 156

Dimensions

Please refer to the Class CC dimensions 48

© 2023 Littelfuse, Inc.

CLASS CC/CD - CCMR SERIES FUSES

POWR-PRO® 600 V ac • Dual Element • Time-Delay • 2/10–60 A



Description

The CCMR Series dual-element, time-delay fuses carry the Littelfuse POWR-PRO® advanced technology designation. These fuses are ideal for space-saving protection of motor circuits up to 40 hp* and are specifically designed to withstand sustained starting currents of small motors. Their superior time-delay capability eliminates needless downtime caused by power surges or equipment demands. They provide Type 2 "No Damage" protection for both NEMA- and IEC-type motor circuit components. Rating for rating, CCMR Series fuses are the most current-limiting fuses available.

POWR-PRO performance brand products offer advanced technology protection features such as high-interrupt capabilities up to 300 kA, low energy losses, and superior current limitation. 300 kA short-circuit testing for POWR-PRO products is self-certified and conducted at a nationally recognized testing laboratory.

Features & Benefits

FEATURES	BENEFITS
POWR-PRO® technology	Superior protection against electrical system damage
Dual-element, time-delay protection	Provides reliable time-delay characteristics to avoid unwanted fuse opening from surge currents in small horsepower motors
Extremely current-limiting	Reduces damage caused by heating and magnetic effects of short-circuit currents
Available up to 60 A	Smallest footprint 600 V UL listed branch circuit fuse
Type 2 "No Damage" protection	Easy to coordinate and offer protection for both NEMA- and IEC-type motor circuit components

Applications

- Motor and motor branch circuit protection
- Contactor protection
- Heating and general industrial protection

*Consult Motor Protection Tables on www.littelfuse.com or call 800-TEC-FUSE for specific motor sizing information.

© 2023 Littelfuse, Inc.

CLASS CC/CD - CCMR SERIES FUSES

Specifications

Voltage Rating
Ac: 600 V
Dc: 250 V (CCMR 35–60 A)
300 V (CCMR 2/10–10 A)
500 V (CCMR 12–30 A)

Ampere Range
2/10 – 60 A

Interrupting Ratings
Ac: 200 kA rms symmetrical
300 kA Littelfuse self-certified
Dc: 20 kA Littelfuse self-certified

Applicable Standards
UL 248-4; Class CC (CCMR 2/10–30 A)
UL 248-18; Class CD (CCMR 35–60 A)

Environmental
RoHS Compliant (CCMR 2/10–30 A)

Country of Origin
Mexico

Certification & Compliance

UL	UL Listed (File: E81895)
CSA	CSA Certified (File: LR29862)
CE	Declaration of Conformity: CCMR_P_210701_1 (2/10–30A)
RoHS	RoHS 2 Directive 2011/65/EU; Directive (EU) 2015/863 (2/10–30A)

Accessories

LFC600 series fuse blocks (35–60 A Only)
L60030C series fuse blocks (2/10–30 A Only)
LPSC & LFPSC series dead-front fuse holders (2/10–30 A Only)
571 & 572 series panel-mount fuse holders (2/10–30 A Only)

Ordering Information

AMPERE	CATALOG NUMBER	PRODUCT MARKING	PACK QUANTITY	ORDERING NUMBER	UPC	AGENCY APPROVALS		
						UL	CSA	ROHS
0.2	CCMR.200	CCMR 2/10A	10	CCMR.200TXP	07945896805	•	•	•
			100	CCMR.200HXP	07945896841	•	•	•
0.25	CCMR.250	CCMR 1/4A	10	CCMR.250TXP	07945896806	•	•	•
			100	CCMR.250HXP	07945896842	•	•	•
0.3	CCMR.300	CCMR 3/10A	10	CCMR.300TXP	07945896807	•	•	•
			100	CCMR.300HXP	07945896843	•	•	•
0.5	CCMR.500	CCMR 1/2A	10	CCMR.500TXP	07945896808	•	•	•
			100	CCMR.500HXP	07945896844	•	•	•
0.6	CCMR.600	CCMR 6/10A	10	CCMR.600TXP	07945896809	•	•	•
			100	CCMR.600HXP	07945896845	•	•	•
0.8	CCMR.800	CCMR 8/10A	10	CCMR.800TXP	07945896810	•	•	•
			100	CCMR.800HXP	07945896846	•	•	•
1	CCMR001	CCMR 1A	10	CCMR001.TXP	07945896811	•	•	•
			100	CCMR001.HXP	07945896847	•	•	•
1.25	CCMR1.25	CCMR 1 1/4A	10	CCMR1.25TXP	07945896812	•	•	•
			100	CCMR1.25HXP	07945896848	•	•	•
1.4	CCMR01.4	CCMR 1 4/10A	10	CCMR01.4TXP	07945896813	•	•	•
			100	CCMR01.4HXP	07945896849	•	•	•

© 2023 Littelfuse, Inc.

CLASS CC/CD - CCMR SERIES FUSES

Ordering Information

AMPERE	CATALOG NUMBER	PRODUCT MARKING	PACK QUANTITY	ORDERING NUMBER	UPC	AGENCY APPROVALS		
						UL	CSA	ROHS
1.5	CCMR01.5	CCMR 1½A	10	CCMR01.5TXP	07945896814	•	•	•
			100	CCMR01.5HXP	07945896850	•	•	•
1.6	CCMR01.6	CCMR 1⅘A	10	CCMR01.6TXP	07945896815	•	•	•
			100	CCMR01.6HXP	07945896851	•	•	•
1.8	CCMR01.8	CCMR 1⅘A	10	CCMR01.8TXP	07945896816	•	•	•
			100	CCMR01.8HXP	07945896852	•	•	•
2	CCMR002	CCMR 2A	10	CCMR002.TXP	07945896817	•	•	•
			100	CCMR002.HXP	07945896853	•	•	•
2.25	CCMR2.25	CCMR 2¼A	10	CCMR2.25TXP	07945896818	•	•	•
			100	CCMR2.25HXP	07945896854	•	•	•
2.5	CCMR02.5	CCMR 2½A	10	CCMR02.5TXP	07945896819	•	•	•
			100	CCMR02.5HXP	07945896855	•	•	•
2.8	CCMR02.8	CCMR 2⅘A	10	CCMR02.8TXP	07945896820	•	•	•
			100	CCMR02.8HXP	07945896856	•	•	•
3	CCMR003	CCMR 3A	10	CCMR003.TXP	07945896821	•	•	•
			100	CCMR003.HXP	07945896857	•	•	•
3.2	CCMR03.2	CCMR 3²/₁₀A	10	CCMR03.2TXP	07945896822	•	•	•
			100	CCMR03.2HXP	07945896858	•	•	•
3.5	CCMR03.5	CCMR 3½A	10	CCMR03.5TXP	07945896823	•	•	•
			100	CCMR03.5HXP	07945896859	•	•	•
4	CCMR004	CCMR 4A	10	CCMR004.TXP	07945896824	•	•	•
			100	CCMR004.HXP	07945896860	•	•	•
4.5	CCMR04.5	CCMR 4½A	10	CCMR04.5TXP	07945896825	•	•	•
			100	CCMR04.5HXP	07945896861	•	•	•
5	CCMR005	CCMR 5A	10	CCMR005.TXP	07945896826	•	•	•
			100	CCMR005.HXP	07945896862	•	•	•
5.6	CCMR05.6	CCMR 5⅘A	10	CCMR05.6TXP	07945896827	•	•	•
			100	CCMR05.6HXP	07945896863	•	•	•
6	CCMR006	CCMR 6A	10	CCMR006.TXP	07945896828	•	•	•
			100	CCMR006.HXP	07945896864	•	•	•
6.25	CCMR6.25	CCMR 6¼A	10	CCMR6.25TXP	07945896829	•	•	•
			100	CCMR6.25HXP	07945896865	•	•	•
7	CCMR007	CCMR 7A	10	CCMR007.TXP	07945896830	•	•	•
			100	CCMR007.HXP	07945896866	•	•	•
7.5	CCMR07.5	CCMR 7½A	10	CCMR07.5TXP	07945896831	•	•	•
			100	CCMR07.5HXP	07945896867	•	•	•
8	CCMR008	CCMR 8A	10	CCMR008.TXP	07945896832	•	•	•
			100	CCMR008.HXP	07945896868	•	•	•
9	CCMR009	CCMR 9A	10	CCMR009.TXP	07945896833	•	•	•
			100	CCMR009.HXP	07945896869	•	•	•
10	CCMR010	CCMR 10A	10	CCMR010.TXP	07945896834	•	•	•
			100	CCMR010.HXP	07945896870	•	•	•
12	CCMR012	CCMR 12A	10	CCMR012.TXP	07945896835	•	•	•
			100	CCMR012.HXP	07945896871	•	•	•
15	CCMR015	CCMR 15A	10	CCMR015.TXP	07945896836	•	•	•
			100	CCMR015.HXP	07945896872	•	•	•
17.5	CCMR17.5	CCMR 17½A	10	CCMR17.5TXP	07945896837	•	•	•
			100	CCMR17.5HXP	07945896873	•	•	•

© 2023 Littelfuse, Inc.

CLASS CC/CD - CCMR SERIES FUSES

Ordering Information

AMPERE	CATALOG NUMBER	PRODUCT MARKING	PACK QUANTITY	ORDERING NUMBER	UPC	AGENCY APPROVALS		
						UL	CSA	ROHS
20	CCMR020	CCMR 20A	10	CCMR020.TXP	07945896838	•	•	•
			100	CCMR020.HXP	07945896874	•	•	•
25	CCMR025	CCMR 25A	10	CCMR025.TXP	07945896839	•	•	•
			100	CCMR025.HXP	07945896875	•	•	•
30	CCMR030	CCMR 30A	10	CCMR030.TXP	07945896840	•	•	•
			100	CCMR030.HXP	07945896876	•	•	•
35	CCMR035	CCMR 35	10	CCMR035.T	07945801706	•	•	
40	CCMR040	CCMR 40	10	CCMR040.T	07945801707	•	•	
45	CCMR045	CCMR 45	10	CCMR045.T	07945801708	•	•	
50	CCMR050	CCMR 50	10	CCMR050.T	07945801709	•	•	
60	CCMR060	CCMR 60	10	CCMR060.T	07945801710	•	•	

Electrical Specifications

AMPERAGE RATING	VOLTAGE RATING		INTERRUPTING RATING		WATTS LOSS AT 100 % RATED CURRENT (W)	WATTS LOSS AT 80 % RATED CURRENT (W)	TOTAL CLEARING I^2T (A^2 SEC) 200 KA
	AC	DC	AC	DC			
2¼	600	300	200 kA	20 kA	1.55	0.99	351
2½	600	300	200 kA	20 kA	1.99	1.26	192
3	600	300	200 kA	20 kA	1.55	1.02	286
4	600	300	200 kA	20 kA	1.62	1.04	1870
5	600	300	200 kA	20 kA	1.89	1.20	1060
6¼	600	300	200 kA	20 kA	1.72	1.08	797
7½	600	300	200 kA	20 kA	1.72	1.09	983
8	600	300	200 kA	20 kA	1.39	0.83	431
10	600	300	200 kA	20 kA	1.49	0.90	1250
15	600	500	200 kA	20 kA	1.77	1.03	1120
20	600	500	200 kA	20 kA	2.3	1.39	918
30	600	500	200 kA	20 kA	2.75	1.62	1790

Dimensions Inches (mm)

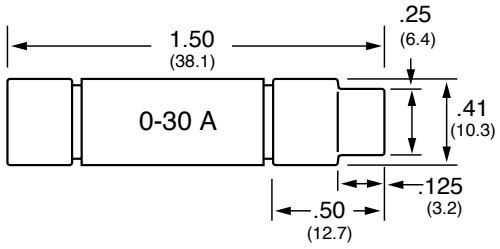

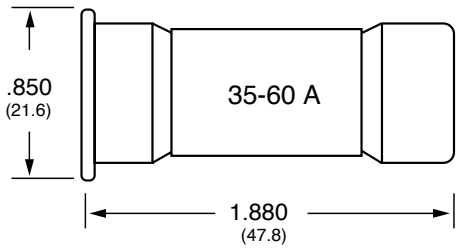

CLASS CC / CD DIMENSIONS AND CURRENT-LIMITING EFFECTS

Dimensions Inches (mm)

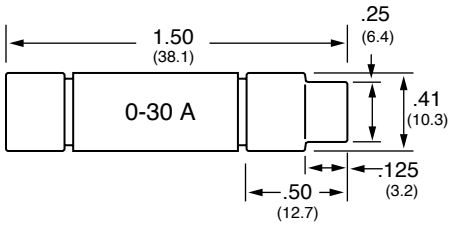

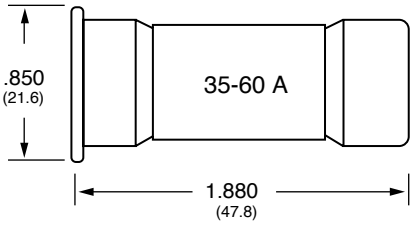

Current-Limiting Effects of CCMR (600 V) fuses

SHORT CIRCUIT CURRENT*	APPARENT RMS SYMMETRICAL CURRENT FOR VARIOUS FUSE RATINGS																	
	2.25A	2.5A	3A	4A	5A	6.25A	7.5A	8A	10A	12A	15A	20A	30A	35A	40A	45A	50A	60A
5,000	203	224	287	289	460	472	442	437	359	369	435	355	621	1,170	1,240	1,320	1,070	1,525
10,000	256	282	361	364	580	595	557	551	452	465	548	447	783	1,480	1,565	1,670	1,355	1,930
15,000	293	323	413	416	664	681	637	631	517	532	627	512	896	1,695	1,795	1,915	1,555	2,200
20,000	323	356	455	458	730	750	702	694	569	585	690	563	987	1,870	1,980	2,110	1,710	2,430
25,000	348	383	490	493	787	808	756	748	613	630	743	607	1,063	2,015	2,135	2,275	1,845	2,620
30,000	370	407	521	524	836	858	803	795	651	670	790	645	1,129	2,145	2,270	2,420	1,965	2,780
35,000	389	429	548	552	880	903	845	837	686	705	832	679	1,189	2,260	2,390	2,550	2,070	2,885
40,000	407	448	573	577	920	944	884	875	717	737	870	709	1,243	2,360	2,500	2,665	2,165	3,025
50,000	438	483	617	622	991	1,017	952	942	772	794	937	764	1,339	2,545	2,695	2,875	2,330	3,200
60,000	466	513	656	661	1,053	1,081	1,012	1,001	821	844	995	812	1,423	2,705	2,865	3,055	2,480	3,350
80,000	513	564	722	727	1,159	1,190	1,114	1,102	903	929	1,096	894	1,566	2,985	3,160	3,365	2,730	3,540
100,000	552	608	778	783	1,249	1,282	1,200	1,187	973	1,001	1,180	963	1,687	3,215	3,405	3,630	2,945	3,685
150,000	632	696	890	897	1,430	1,467	1,373	1,359	1,114	1,146	1,351	1,102	1,931	3,685	3,905	4,160	3,375	4,030
200,000	696	766	980	987	1,574	1,615	1,511	1,496	1,226	1,261	1,487	1,213	2,125	4,060	4,300	4,580	3,720	4,230

*Prospective RMS Symmetrical Amperes Short-Circuit Current
Note: Data Derived from Peak Let-Thru Curves

Peak Let-Thru Curve KLDR

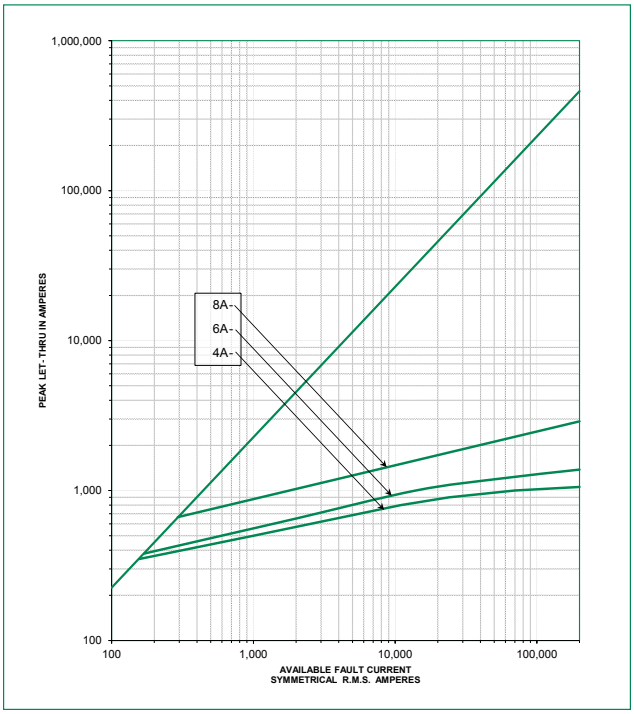

Peak Let-Thru Curve KLKR

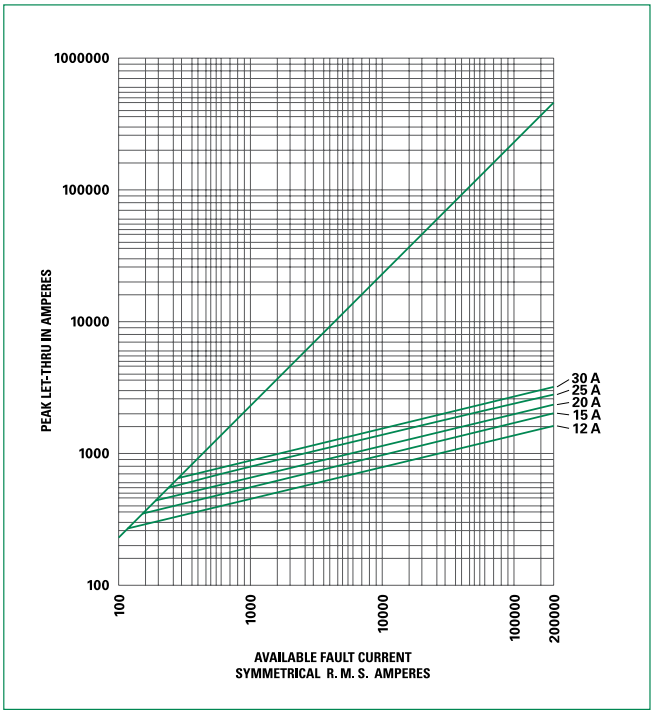

© 2023 Littelfuse, Inc.

THIS PAGE INTENTIONALLY LEFT BLANK

10 x 38 mm MIDGET FUSES

KLK Series
Fast-Acting Fuse
600 V ac



AMPERE RATINGS			
1/10	1	5	15
1/8	1 1/2	6	20
2/10	2	7	25
1/4	2 1/2	8	30
3/10	3	9	—
1/2	3 1/2	10	—
3/4	4	12	—

Specifications

Fast-acting, high-interrupting capacity fuse designed for control circuits, HID lighting, street-lighting, meter circuits.

Voltage Ratings 600 V ac
500 V dc

Interrupting Ratings 100 kA @ 600 V ac
50 kA @ 500 V dc
(capable of 200 kA)

Approvals UL Listed (E10480)
CSA Certified (LR29862)

Dimensions **L** 38.1 mm (1 1/2")
D 10.31 mm (13/32")

littelfuse.com/klk

KLKD Series
Fast-Acting Fuse
600 V ac/dc



AMPERE RATINGS			
1/10	1	5	15
1/8	1 1/2	6	20
2/10	2	7	25
1/4	2 1/2	8	30
3/10	3	9	—
1/2	3 1/2	10	—
3/4	4	12	—

Specifications

Fast-acting, high DC rated fuse used in solar combiner boxes, DC control circuits, UPS protection. Available in PC board mount.

Voltage Ratings 600 V ac/V dc

Interrupting Ratings Ac: 100 kA
200 kA Littelfuse self-certified
Dc: 1/10–30: 10 kA (UL 248-19)
1/10–30: 50 kA (UL 248-14)

Approvals* UL Listed (E339112 & E10480)
VDE Certified (No. 40033094)
CSA Certified (LR29862)

Dimensions **L** 38.1 mm (1 1/2")
D 10.31 mm (13/32")

*Refer to Ordering Information Table on datasheet

littelfuse.com/klkd

FLM Series
Time-Delay Fuse
250 V ac



AMPERE RATINGS				
1/10	8/10	2	4 1/2	10
15/100	1	2 1/4	5	12
2/10	1 1/8	2 1/2	5 6/10	15
1/4	1 1/4	2 8/10	6	20
3/10	1 4/10	3	6 1/4	25
4/10	1 1/2	3 2/10	7	30
1/2	1 6/10	3 1/2	8	—
6/10	1 8/10	4	9	—

Specifications

250V time-delay fuses used to protect circuits with high in-rush. Especially suited for supplemental protection of small motors.

Voltage Ratings 250 V ac
125 V dc self-certified @ 10 kA

Interrupting Ratings Ac: 10,000 A
Dc: 10,000 A Self Certified

Approvals UL Listed (File: E10480)
CSA Certified (029862_0_000)

Dimensions **L** 38.1 mm (1 1/2")
D 10.31 mm (13/32")

littelfuse.com/flm

FLQ Series
Time-Delay Fuse
500 V ac



AMPERE RATINGS				
1/10	1/2	2	5	12
1/8	6/10	2 1/4	5 6/10	14
15/100	8/10	2 1/2	6	15
3/16	1	3	6 1/4	20
2/10	1 1/8	3 2/10	7	25
1/4	1 1/4	3 1/2	8	30
3/10	1 1/2	4	9	—
4/10	1 6/10	4 1/2	10	—

Specifications

500V time-delay fuses for supplemental protection of control power transformers, solenoids, and circuits with high in-rush. Ideal for 480 V systems.

Voltage Ratings 500 V ac
300 V dc self-certified @ 10 kA

Interrupting Ratings 10 kA @ 500 V ac

Approvals UL Listed (E10480)
CSA Certified (LR29862)

Dimensions **L** 38.1 mm (1 1/2")
D 10.31 mm (13/32")

littelfuse.com/flq

BLN Series
Fast-Acting Fuse
250 V ac



AMPERE RATINGS				
1	3	6	12	25
1 1/2	4	8	15	30
2	5	10	20	—

Specifications

250 volt BLN fuses provide low-cost protection for military applications and control circuits.

Voltage Ratings 250 V ac

Interrupting Ratings 10,000 A

Approvals UL Listed (E10480)
CSA Certified (LR29862)

Dimensions **L** 38.1 mm (1 1/2")
D 10.31 mm (13/32")

littelfuse.com/bln

BLF Series
Fast-Acting Fuse
125/250 V ac



AMPERE RATINGS			
1/2	3	7	15
1	4	8	20
1 1/2	5	9	25
2	6	10	30
2 1/2	6 1/4	12	—

Specifications

BLF fuses are the lowest price midget fuse. They are suitable for control circuit and instrument protection in dry locations.

Voltage Ratings 250 V ac 1/2 - 15 A
125 V ac 20 - 30 A

Interrupting Ratings 10 kA @ rated V ac

Approvals UL Listed (E10480)
CSA Certified (LR29862)

Dimensions **L** 38.1 mm (1 1/2")
D 10.31 mm (13/32")

littelfuse.com/blf

© 2023 Littelfuse, Inc.

10 x 38 mm MIDGET FUSES

BLS Series
Fast-Acting Fuse
600 V ac / 250 V ac



AMPERE RATINGS			
2/10	1	3	8
4/10	1 1/2	4	10
1/2	1 6/10	5	—
3/4	1 8/10	6	—
8/10	2	7	—

Specifications

Slightly shorter than a traditional 10 x 38, BLS fuses provide space saving protection for low amperage applications.

Voltage Ratings 600 V ac 2/10 - 5 A
250 V ac 6 - 10 A
Interrupting Ratings 10 kA @ rated V ac
Approvals UL Listed (E10480)
CSA Certified (LR29862)
Dimensions **L** 34.9 mm (1 3/8")
D 10.31 mm (13/32")

littelfuse.com/bls

KLQ Series
Increased Time-Delay
600 V ac



AMPERE RATINGS		
1	2	5
1 6/10	3	6

Specifications

Same physical size as the BLS fuse with more time delay. Designed to protect gaseous vapor fixtures, HID ballasts and other electronic lighting circuits.

Voltage Ratings 600 V ac
Interrupting Ratings 10 kA @ rated V ac
Approvals UL Listed (E10480)
CSA Certified (LR29862)
Dimensions **L** 34.9 mm (1 3/8")
D 10.31 mm (13/32")

littelfuse.com/klq

FLA Series
Time-Delay Pin Indicating Fuse
125 V ac



AMPERE RATINGS				
1/10	8/10	2	4 1/2	12*
15/100	1	2 1/4	5	15*
2/10	1 1/8	2 1/2	5 6/10	20*
1/4	1 1/4	2 8/10	6	25*
3/10	1 4/10	3	6 1/4	30*
4/10	1 1/2	3 2/10	7	—
1/2	1 6/10	3 1/2	8	—
6/10	1 8/10	4	10	—

*12-30 A are dual tube design

Specifications

Pin indicating time-delay fuses. Use in conjunction with special fuse blocks to operate mechanical signal switches or energize alarm circuits.

Voltage Ratings 125 V ac
Interrupting Ratings 10 kA @ rated V ac
Approvals UL Listed (E10480)
Dimensions **L** 38.1 mm (1 1/2")
D 10.31 mm (13/32")

littelfuse.com/fla

FLU Series
Multimeter Protection
1000 V ac/dc



Specifications

Multimeter protection fuses.

Voltage Rating 1000 V ac/dc
Interrupting Rating 44/100 A: 10 kA
11 A: 20 kA
Ampere Ratings 44/100 & 11 A
Time Constant 10 ms
Approvals UL Recognized (E10480)
CSA Certified (LR29862)
Dimensions 44/100 A: 13/32" x 1 3/8"
11 A: 13/32" x 1 1/2"

littelfuse.com/flu

10 x 38mm Midget Fuse Holder Configurations

OPEN FUSE BLOCK	PC BOARD MOUNT FUSE BLOCK
	
L60030M pg. 107	L60030MPCB pg. 109

POWR-SAFE DEAD FRONT HOLDERS

	
LPSC/LPSM (600 V) pg. 117	LPHV (1000 V) pg. 116

Section Overview

Diverse application needs require a broad range of fuses. Littelfuse offers a full line of fuses for various applications. As the market leader in automotive and electronics fuses, we are able to deliver innovative circuit protection solutions to our customers. Visit **Littelfuse.com** for our full line of automotive and electronics solutions.







ELECTRONIC FUSES AND BLADE FUSES

Table of Contents

Glass / Electronic Fuses 53

Blade / Automotive Fuses 56

© 2023 Littelfuse, Inc.

HIGH DC VOLTAGE AND PC BOARD MOUNT FUSES

505 Series
Lead-Free 3AB, Fast-Acting



AMPERE RATINGS		
10	16	25
12	20	30

Specifications

A 500 Vac/Vdc rated ceramic fuse with remarkable interrupting rating in a compact 6.3 x 32 mm package, well suited for circuit protection in high energy applications.

Voltage Rating 450 Vac (10 – 12 A)
250 Vdc (10 – 12 A)
500 Vac/dc (16 – 30 A)
Sample Part 0505010.MXP*
Axial Lead 505_XEP Series
Dimensions **L** 31.75 mm (1.25")
D 6.35 mm (.25")

littelfuse.com/505

*Bulk configurations only

477 Series
5 x 20 mm Slo-Blo® Fuse



AMPERE RATINGS			
.5	2	5	10
.8	3.15	6.3	12
1	4	8	16

Specifications

500 Vac/400 Vdc rated, 5 x 20 mm, time-lag, surge withstand ceramic body fuse.

Voltage Rating 500 Vac
400 Vdc
Sample Part 0477002.MXP*
Axial Lead 477_XEP Series
Dimensions **L** 20 mm (.79")
D 5.2 mm (.20")

littelfuse.com/477

*Bulk configurations only

Dimensions mm (inches)

3AG/3AB

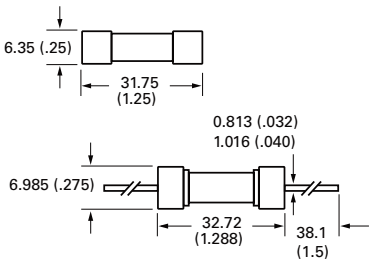

2AG

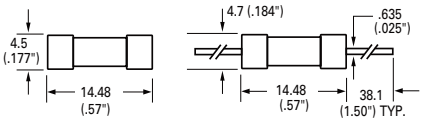

5 x 20 mm

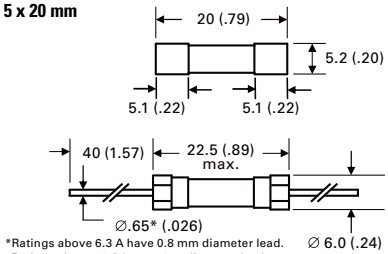

*Ratings above 6.3 A have 0.8 mm diameter lead.
Ratings above 12 A have 1.2 m diameter lead.

273 Series
Very Fast-Acting Microfuse



AMPERE RATINGS					
.002	.031	.125	.400	.750	2
.005	.050	.200	.500	.800	3
.010	.062	.250	.600	1	4
.015	.100	.300	.700	1.5	5

Specifications

Similar to 272 and 278 series, except has transparent cap for visual indication of fuse status. *See web for approvals by part.

Voltage Rating 125 Vac/dc
Sample Part 0273002.V

littelfuse.com/273

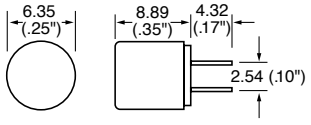

251 Series
Fast-Acting Pico® II Fuse



AMPERE RATINGS				
.062	.500	1.25	3	7
.125	.630	1.5	3.5	10
.250	.750	2	4	12
.375	1	2.5	5	15

Specifications

Subminiature fuse for soldered mounting on printed circuit boards. Available on tape and reel for automatic insertion. *See web for approvals by part.

Voltage Ratings 125 Vac/dc 1/16 – 10 A
32 Vac/dc 12 – 15 A
Sample Part 0251001.NAT1L

littelfuse.com/251

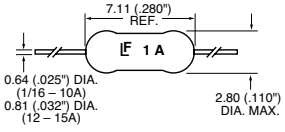

451 Series
NANO²® Very Fast-Acting



Add "L" suffix when ordering RoHS compliant 451 series

AMPERE RATINGS					
0.062	0.25	0.630	1.5	3.15	7
0.1	0.315	0.750	1.6	3.5	8
0.125	0.375	0.800	2	4	10
0.160	0.400	1	2.5	5	12
0.2	0.5	1.25	3	6.3	15

Specifications

The Nano² SMF Fuse is a very small, Wire-in-Air (WIA) square shape surface mount fuse which is very suitable for the secondary side circuit over-current protection applications and is designed for PCB using surface mount technology
*See web for approvals by part.

Voltage Rating 65 – 125 V
Sample Part 0451.125MP

littelfuse.com/451

LEADED AND CARTRIDGE FUSES

312/318 Series
3AG Fast-Acting



AMPERE RATINGS					
.062	.200	.750	1.8	5	15
.100	.250	1	2	6	20
.125	.300	1.25	2.25	7	25
.15	.375	1.5	2.5	8	30
.175	.500	1.6	3	10	35
.187	.600	1.75	4	12	—

Specifications

Designed for fast-acting protection of electronic equipment and appliances. The "standard" fast-acting, glass tube fuse.

Voltage Ratings 250 Vac 1/100 – 10 A
32 Vac 12 – 35 A
Dimensions **L** 31.75 mm (1.25")
D 6.35 mm (.25")
Sample Part 0312005.VXP
For fuses with axial leads, request 318 Series.

littelfuse.com/312

313/315 Series
3AG Slo-Blo®



AMPERE RATINGS						
.010	.175	.500	1.25	2.8	7	30
.031	.187	.600	1.5	3	8	—
.040	.200	.700	1.6	3.2	10	—
.062	.250	.750	1.8	4	12	—
.100	.300	.800	2	5	15	—
.125	.375	1	2.25	6.25	20	—
.150	.400	1.2	2.5	6.3	25	—

Specifications

313 and 315 series fuses have time-delay in the overload range, providing superior protection for inductive loads. ID feature available which discolors upon opening.

Voltage Ratings 250 Vac 1/100 – 8 A
32 Vac 10 – 30 A
Dimensions **L** 31.75 mm (1.25")
D 6.35 mm (.25")
Sample Part 0313005.VXP
For fuses with axial leads, request 315 Series.
For Fuses with ID, add "ID" suffix.

littelfuse.com/313

314/324 Series
3AB Fast-Acting



AMPERE RATINGS				
.375	2	6	12	30
.500	3	7	15	40
.750	4	8	20	—
1	5	10	25	—

Specifications

Similar to 312 series, but ceramic tube permits higher interrupting ratings and voltage ratings: 250 volt ratings to 40 amps.

Voltage Rating 250 Vac 3/8 – 40 A
125 Vdc 3/8 – 30 A
150 Vdc 40 A
Dimensions **L** 31.75 mm (1.25")
D 6.35 mm (.25")
Sample Part 03145005.VXP
For fuses with axial leads, request 324 Series.

littelfuse.com/314

326/325 Series
3AB Slo-Blo®



AMPERE RATINGS					
.010	.187	.600	1.5	4	15
.031	.200	.700	1.6	5	20
.062	.250	.750	2	6.25	25
.100	.300	.800	2.5	7	30
.125	.375	1	2.8	8	—
.150	.400	1.2	3	10	—
.175	.500	1.25	3.2	12	—

Specifications

The 326 series fuse has time-delay similar to the 313 series, but the ceramic body permits higher voltage ratings for the 8 – 30 ampere sizes and faster opening of short-circuits.

Voltage Ratings 250 Vac 1/100 – 30 A
125 Vdc 1/4 – 3 A
125 Vdc 12 – 30 A
Dimensions **L** 31.75 mm (1.25")
D 6.35 mm (.25")
Sample Part 0326.100VXP
For fuses with axial leads, request 325 Series.

littelfuse.com/326

229/230 Series
2AG Slo-Blo®



AMPERE RATINGS			
.250	.750	2	4
.350	.800	2.25	5
.375	1	2.5	6
.500	1.25	3	7
.600	1.5	3.5	—

Specifications

2AG indicating fuses instantly identify themselves upon opening by showing a discoloration of their glass bodies, eliminating guesswork. This unique design offers the same quality performance characteristics as the standard 2AG fuse design.*

Voltage Ratings 250 Vac 1/4 – 3 1/2 A
125 Vac 4 – 7 A
125 Vdc 1/4 – 7 A
Dimensions **L** 14.48 mm (.57")
D 4.5 mm (.177")
Sample Part 02291.25VXP
For fuses with axial leads, request 230 Series.
**Must add "S" suffix when ordering indicating fuse*

littelfuse.com/229

225/224 Series
2AG Fast-Acting



AMPERE RATINGS				
.375	1	2.5	4	7
.500	1.5	3	5	8
.750	2	3.5	6	10

Specifications

Fast-acting performance of the 312 series 3AG fuses in less than one-third the space. For protection of electronic equipment and appliances.

Voltage Ratings 250 Vac 3/8 – 3 1/2 A
125 Vac 4 – 10 A
125 Vdc 3/8 – 3 1/2 A
Dimensions **L** 14.48 mm (.57")
D 4.5 mm (.177")
Sample Part 0225003.VXP
For fuses with axial leads, request 224 Series.

littelfuse.com/225

Note: All fuses on this page are available in packaged and bulk configurations

© 2023 Littelfuse, Inc.

5 x 20 mm IEC LEADED AND CARTRIDGE FUSES

215 Series
5 x 20 mm IEC Slo-Blo®



AMPERE RATINGS					
.125	.315	.800	2	5	12
.160	.400	1	2.5	6.3	15
.200	.500	1.25	3.15	8	16
.250	.630	1.6	4	10	20

Specifications

Time-delay protection of electronic equipment and appliances when fuses to International Standards are required. Replacement fuse for foreign equipment.

Voltage Rating 250 Vac
Dimensions **L** 20 mm (.79")
D 5.2 mm (.20")
Sample Part 0215005.VXP
For fuses with axial leads, request 215_XEP series.

littelfuse.com/215

216 Series
5 x 20 mm IEC Fast-Acting



AMPERE RATINGS						
.050	.125	.315	1	2.5	6.3	16
.063	.160	.500	1.25	3.15	8	—
.080	.200	.630	1.6	4	10	—
.100	.250	.800	2	5	12.5	—

Specifications

Fast-acting protection of electronic equipment and appliances when fuses to International Standards are required. Replacement fuse for foreign equipment.

Voltage Rating 250 Vac
60 Vdc (1.25-3.15, 4-6.3 A only)
Dimensions **L** 20 mm (.79")
D 5.2 mm (.20")
Sample Part 0216005.VXP
For fuses with axial leads, request 216_XEP series.

littelfuse.com/216

217 Series
5 x 20 mm IEC Fast-Acting



AMPERE RATINGS						
.032	.100	.250	.630	1.6	4	10
.050	.125	.315	.800	2	5	15
.063	.160	.400	1	2.5	6.3	—
.080	.200	.500	1.25	3.15	8	—

Specifications

Fast-acting protection of electronic equipment and appliances when fuses to International Standards are required. Replacement fuse for foreign equipment.

Voltage Rating 250 Vac
75Vdc (2-3.15 A only)
60 Vdc (6.3, 2.-5 A only)
Dimensions **L** 20 mm (.79")
D 5.2 mm (.20")
Sample Part 0217005.VXP
For fuses with axial leads, request 217_XEP series.

littelfuse.com/217

218 Series
5 x 20 mm IEC Slo-Blo®



AMPERE RATINGS					
.032	.100	.315	1	3.15	10
.040	.125	.400	1.25	4	12.5
.050	.160	.500	1.6	5	15
.063	.200	.630	2	6.3	16
.080	.250	.800	2.5	8	—

Specifications

Time-delay protection of electronic equipment and appliances when fuses to International Standards are required. Replacement fuse for foreign equipment.

Voltage Rating 250 Vac
Dimensions **L** 20 mm (.79")
D 5.2 mm (.20")
Sample Part 0218005.VXP
For fuses with axial leads, request 218_XEP series.

littelfuse.com/218

235 Series
5 x 20 mm UL/CSA Fast-Acting



AMPERE RATINGS					
.100	.300	.700	1.60	3.5	7
.125	.400	.800	2	4	—
.200	.500	1	2.5	5	—
.250	.600	1.25	3	6	—

Specifications

5 x 20 mm fuses designed to UL and CSA standards. Fast-acting protection of electronic equipment and appliances.

Voltage Ratings 250 Vac $^{1}/_{10}$ – 3 $^{1}/_{2}$ A
125 Vac 4 – 7 A
Dimensions **L** 20 mm (.79")
D 5.2 mm (.20")
Sample Part 0235005.VXP
For fuses with axial leads, request 235_XEP series.

littelfuse.com/235

239 Series
5 x 20 mm UL/CSA Slo-Blo®



AMPERE RATINGS						
.080	.200	.500	.800	2	3.20	7
.100	.250	.600	1	2.5	3.50	—
.125	.300	.700	1.25	3	4	—
.150	.400	.750	1.60	3.15	5	—

Specifications

5 x 20 mm fuses designed to UL and CSA standards. Time-delay protection of electronic equipment and appliances.

Voltage Ratings 250 Vac $^{2}/_{10}$ – 3 $^{1}/_{2}$ A
125 Vac 4 – 7 A
Dimensions **L** 20 mm (.79")
D 5.2 mm (.20")
Sample Part 0239005.VXP
For fuses with axial leads, request 239_XEP series.

littelfuse.com/239

Note: All fuses on this page are available in packaged and bulk configurations

© 2023 Littelfuse, Inc.

BLADE FUSES

MINI®
Smart Glow

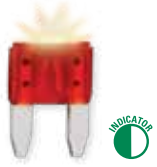

Specifications

Smart Glow fuses are innovative automotive style fuses (ATO, MINI, and MAXI) that feature an indicator light that glows when the fuse is blown, saving time to troubleshoot an open circuit.

Voltage Rating 14 Vdc
Sample Part 0MIN010.VPGLO

MINI® Fast-Acting



Specifications

The MINI® Fuse, with its miniature design patented by Littelfuse, meets the need for more circuits to be protected while utilizing less space.

Voltage Rating 32 Vdc
Sample Part 0MIN020.V

littelfuse.com/mini

Fuses Rated 58 V
Low Profile MINI®



Specifications

The low profile MINI has similar performance as the standard mini fuse. The lower overall height allows for more space and weight savings.

Voltage Rating 58 Vdc
Sample Part LMIN010.V

littelfuse.com/lmin

MINI dimensions in mm

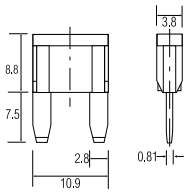

Low Profile MINI dimensions in mm (inches)

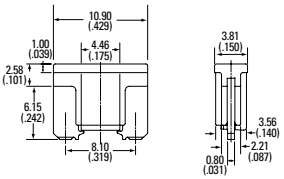

MINI Fuses are available in packaged and bulk configurations. See 297 series on web.

ATO®
Smart Glow



Specifications

Smart Glow fuses are innovative automotive style fuses (ATO, MINI, and MAXI) that feature indicator light that glows when the fuse is blown, saving time to troubleshoot an open circuit.

Voltage Rating 14 Vdc
Sample Part 0ATO010.VPGLO

ATO® Fast-Acting



Specifications

The ATO® Fuse was designed and patented by Littelfuse in 1976 and set the standard for automotive circuit protection. It features industry standard color coding to indicate amperage rating.

Voltage Rating 32 Vac/dc
Sample Part 0ATO020.V

littelfuse.com/ato

ATO dimensions in mm (inches)

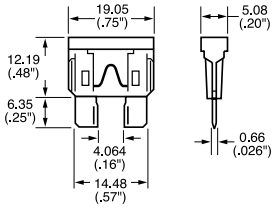

ATO® / MINI®
Color Key

CURRENT RATING	HOUSING COLOR
1 A	
2 A	
3 A	
4 A	
5 A	
7.5 A	
10 A	
15 A	
20 A	
25 A	
30 A	
40 A	

Note: MINI not available in 1 A or 40 A.

ATO Fuses are available in packaged and bulk configurations. See 287 series on web.

MAXI™
Smart Glow

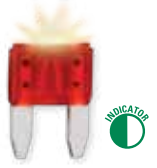

Specifications

Smart Glow fuses are innovative automotive style fuses (ATO, MINI, and MAXI) that feature an indicator light that glows when the fuse is blown, saving time to troubleshoot an open circuit.

Voltage Rating 14 Vdc
Sample Part 0MAX030.XPGLO

MAXI™ Slo-Blo



Specifications

Designed and patented by Littelfuse, the MAXI™ Fuse is ideal for motor powered applications which have large inrush currents.

Voltage Rating 32 Vdc
Sample Part 0MAX030.X

littelfuse.com/maxi

MAXI dimensions in mm (inches)

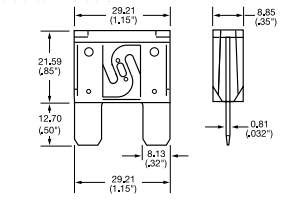

MAXI™
Color Key

CURRENT RATING	HOUSING COLOR
20 A	
25 A	
30 A	
35 A	
40 A	
50 A	
60 A	
70 A	
80 A	

MAXI Fuses are available in packaged and bulk configurations. See 299 series on web.

© 2023 Littelfuse, Inc.

BLADE FUSES

FHA Blade Fuse Holders—In-Line Fuse Holder for ATO® Style Blade Fuse

RoHS

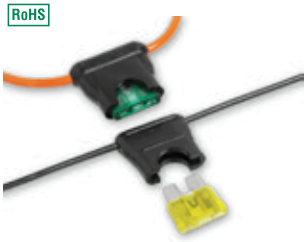

Dimensions in mm

0FHA0002

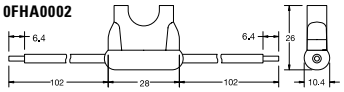

0FHA0001

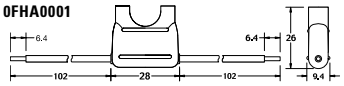

PART NUMBER	DESCRIPTION	FUSE RATING
0FHA0001_	16AWG/1.3mm² STRANDED BLACK WIRE	20 A
0FHA0002_	12AWG/3.3mm² STRANDED ORANGE WIRE	30 A

Wire length, color and diameter can be customized upon request.

Used with ATO Fuse 1 to 20 A or 25 A and 30 A. Supplied with two 4" (102mm) wire leads.

littelfuse.com/fha

FHAC Blade Fuse Holders—In-Line Splash-Waterproof Fuse Holder for ATO® Style Blade Fuse

RoHS



Dimensions in mm

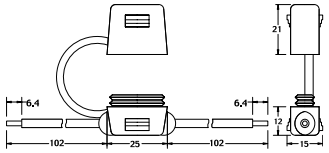

PART NUMBER	DESCRIPTION	FUSE RATING
FHAC0001_	16AWG/1.3mm² STRANDED BLACK WIRE	20 A
FHAC0002_	12AWG/3.3mm² STRANDED ORANGE WIRE	30 A

Wire length, color and diameter can be customized upon request.

Used with ATO Fuse 1 to 20 A or 25 A and 30 A. Supplied with two 4" (102mm) wire leads. Includes protective cover for harsh environments.

littelfuse.com/fha

FHM Blade Fuse Holders—In-Line Splash-Waterproof Fuse Holder for MINI® Style Blade Fuse

RoHS



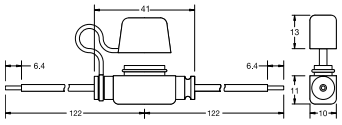

PART NUMBER	DESCRIPTION	FUSE RATING
0FHM0001_	14AWG/2.1mm² STRANDED BLACK WIRE	20 A
0FHM0002_	12AWG/3.3mm² STRANDED ORANGE WIRE	30 A

Wire length, color and diameter can be customized upon request.

Used with MINI Fuse 1 to 20 A or 25 A and 30 A. Supplied with two 4.78" (122 mm) wire leads. Includes protective cover for harsh environment.

littelfuse.com/fhm

MAH Blade Fuse Holders—In-Line Fuse Holder for MAXI™ Style Blade Fuse



Dimensions in mm

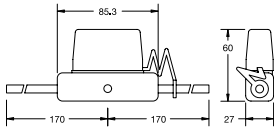

PART NUMBER	DESCRIPTION	FUSE RATING
0MAH0001Z	WIRE COLOR BLACK	60 A

Supplied with two 6", 6-gauge wire leads for up to 60 A MAXI Fuse applications, this In-Line Fuse holder also provides a protective cover for harsh under-the-hood environments. Mounting hole permits easy bulkhead installation.

littelfuse.com/mah

JCASE® Cartridge Fuse Rated 32 V

RoHS Pb



Specifications

The JCASE is a cartridge style fuse with female terminal design. JCASE provides both increased time delay and low voltage drop to protect high current circuits. JCASE has the ability to handle in-rush currents. The JCASE was designed and patented by Littelfuse.

littelfuse.com/jcase

Low Profile JCASE® Fuse Rated 58 V

RoHS Pb



Specifications

The Low Profile JCASE fuse has similar performance characteristics as the standard JCASE fuse. The lower overall height reduction allows for more space and weight savings and also allows for a shorter male blade terminal, saving additional weight and material savings in fuse box designs.

JCASE® 32 V
Dimensions in mm

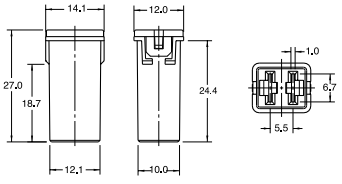

Low Profile JCASE® 58 V
Dimensions in mm

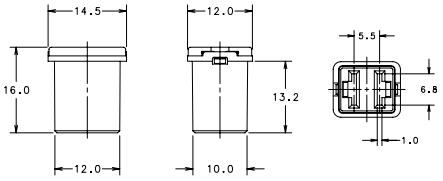

JCASE® Color Key

CURRENT RATING	HOUSING COLOR
20 A	
25 A	
30 A	
40 A	
50 A	
60 A	

THIS PAGE INTENTIONALLY LEFT BLANK

 © 2023 Littelfuse, Inc.

Section Overview

Littelfuse is your source for a fast replacement of E- and R-rated medium voltage fuses. Our emergency service gets you the fuses you need quickly to minimize downtime of your critical operations.







MEDIUM VOLTAGE FUSES

Table of Contents

Medium Voltage Fuses Overview 59

R-Rated Medium Voltage Fuses 61

E-Rated Medium Voltage Fuses 63

Medium Voltage Live Parts 69

© 2023 Littelfuse, Inc.

MEDIUM VOLTAGE FUSES

2,400-38,000 Vac • Current-Limiting



Description

Littelfuse® offers a selection of E- and R-rated medium voltage fuses for the protection of transformers, potential transformers, feeders, and motor circuits. Single, double, and triple barrel designs are available to cover a wide range of current, voltage, and interrupting ratings. Conventional ferrule type, clip lock, and bolt-in mounting configurations are available for virtually any application. Hermetically sealed fuses for use in hazardous environments are also offered.

Contact the factory or your local Littelfuse representative for additional fuse ratings or custom mounting configurations.

24-Hour Emergency Service - Call 800-227-0029

Applications

- Power Transformer Protection
- Potential Transformer Protection
- Motor Controller Back-up Protection
- Fused Switches
- Feeder Circuits



Current-limiting E- and R-rated fuses are equipped with a mechanical indicator or striker pin that protrudes through the fuse cap upon operation of the fuse. This provides visual identification of a blown fuse and can be used as a trigger for external devices.

Note: Extension distance ½" minimum; extension force 2 lb. minimum.

General Information

The terms "Medium Voltage" and "High Voltage" have been used interchangeably by many people to describe fuses operating above 600 volts. Technically speaking, medium voltage fuses are those intended for the voltage range from 2,400 to 38,000 Vac. High voltage fuses are for circuits carrying voltages greater than 38,000 Vac.

E-rated fuses are considered to be general purpose fuses and can be used to protect against low and high values of fault current. R-rated fuses are designed for back-up protection. They must be used in series with other devices such as motor overload relays in order to achieve both overload and short-circuit protection.

Medium voltage fuses are not intended to provide overload protection in the same sense as fuses rated 600 volts or less. Medium voltage fuse current ratings do not have the same meanings as the ampere ratings of low voltage fuses.

All medium voltage fuses are limited in their ability to interrupt low value overcurrents, especially those between 100% and 200% of the fuse's continuous current rating. They are designed to carry their rated current without exceeding the temperature rise permitted by NEMA and ANSI standards.



Bolt-in Mount Fuses

© 2023 Littelfuse, Inc.

R-RATED MEDIUM VOLTAGE FUSES

Description

R-rated fuses provide required short-circuit protection for medium voltage motors, motor controllers and associated circuitry. These components have limited ability to absorb the energy of large short-circuit currents. Medium voltage motor controllers contain overload relays which provide both overload protection and locked rotor protection to the motor. The controllers are also intended to interrupt low value short-circuits within the capability of the motor controller. This protects the medium voltage fuse from sustained overcurrents which are less than their minimum interrupting rating.

NEMA Standards for R-rated medium voltage power fuses require they operate within 15–35 seconds when subjected to an rms current 100 times the R rating. For example, a fuse with a 2R rating will open within 15 to 35 seconds on an applied current of 2 x 100 = 200 amperes.

Ordering Number

130-4R-1C-5.5

- Max Voltage (KV)
- Style:
  - C (Cartridge)
  - B (Bolt Mount)
  - IB (Inverted Bolt Mount)
  - BI (Bolt-In Mount)
- No. of Barrels
- Rating (size)
- Continuous Current

Dimensions

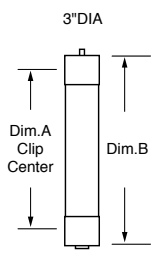

Figure 1

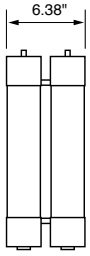

Figure 2

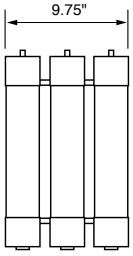

Figure 3

Cartridge "C"

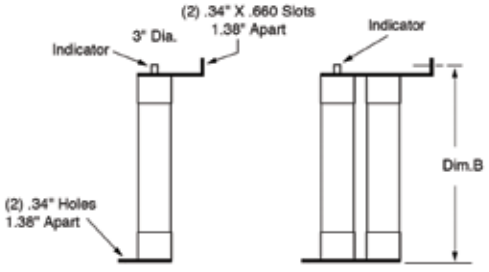

Bolt Mount "B"

Sample Part #: 130-4R-1B-5.5

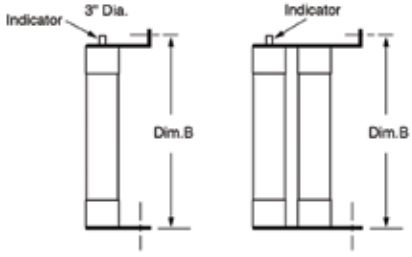

Inverted-Bolt "IB"

Sample Part #: 130-4R-1IB-5.5

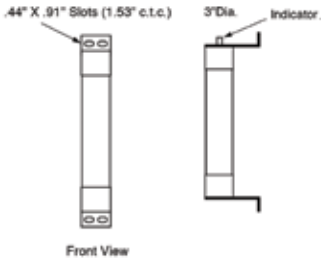

Bolt-In Mount "BI"

Sample Part #: 130-4R-1BI-5.5

Characteristics

Voltage Ratings	2,750 V – 8,250 V
Current Range	2R – 36R

Options

- Hermetically sealed for use in hazardous locations (add "S" suffix to part number)
- Bolt-in mounting configurations



Hookeye Feature*

For hookeye attachment; add "W" suffix to part number

*See web for Bolt Mount, Inverted Bolt Mount, and Bolt-In dimensions

Medium Voltage Fuse Protection



POWR-GARD® medium voltage fuses provide short-circuit protection for motors and transformers rated 2,400 to 38,000 volts AC. Visit **Littelfuse.com/MediumVoltage** to download the white paper featuring protection tables, sizing recommendations, and applications.

© 2023 Littelfuse, Inc.

R-RATED MEDIUM VOLTAGE FUSES

R RATED	ORDERING/ CATALOG NUMBER	SIZE	MAXIMUM CONTINUOUS CURRENT @ 40 DEGREES C°	DIM. A (INCHES)	DIM. B (INCHES)	MINIMUM INTERRUPTING RATING RMS AMPS	MAXIMUM INTERRUPTING RATING RMS (ASYM)*	FIGURE NUMBER
2.75 KV	702R1C2.75	2R	70	7"	10.875"	170	80,000	1
	1003R1C2.75	3R	100	7"	10.875"	250	80,000	1
	1304R1C2.75	4R	130	7"	10.875"	340	80,000	1
	1505R1C2.75	5R	150	7"	10.875"	390	80,000	1
	1706R1C2.75	6R	170	7"	10.875"	500	80,000	1
	2009R1C2.75	9R	200	7"	10.875"	760	80,000	1
	23012R1C2.75	12R	230	7"	10.875"	1000	80,000	1
	39018R2C2.75	18R	390	7"	10.875"	1500	80,000	2
	45024R2C2.75	24R	450	7"	10.875"	1950	80,000	2

R RATED	ORDERING/ CATALOG NUMBER	SIZE	MAXIMUM CONTINUOUS CURRENT @ 40 DEGREES C°	DIM. A (INCHES)	DIM. B (INCHES)	MINIMUM INTERRUPTING RATING RMS AMPS	MAXIMUM INTERRUPTING RATING RMS (ASYM)*	FIGURE NUMBER
5.5 KV	702R1C5.5	2R	70	12"	15.875"	170	80,000	1
	1003R1C5.5	3R	100	12"	15.875"	250	80,000	1
	1304R1C5.5	4R	130	12"	15.875"	340	80,000	1
	1505R1C5.5	5R	150	12"	15.875"	390	80,000	1
	1706R1C5.5	6R	170	12"	15.875"	500	80,000	1
	2009R1C5.5	9R	200	12"	15.875"	760	80,000	1
	23012R1C5.5	12R	230	12"	15.875"	1000	80,000	1
	39018R2C5.5	18R	390	12"	15.875"	1500	80,000	2
	45024R2C5.5	24R	450	12"	15.875"	1950	80,000	2
	48026R2C5.5	26R	480	12"	15.875"	2100	80,000	2
	55030R2C5.5	30R	550	12"	15.875"	2400	80,000	2
	60032R2C5.5	32R	600	12"	15.875"	2600	80,000	2
	65036R2C5.5	36R	650	12"	15.875"	2900	80,000	2
	55030R3C5.5	30R	550	12"	15.875"	2400	80,000	3
	60032R3C5.5	32R	600	12"	15.875"	2600	80,000	3
	65036R3C5.5	36R	650	12"	15.875"	2900	80,000	3

R RATED	ORDERING/ CATALOG NUMBER	SIZE	MAXIMUM CONTINUOUS CURRENT @ 40 DEGREES C°	DIM. A (INCHES)	DIM. B (INCHES)	MINIMUM INTERRUPTING RATING RMS AMPS	MAXIMUM INTERRUPTING RATING RMS (ASYM)*	FIGURE NUMBER
5.5 KV 14"CLIP CENTERS	702R1C5.5X	2R	70	14"	17.875"	170	80,000	1
	1003R1C5.5X	3R	100	14"	17.875"	250	80,000	1
	1304R1C5.5X	4R	130	14"	17.875"	340	80,000	1
	1505R1C5.5X	5R	150	14"	17.875"	390	80,000	1
	1706R1C5.5X	6R	170	14"	17.875"	500	80,000	1
	2009R1C5.5X	9R	200	14"	17.875"	760	80,000	1
	23012R1C5.5X	12R	230	14"	17.875"	1000	80,000	1
	39018R2C5.5X	18R	390	14"	17.875"	1500	80,000	2
	45024R2C5.5X	24R	450	14"	17.875"	1950	80,000	2
	55030R2C5.5X	30R	550	14"	17.875"	2400	80,000	2

R RATED	ORDERING/ CATALOG NUMBER	SIZE	MAXIMUM CONTINUOUS CURRENT @ 40 DEGREES C°	DIM. A (INCHES)	DIM. B (INCHES)	MINIMUM INTERRUPTING RATING RMS AMPS	MAXIMUM INTERRUPTING RATING RMS (ASYM)*	FIGURE NUMBER
8.25 KV	702R1C8.25	2R	70	12"	15.875"	190	80,000	1
	1003R1C8.25	3R	100	12"	15.875"	225	80,000	1
	1304R1C8.25	4R	130	12"	15.875"	330	80,000	1
	1505R1C8.25	5R	150	12"	15.875"	440	80,000	1
	1706R1C8.25	6R	170	12"	15.875"	500	80,000	1
	2009R1C8.25	9R	200	12"	15.875"	740	80,000	1
	23012R1C8.25	12R	230	12"	15.875"	955	80,000	1
	39018R2C8.25	18R	390	12"	15.875"	1440	80,000	2
	45024R2C8.25	24R	450	12"	15.875"	1910	80,000	2

* RMS Asymmetrical amperes = RMS Symmetrical amperes x 1.6
For hookeye attachment add "W" suffix to part number

© 2023 Littelfuse, Inc.

E-RATED MEDIUM VOLTAGE FUSES

Description

E-rated fuses have time current characteristics designed to provide current-limiting protection for power transformers, potential transformers, power centers, feeder centers, and unit sub stations. When properly applied, they can protect against high and low fault currents.

NEMA Standards for E-rated medium voltage fuses require that fuses rated 100E or less open within 300 seconds (5 minutes) when subjected to an RMS value of 200-240% of the fuse continuous current rating; and fuses with an E rating larger than 100E must open within 600 seconds (10 minutes) when subjected to an RMS current of 220-240% of the fuse's continuous current rating. These values establish one point on the time-current curve.

Application Note

Since these fuses are used for the protection of general purpose circuits which may contain transformers, motors, and other equipment producing in-rush and/or overload currents, fuses should generally be rated at 140% of the normal full load current, and circuits should be analyzed to ensure that system load currents will not exceed the current rating of the fuse.

Characteristics

Voltage Ratings 2,750 V – 38,000 V
Current Range 10E – 600E

Options

- Hermetically sealed for use in hazardous locations (add "S" suffix to part number)
- Clip-lock (CL) available.

Dimensions

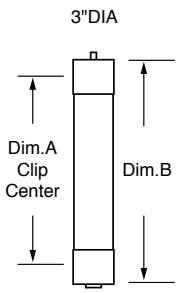

Figure 4

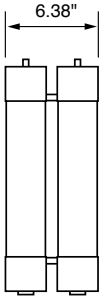

Figure 5

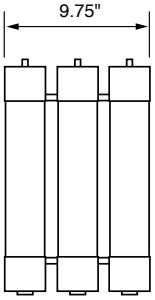

Figure 6

E-RATED	ORDERING/CATALOG NUMBER	SIZE	DIM. A (INCHES)	DIM. B (INCHES)	MAX INTERRUPTING RATING RMS (ASYM)*	FIGURE NUMBER
2.75 MAX. KV	10E1C2.75	10E	7"	10.875"	80,000	4
	15E1C2.75	15E	7"	10.875"	80,000	4
	20E1C2.75	20E	7"	10.875"	80,000	4
	25E1C2.75	25E	7"	10.875"	80,000	4
	30E1C2.75	30E	7"	10.875"	80,000	4
	40E1C2.75	40E	7"	10.875"	80,000	4
	50E1C2.75	50E	7"	10.875"	80,000	4
	65E1C2.75	65E	7"	10.875"	80,000	4
	80E1C2.75	80E	7"	10.875"	80,000	4
	100E-1C2.75	100E	7"	10.875"	80,000	4
	125E1C2.75	125E	7"	10.875"	80,000	4
	150E1C2.75	150E	7"	10.875"	80,000	4
	200E1C2.75	200E	7"	10.875"	80,000	4
	125E2C2.75	125E	7"	10.875"	80,000	5
	150E2C2.75	150E	7"	10.875"	80,000	5
	200E2C2.75	200E	7"	10.875"	80,000	5
	250E2C2.75	250E	7"	10.875"	80,000	5
	300E2C2.75	300E	7"	10.875"	80,000	5
	350E2C2.75	350E	7"	10.875"	80,000	5
	400E2C2.75	400E	7"	10.875"	80,000	5
	450E2C2.75	450E	7"	10.875"	80,000	5

* RMS Asymmetrical amperes = RMS Symmetrical amperes x 1.6

© 2023 Littelfuse, Inc.

E-RATED MEDIUM VOLTAGE FUSES

E-RATED	ORDERING/CATALOG NUMBER	SIZE	DIM. A (INCHES)	DIM. B (INCHES)	MAX INTERRUPTING RATING RMS (ASYM)*	FIGURE NUMBER
5.5 MAX. KV	10E1C5.5	10E	12"	15.875"	80,000	4
	15E1C5.5	15E	12"	15.875"	80,000	4
	20E1C5.5	20E	12"	15.875"	80,000	4
	25E1C5.5	25E	12"	15.875"	80,000	4
	30E1C5.5	30E	12"	15.875"	80,000	4
	40E1C5.5	40E	12"	15.875"	80,000	4
	50E1C5.5	50E	12"	15.875"	80,000	4
	65E1C5.5	65E	12"	15.875"	80,000	4
	80E1C5.5	80E	12"	15.875"	80,000	4
	100E1C5.5	100E	12"	15.875"	80,000	4
	125E1C5.5	125E	12"	15.875"	80,000	4
	150E1C5.5	150E	12"	15.875"	80,000	4
	175E1C5.5	175E	12"	15.875"	80,000	4
	200E1C5.5	200E	12"	15.875"	80,000	4
	125E2C5.5	125E	12"	15.875"	80,000	5
	150E2C5.5	150E	12"	15.875"	80,000	5
	200E2C5.5	200E	12"	15.875"	80,000	5
	250E2C5.5	250E	12"	15.875"	80,000	5
	300E2C5.5	300E	12"	15.875"	80,000	5
	350E2C5.5	350E	12"	15.875"	80,000	5
	400E2C5.5	400E	12"	15.875"	80,000	5
	450E2C5.5	450E	12"	15.875"	80,000	5
	500E3C5.5	500E	12"	15.875"	80,000	6
	550E3C5.5	550E	12"	15.875"	80,000	6
	600E3C5.5	600E	12"	15.875"	80,000	6

E-RATED	ORDERING/CATALOG NUMBER	SIZE	DIM. A (INCHES)	DIM. B (INCHES)	MAX INTERRUPTING RATING RMS (ASYM)*	FIGURE NUMBER
5.5 MAX. KV	5NLE10E	10E	14"	17⅞"	80,000	4
	5NLE15E	15E	14"	17⅞"	80,000	4
	5NLE20E	20E	14"	17⅞"	80,000	4
	5NLE25E	25E	14"	17⅞"	80,000	4
	5NLE30E	30E	14"	17⅞"	80,000	4
	5NLE40E	40E	14"	17⅞"	80,000	4
	5NLE50E	50E	14"	17⅞"	80,000	4
	5NLE65E	65E	14"	17⅞"	80,000	4
	5NLE80E	80E	14"	17⅞"	80,000	4
	5NLE100E	100E	14"	17⅞"	80,000	4
	5NLE125E	125E	14"	17⅞"	80,000	4
	5NLE150E	150E	14"	17⅞"	80,000	4
	5NLE175E	175E	14"	17⅞"	80,000	4
	5NLE200E	200E	14"	17⅞"	80,000	4
	5NLE2225E	225E	14"	17⅞"	80,000	5
	5NLE2250E	250E	14"	17⅞"	80,000	5
	5NLE2300E	300E	14"	17⅞"	80,000	5
	5NLE2350E	350E	14"	17⅞"	80,000	5
	5NLE2400E	400E	14"	17⅞"	80,000	5
	5NLE2450E	450E	14"	17⅞"	80,000	5

* RMS Asymmetrical amperes = RMS Symmetrical amperes x 1.6

© 2023 Littelfuse, Inc.

E-RATED MEDIUM VOLTAGE FUSES

E-RATED	ORDERING/CATALOG NUMBER	SIZE	DIM. A (INCHES)	DIM. B (INCHES)	MAX INTERRUPTING RATING RMS (ASYM)*	FIGURE NUMBER
8.25 MAX. KV	10E1C8.25	10E	12"	15⅞"	80,000,	4
	15E1C8.25	15E	12"	15⅞"	80,000	4
	20E1C8.25	20E	12"	15⅞"	80,000	4
	25E1C8.25	25E	12"	15⅞"	80,000	4
	30E1C8.25	30E	12"	15⅞"	80,000	4
	40E1C8.25	40E	12"	15⅞"	80,000	4
	50E1C8.25	50E	12"	15⅞"	80,000	4
	65E1C8.25	65E	12"	15⅞"	80,000	4
	80E1C8.25	80E	12"	15⅞"	80,000	4
	100E1C8.25	100E	12"	15⅞"	80,000	4
	125E1C8.25	125E	12"	15⅞"	80,000	4
	150E1C8.25	150E	12"	15⅞"	80,000	4
	125E2C8.25	125E	12"	15⅞"	80,000	5
	150E2C8.25	150E	12"	15⅞"	80,000	5
	200E2C8.25	200E	12"	15⅞"	80,000	5
	250E2C8.25	250E	12"	15⅞"	80,000	5
	300E2C8.25	300E	12"	15⅞"	80,000	5
	350E3C8.25	350E	12"	15⅞"	80,000	6
	400E3C8.25	400E	12"	15⅞"	80,000	6

E-RATED	ORDERING/CATALOG NUMBER	SIZE	DIM. A (INCHES)	DIM. B (INCHES)	MAX INTERRUPTING RATING RMS (ASYM)*	FIGURE NUMBER
8.25 MAX. KV	8NLE10E	10E	14"	17⅞"	80,000	4
	8NLE15E	15E	14"	17⅞"	80,000	4
	8NLE20E	20E	14"	17⅞"	80,000	4
	8NLE25E	25E	14"	17⅞"	80,000	4
	8NLE30E	30E	14"	17⅞"	80,000	4
	8NLE40E	40E	14"	17⅞"	80,000	4
	8NLE50E	50E	14"	17⅞"	80,000	4
	8NLE65E	65E	14"	17⅞"	80,000	4
	8NLE80E	80E	14"	17⅞"	80,000	4
	8NLE100E	100E	14"	17⅞"	80,000	4
	8NLE2100E	100E	14"	17⅞"	80,000	5
	8NLE2125E	125E	14"	17⅞"	80,000	5
	8NLE2150E	150E	14"	17⅞"	80,000	5
	8NLE2200E	200E	14"	17⅞"	80,000	5
	8NLE2250E	250E	14"	17⅞"	80,000	5

E-RATED	ORDERING/CATALOG NUMBER	SIZE	DIM. A (INCHES)	DIM. B (INCHES)	MAX INTERRUPTING RATING RMS (ASYM)*	FIGURE NUMBER
15.5 MAX. KV	10E1C15.5	10E	15"	18.875"	80,000	4
	15E1C15.5	15E	15"	18.875"	80,000	4
	20E1C15.5	20E	15"	18.875"	80,000	4
	25E1C15.5	25E	15"	18.875"	80,000	4
	30E1C15.5	30E	15"	18.875"	80,000	4
	40E1C15.5	40E	15"	18.875"	80,000	4
	50E1C15.5	50E	15"	18.875"	80,000	4
	65E1C15.5	65E	15"	18.875"	80,000	4
	80E1C15.5	80E	15"	18.875"	80,000	4
	100E1C15.5	100E	15"	18.875"	80,000	4
	65E2C15.5	65E	15"	18.875"	80,000	5
	80E2C15.5	80E	15"	18.875"	80,000	5
	100E2C15.5	100E	15"	18.875"	80,000	5
	125E2C15.5	125E	15"	18.875"	80,000	5
	150E2C15.5	150E	15"	18.875"	80,000	5
	175E2C15.5	175E	15"	18.875"	80,000	5
	200E2C15.5	200E	15"	18.875"	80,000	5
	200E3C15.5	200E	15"	18.875"	80,000	6
	250E3C15.5	250E	15"	18.875"	80,000	6
	300E3C15.5	300E	15"	18.875"	80,000	6

* RMS Asymmetrical amperes = RMS Symmetrical amperes x 1.6

© 2023 Littelfuse, Inc.

E-RATED MEDIUM VOLTAGE FUSES

E-RATED	ORDERING/CATALOG NUMBER	SIZE	DIM. A (INCHES)	DIM. B (INCHES)	MAX INTERRUPTING RATING RMS (ASYM)*	FIGURE NUMBER
15.5 MAX. KV	15GSE65E	65E	18"	21 7/8"	60,000	4
	15GSE80E	80E	18"	21 7/8"	60,000	4
	15GSE100E	100E	18"	21 7/8"	60,000	4
	15GSE2125E	125E	18"	21 7/8"	60,000	5
	15GSE2150E	150E	18"	21 7/8"	60,000	5
	15GSE2175E	175E	18"	21 7/8"	60,000	5
	15GSE2200E	200E	18"	21 7/8"	60,000	5

E-RATED	ORDERING/CATALOG NUMBER	SIZE	DIM. A (INCHES)	DIM. B (INCHES)	MAX INTERRUPTING RATING RMS (ASYM)*	FIGURE NUMBER
15.5 MAX. KV	15NLE10E	10E	20"	23 7/8"	60,000	4
	15NLE15E	15E	20"	23 7/8"	60,000	4
	15NLE20E	20E	20"	23 7/8"	60,000	4
	15NLE25E	25E	20"	23 7/8"	60,000	4
	15NLE30E	30E	20"	23 7/8"	60,000	4
	15NLE40E	40E	20"	23 7/8"	60,000	4
	15NLE50E	50E	20"	23 7/8"	60,000	4
	15NLE65E	65E	20"	23 7/8"	60,000	4
	15NLE80E	80E	20"	23 7/8"	60,000	4
	15NLE100E	100E	20"	23 7/8"	60,000	4
	15NLE280E	80E	20"	23 7/8"	60,000	5
	15NLE2100E	100E	20"	23 7/8"	60,000	5
	15NLE2125E	125E	20"	23 7/8"	60,000	5
	15NLE2150E	150E	20"	23 7/8"	60,000	5
	15NLE2175E	175E	20"	23 7/8"	60,000	5
	15NLE2200E	200E	20"	23 7/8"	60,000	5
	15NLE3150E	150E	20"	23 7/8"	60,000	6
	15NLE3175E	175E	20"	23 7/8"	60,000	6
	15NLE3250E	250E	20"	23 7/8"	60,000	6
	15NLE3300E	300E	20"	23 7/8"	60,000	6

E-RATED	ORDERING/CATALOG NUMBER	SIZE	DIM. A (INCHES)	DIM. B (INCHES)	MAX INTERRUPTING RATING RMS (ASYM)*	FIGURE NUMBER
25.8 MAX. KV	15E1C25.8	15E	21"	24 7/8"	40,000	4
	20E1C25.8	20E	21"	24 7/8"	40,000	4
	25E1C25.8	25E	21"	24 7/8"	40,000	4
	30E1C25.8	30E	21"	24 7/8"	40,000	4
	40E1C25.8	40E	21"	24 7/8"	40,000	4
	50E1C25.8	50E	21"	24 7/8"	40,000	4
	65E2C25.8	65E	21"	24 7/8"	40,000	5
	80E2C25.8	80E	21"	24 7/8"	40,000	5
	100E2C25.8	100E	21"	24 7/8"	40,000	5

E-RATED	ORDERING/CATALOG NUMBER	SIZE	DIM. A (INCHES)	DIM. B (INCHES)	MAX INTERRUPTING RATING RMS (ASYM)*	FIGURE NUMBER
38 MAX. KV	3E1C38.0	3E	27"	30 7/8"	20,000	4
	7E1C38.0	7E	27"	30 7/8"	20,000	4
	10E1C38.0	10E	27"	30 7/8"	20,000	4
	15E1C38.0	15E	27"	30 7/8"	20,000	4
	20E1C38.0	20E	27"	30 7/8"	20,000	4
	25E1C38.0	25E	27"	30 7/8"	20,000	4
	30E1C38.0	30E	27"	30 7/8"	20,000	4
	40E1C38.0	40E	27"	30 7/8"	20,000	4
	50E2C38.0	50E	27"	30 7/8"	20,000	5
	65E2C38.0	65E	27"	30 7/8"	20,000	5
	80E2C38.0	80E	27"	30 7/8"	20,000	5

* RMS Asymmetrical amperes = RMS Symmetrical amperes x 1.6

© 2023 Littelfuse, Inc.

E-RATED MEDIUM VOLTAGE FUSES

Clip Lock Design

The clip lock type designs ensures a positive contact between the fuse and the connection cam. The fuse's clip lock tab slides in between the clip casting and the cam to prevent the fuse from slipping or blowing out of the holder. This positive contact improves heat dissipation and allows fuses to run cooler.

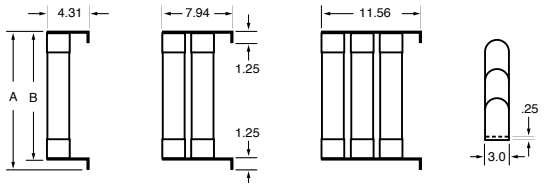

Figure 7 **Figure 8** **Figure 9**

Dimensions in inches

E-RATED	ORDERING/CATALOG NUMBER	SIZE	DIM. A (INCHES)	DIM. B (INCHES)	MAX INTERRUPTING RATING RMS (ASYM)*	FIGURE NUMBER
5.5 MAX. KV CLIP LOCK	10E1CL5.5	10E	16.38"	15.13"	80,000	7
	15E1CL5.5	15E	16.38"	15.13"	80,000	7
	20E1CL5.5	20E	16.38"	15.13"	80,000	7
	25E1CL5.5	25E	16.38"	15.13"	80,000	7
	30E1CL5.5	30E	16.38"	15.13"	80,000	7
	40E1CL5.5	40E	16.38"	15.13"	80,000	7
	50E1CL5.5	50E	16.38"	15.13"	80,000	7
	65E1CL5.5	65E	16.38"	15.13"	80,000	7
	80E1CL5.5	80E	16.38"	15.13"	80,000	7
	100E1CL5.5	100E	16.38"	15.13"	80,000	7
	125E1CL5.5	125E	16.38"	15.13"	80,000	7
	150E1CL5.5	150E	16.38"	15.13"	80,000	7
	225E2CL5.5	225E	17.38"	16.13"	80,000	8
	250E2CL5.5	250E	17.38"	16.13"	80,000	8
	300E2CL5.5	300E	17.38"	16.13"	80,000	8
	350E2CL5.5	350E	17.38"	16.13"	80,000	8
	400E2CL5.5	400E	17.38"	16.13"	80,000	8
	450E2CL5.5	450E	17.38"	16.13"	80,000	8
	500E3CL5.5	500E	17.38"	16.13"	80,000	9
	550E3CL5.5	550E	17.38"	16.13"	80,000	9
	600E3CL5.5	600E	17.38"	16.13"	80,000	9

E-RATED	ORDERING/CATALOG NUMBER	SIZE	DIM. A (INCHES)	DIM. B (INCHES)	MAX INTERRUPTING RATING RMS (ASYM)*	FIGURE NUMBER
8.25 MAX. KV CLIP LOCK	10E1CL8.25	10E	17.38"	16.13"	80,000	7
	15E1CL8.25	15E	17.38"	16.13"	80,000	7
	20E1C8.25	20E	17.38"	16.13"	80,000	7
	25E1CL8.25	25E	17.38"	16.13"	80,000	7
	30E1CL8.25	30E	17.38"	16.13"	80,000	7
	40E1CL8.25	40E	17.38"	16.13"	80,000	7
	50E1CL8.25	50E	17.38"	16.13"	80,000	7
	65E1CL8.25	65E	17.38"	16.13"	80,000	7
	80E1CL8.25	80E	17.38"	16.13"	80,000	7
	100E1CL8.25	100E	17.38"	16.13"	80,000	7
	125E2CL8.25	125E	17.38"	16.13"	80,000	8
	150E2CL8.25	150E	17.38"	16.13"	80,000	8
	175E2CL8.25	175E	17.38"	16.13"	80,000	8
	200E2CL8.25	200E	17.38"	16.13"	80,000	8
	225E2CL8.25	225E	17.38"	16.13"	80,000	8
	250E2CL8.25	250E	17.38"	16.13"	80,000	8
	300E2CL8.25	300E	17.38"	16.13"	80,000	8
	350E3CL8.25	350E	17.38"	16.13"	80,000	9

E-RATED	ORDERING/CATALOG NUMBER	SIZE	DIM. A (INCHES)	DIM. B (INCHES)	MAX INTERRUPTING RATING RMS (ASYM)*	FIGURE NUMBER
15.5 MAX. KV CLIP LOCK	10E1CL15.5	10E	19.8"	18.1"	60,000	7
	15E1CL15.5	15E	19.8"	18.1"	60,000	7
	20E1CL15.5	20E	19.8"	18.1"	60,000	7
	25E1CL15.5	25E	19.8"	18.1"	60,000	7
	30E1CL15.5	30E	19.8"	18.1"	60,000	7
	40E1CL15.5	40E	19.8"	18.1"	60,000	7
	50E1CL15.5	50E	19.8"	18.1"	60,000	7
	65E1CL15.5	65E	22.81"	21.13"	60,000	7
	80E1CL15.5	80E	22.81"	21.13"	60,000	7
	100E1CL15.5	100E	22.81"	21.13"	60,000	7
	125E2CL15.5	125E	22.81"	21.13"	60,000	8
	150E2CL15.5	150E	22.81"	21.13"	60,000	8
	175E2CL15.5	175E	22.81"	21.13"	60,000	8
	200E2CL15.5	200E	22.81"	21.13"	60,000	8
	150E3CL15.5	150E	22.81"	21.13"	60,000	9
	200E3CL15.5	200E	22.81"	21.13"	60,000	9
	250E3CL15.5	250E	22.81"	21.13"	60,000	9
	300E3CL15.5	300E	22.81"	21.13"	60,000	9

* RMS Asymmetrical amperes = RMS Symmetrical amperes x 1.6

© 2023 Littelfuse, Inc.

E-RATED POTENTIAL TRANSFORMER FUSES

Description

Potential Transformer (PT) fuses are current-limiting fuses with high interrupting ratings designed for the protection of potential transformers.

Application Note

When applying fuses for the protection of transformers, the magnetizing current in-rush must be considered. The characteristics of the in-rush, which can be matched with a fuse time-current curve, should be available from the transformer manufacturer.

Characteristics

Voltage Ratings 625 Vac – 25,800 Vac
Current Range ½E – 10E

Dimensions

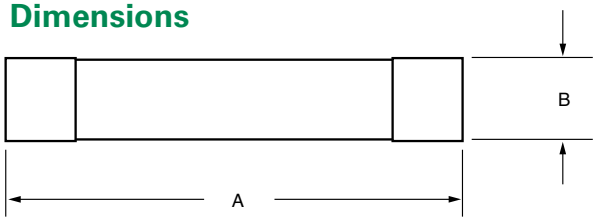

E-RATED	ORDERING/CATALOG NUMBER	SIZE	LENGTH DIM. A (INCHES)	DIAMETER DIM. B (INCHES)	MAX INTERRUPTING RATING RMS (ASYM)*
625 VOLT	3E4PT.6	3E	4.6"	0.8125"	37,500
	5E4PT.6	5E	4.6"	0.8125"	37,500
	7E4PT.6	7E	4.6"	0.8125"	37,500
	10E4PT.6	10E	4.6"	0.8125"	37,500
2.75 MAX. KV	500E4PT2.4	½E	4.6"	0.8125"	37,500
	1E4PT2.4	1E	4.6"	0.8125"	37,500
	2E4PT2.4	2E	4.6"	0.8125"	37,500
2.75 MAX. KV	1E6PT2.75	1E	7.4"	1.5625"	37,500
	2E6PT2.75	2E	7.4"	1.5625"	37,500
	3E6PT2.75	3E	7.4"	1.5625"	37,500
	1E8PT2.75	1E	9.5"	1.5625"	37,500
	2E8PT2.75	2E	9.5"	1.5625"	37,500
	3E8PT2.75	3E	9.5"	1.5625"	37,500
4.8 MAX. KV	1E5PT4.8	1E	5.6"	0.8125"	50,000
	2E5PT4.8	2E	5.6"	0.8125"	50,000
5.5 MAX. KV	500E6PT5.5	½E	7.4"	1.5625"	50,000
	1E6PT5.5	1E	7.4"	1.5625"	50,000
	2E6PT5.5	2E	7.4"	1.5625"	50,000
	3E6PT5.5	3E	7.4"	1.5625"	50,000
	5E6PT5.5	5E	7.4"	1.5625"	50,000
	500E8PT5.5	½E	9.5"	1.5625"	50,000
	1E8PT5.5	1E	9.5"	1.5625"	50,000
	2E8PT5.5	2E	9.5"	1.5625"	50,000
	3E8PT5.5	3E	9.5"	1.5625"	50,000
	5E8PT5.5	5E	9.5"	1.5625"	50,000
	10E8PT5.5	10E	9.5"	1.5625"	50,000
8.25 MAX. KV	500E8PT8.25	½E	9.5"	1.5625"	50,000
	1E8PT8.25	1E	9.5"	1.5625"	50,000
	2E8PT8.25	2E	9.5"	1.5625"	50,000
	3E8PT8.25	3	9.5"	1.5625"	50,000
15.5 MAX. KV	500E11PT15.5	½E	12.8"	1.5625"	35,000
	1E11PT15.5	1E	12.8"	1.5625"	35,000
	2E11PT15.5	2E	12.8"	1.5625"	35,000
	3E11PT15.5	3E	12.8"	1.5625"	35,000
	3E16PT15.5	3E	17.5"	1.5625"	35,000
	5E16PT15.5	5E	17.5"	1.5625"	35,000
25.8 MAX. KV	500E16PT25.5	½E	17.5"	1.5625"	32,000
	1E16PT25.5	1E	17.5"	1.5625"	32,000

* RMS Asymmetrical amperes = RMS Symmetrical amperes x 1.6

© 2023 Littelfuse, Inc.

LIVE PARTS



Description

Live parts are available for mounting E, R, and PT single, double, and triple barrel fuses. Mounting clips are available for ferrule type and clip lock style fuses. All clips are sold in pairs.

Part Number 700-156

Ordering Number 0700156.Z

For use with $1^{9}/_{16}$" (1.5625") to $1^{5}/_{8}$" (1.625") diameter PT fuses.

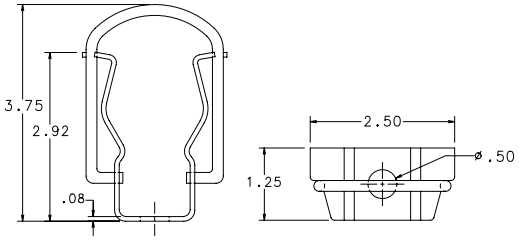

Dimensions in inches

Part Number 700-300

Ordering Number 0700300.Z

For use with 3" diameter fuses.

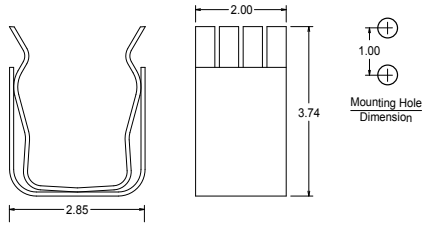

Part Number 700-500

Ordering Number 0700500.Z

For use with all $^{13}/_{16}$" (.8125") diameter PT fuses

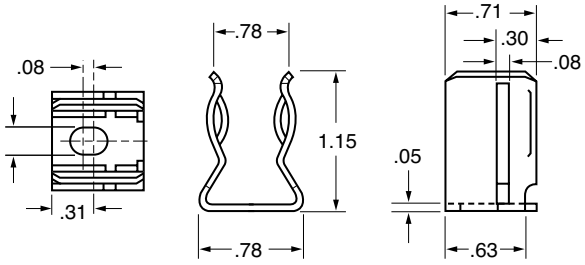

Dimensions in inches

Part Number 700-530

Ordering Number 0700530.Z

For use with all 3" diameter fuses.

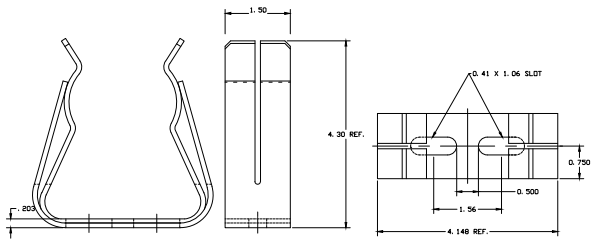

Part Number 700-520-CL

Ordering Number 0700520.ZXCL

Clip Lock Design

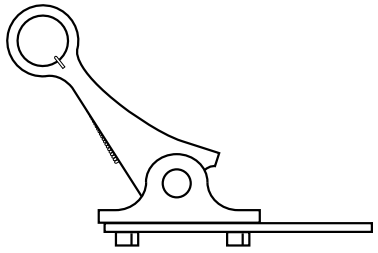

Mounting Details for Clip Lock

CATALOG NUMBER	DIMENSION A (INCHES)
10E1CL5.5 thru 150E1CL5.5	12.88
225E2CL5.5 thru 600E3CL5.5	13.88
10E1CL8.25 thru 350E3CL8.25	13.88
10E1CL15.5 thru 50E1CL15.5	16.25
65E1CL15.5 thru 300E3CL15.5	19.25

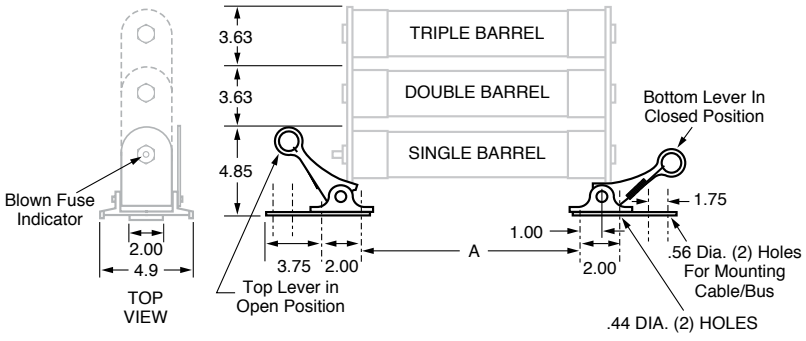

Dimensions for reference only.

Section Overview

Rely on Littelfuse for short circuit protection of telecommunications circuits and sensitive DC power distribution circuits.







TELECOM PRODUCTS

Table of Contents

L17T Series Telecommunications Power Fuse 71

TLN Series Telecommunications Power Fuse 72

TLS Series Telecommunications Power Fuse 73

Alarm-Indicating Fuses 76

LTFD101 Telecommunication Disconnect Switch 77

© 2023 Littelfuse, Inc.

L17T SERIES TELECOM POWER FUSE

170 V dc • Current-Limiting • 70–1200 A



Description

Specifically designed for short-circuit protection of telecommunications circuits, the Littelfuse L17T series fuses provide reliable protection of sensitive DC power distribution systems. Constructed with silver plated elements for low I^2t and peak let-through, these advanced fuses virtually eliminate equipment damage due to surges and spikes. The L17T series fuse unique element geometry also provides cooler running temperatures, helping to minimize heat within enclosures.

Features

- Low I^2t
- Extremely current-limiting
- Low operating temperature
- 170 Vdc rating

Specifications

Voltage Rating	170 Vdc
Interrupting Rating	100 kA
Ampere Range	70 – 1200 A
Approvals	UL Recognized (File: E71611) CSA Recognized (File: LR29862)

Ordering Information

AMPERE RATINGS						
70	125	200	300	450	800	1100
90	150	225	350	500	900	1200
100	175	250	400	600	1000	—

SERIES	VOLTAGE	AMPERAGE	CATALOG NUMBER	ORDERING NUMBER
L17T	170	1200	L17T 1200	L17T1200V

Dimensions Inches (mm)

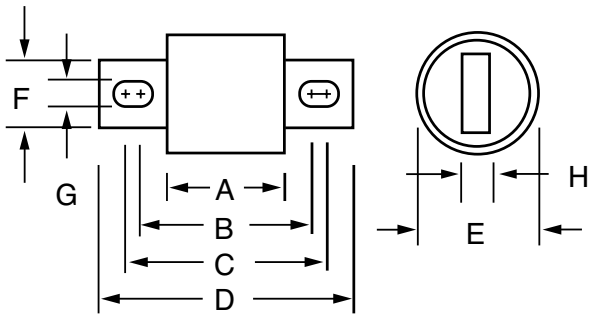

AMPERE RATING	DIMENSIONS INCHES (mm)							
	A	B	C	D	E	F	G	H
70–250	1 5/32 (29.4)	1 7/8 (47.6)	2 3/16 (55.6)	2 21/32 (67.5)	1 (25.4)	7/8 (22.2)	0.327 (8.3)	3/16 (4.8)
300–800	1 1/4 (31.8)	1 15/16 (49.2)	2 9/16 (65.1)	3 1/2 (88.9)	1 1/2 (38.1)	1 (25.4)	13/32 (10.3)	1/4 (6.35)
900–1200	1 11/32 (34.0)	—	—	4 1/16 (103.1)	2 (50.8)	1 1/2 (38.1)	—	1/4 (6.35)

Web Resources

For additional information, visit:
Littelfuse.com/l17t

TLN SERIES TELECOM POWER FUSE

170 Vdc • Current-Limiting • 1–600 A



Specifications

Voltage Rating	170 Vdc
Interrupting Rating	100 kA
Ampere Range	1– 600 A
Approvals	UL Recognized (File: E71611)

Ordering Information

AMPERE RATINGS						
1	15	40	80	150	300	600
3	20	45	90	175	350	—
5	25	50	100	200	400	—
6	30	60	110	225	450	—
10	35	70	125	250	500	—

SERIES	VOLTAGE	AMP	CATALOG NUMBER	ORDERING NUMBER
TLN	170VDC	6	TLN006	0TLN006.T

Replaces competitors' TPN and TGN Series.

Description

The TLN Series fuses are specifically designed for the protection of telecommunications DC power distribution circuits.

Features

- 170 Vdc rating
- Fast-acting and current-limiting
- 1 to 600 amperes rating
- Dimensionally similar to 250 V Class R fuses

Web Resources

For additional information, visit:
Littelfuse.com/tln

Recommended Fuse Holders

LFR25 Series 94

Dimensions Inches (mm)

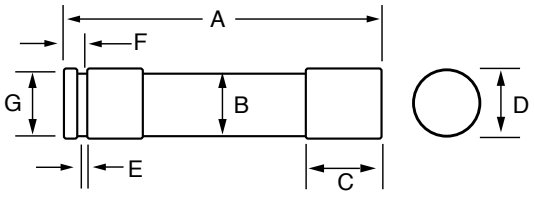

FIG. 1

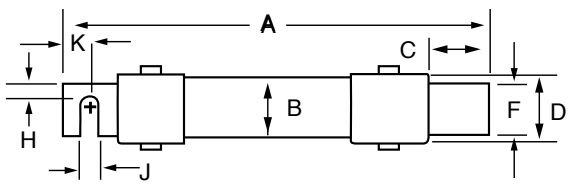

FIG. 2

AMPERES	FIGURE NUMBER	DIMENSIONS INCHES (mm)									
		A	B	C	D	E	F	G	H	J	K
1 – 30	1	2 (50.8)	½ (12.7)	½ (12.7)	9/16 (14.3)	5/64 (2.0)	5/32 (4.0)	3/8 (9.5)	—	—	—
35 – 60	1	3 (76.2)	¾ (19.1)	5/8 (15.9)	13/16 (20.6)	3/32 (2.4)	3/16 (4.8)	5/8 (15.9)	—	—	—
70 – 100	2	5 7/8 (149.2)	1 (25.4)	1 1/16 (27.0)	1 1/16 (27.0)	1/8 (3.2)	¾ (19.1)	1¼ (31.6)	¼ (6.4)	9/32 (7.1)	½ (12.7)
110 – 200	2	7 1/8 (181.0)	1½ (38.1)	1 15/32 (37.3)	1 19/32 (40.5)	3/16 (4.8)	1⅛ (28.6)	1 27/32 (46.8)	7/16 (11.1)	9/32 (7.1)	11/16 (17.5)
225 – 400	2	8 5/8 (219.1)	2 (50.8)	1 15/16 (49.2)	2 3/32 (53.2)	¼ (6.4)	1 5/8 (41.3)	2 11/32 (59.5)	5/8 (15.9)	13/32 (10.3)	15/16 (23.8)
450 – 600	2	10 3/8 (263.5)	2½ (63.5)	2 3/8 (60.3)	2 19/32 (65.9)	¼ (6.4)	2 (50.8)	2 27/32 (72.2)	¾ (19.1)	17/32 (13.5)	1⅛ (28.6)

© 2023 Littelfuse, Inc.

TLS SERIES TELECOM POWER FUSE

170 V dc • Current-Limiting • 1–125 A



Description

Littelfuse TLS series fuses are designed specifically for the protection of telecommunications equipment. TLS fuses have been engineered to operate up to 170 V dc to provide current-limiting short-circuit protection for cables and components found in the dc power distribution circuits of telecommunications systems. The compact design and multiple mounting configurations of the TLS series allow it to be used in a variety of applications.

Features

- 170 V dc rating
- Current-limiting
- 1–125 amperes rating
- Multiple mounting configurations — cartridge, vertical, leaded, bolt-in, or solder type. See dimensions on the following pages for mounting style details.
- RoHS Compliant

Applications

- Telecommunication equipment protection
- Short-circuit current protection

Recommended Fuse Holders

- LFTD series disconnect switches
- LFT30060 for TLS series cartridge style fuse

Contact factory for more information.

Web Resources

For additional information, visit: **Littelfuse.com/tls**

Specifications

Voltage Rating	170 V dc
Ampere Range	1–125 amperes
Interrupting Rating	100 kA
Approvals	UL Recognized (File: E71611) TUV (70 kA IR)
Material	Body: glass melamine Caps: silver-plated brass
Environmental	RoHS Compliant, lead (Pb) free
Applicable Standards	UL 248-1 IEC-60269-4

Ordering Information

AMPERE RATINGS				
1	6	25	50	90
2	10	30	60	100
3	15	35	70	110*
5	20	40	80	125*

*Available in standard cartridge, LSE solder, and LR bolt-in.

Part Numbering System

0TLS xxx T –

Series

Amp Code

Package Quantity
T = 10
S = 20 (only LSA)

Mounting Options
Blank = Cartridge
XV = Vertical
XL = Leaded
XLB = Bolt-In
XLS = Solder
XMB = Solder (Mid-Board Mount)
XLSE = Solder†
XLR = Bolt-In†
LSA = Solder

SERIES	AMPERE	MOUNTING METHOD	MOUNTING SUFFIX	CATALOG NUMBER	ORDERING NUMBER	FUSE LABEL ID
TLS	6	Cartridge	–	TLS006	0TLS006.T	TLS 6A
TLS	15	Vertical	V	TLS015V	0TLS015.TXV	TLS 15A-V
TLS	35	Leaded	L	TLS035L	0TLS035.TXL	TLS 35A-L
TLS	50	Bolt-In	LB	TLS050LB	0TLS050.TXLB	TLS 50A-LB
TLS	80	Solder	LS	TLS080LS	0TLS080.TXLS	TLS 80A-LS
TLS	100	Solder	MB	TLS100MB	0TLS100.TXMB	TLS 100A-MB
TLS	125	Solder	LSE	TLS125LSE	0TLS125.TXLSE	TLS 125A-LSE
TLS	125	Bolt-In	LR	TLS125LR	0TLS125.TXLR	TLS 125A-LR
TLS	30	Solder	LSA	TLS030LSA	0TLS030.SLSA	TLS 30A-LSA

†Option is available for 35 to 125 amperage only

TLS SERIES TELECOM POWER FUSE

Dimensions

Millimeters [inches]

Ferrule Version - TLS

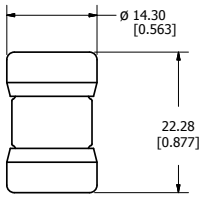

Solder Mount - LS Version

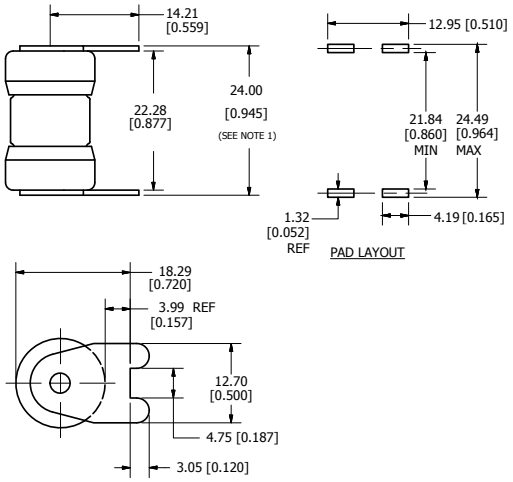

NOTE:
1. MEASUREMENT TAKEN AT END OF TERMINALS.

Solder Mount - LSE Version

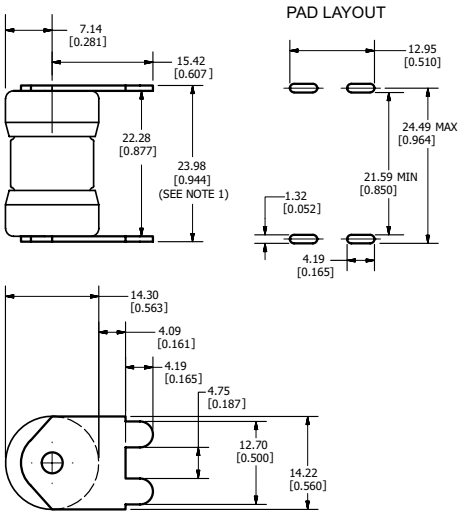

NOTE 1: Measurement taken at end of terminals.

Solder Mount - L Version

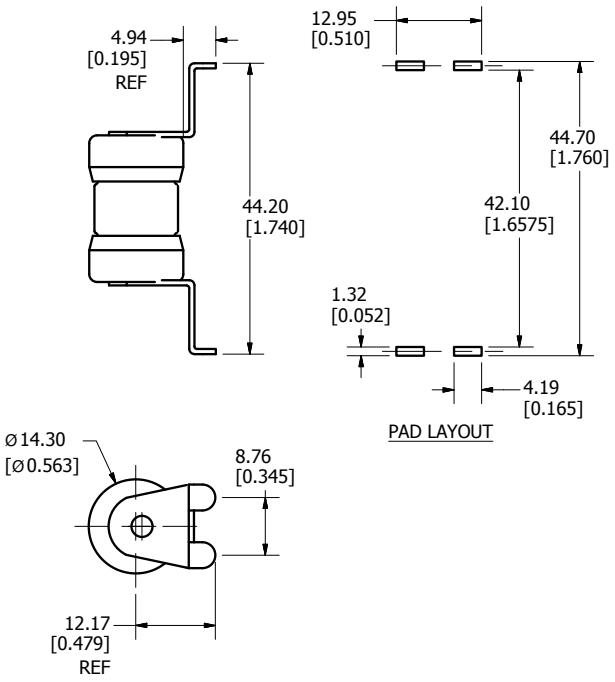

Solder Mount - LSA Version

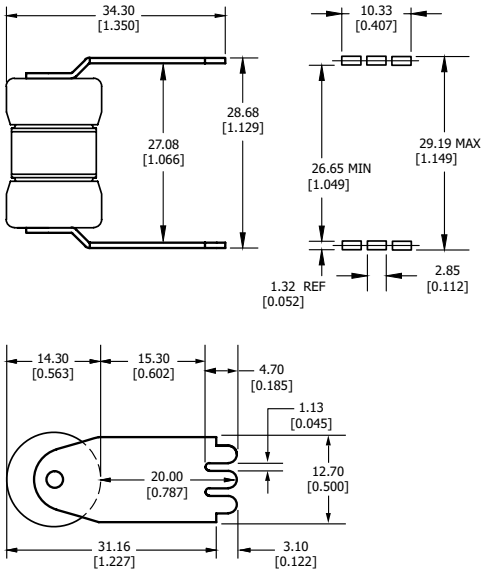

 © 2023 Littelfuse, Inc.

TLS SERIES TELECOM POWER FUSE

Dimensions

Millimeters [inches]

Solder Mount - V Version

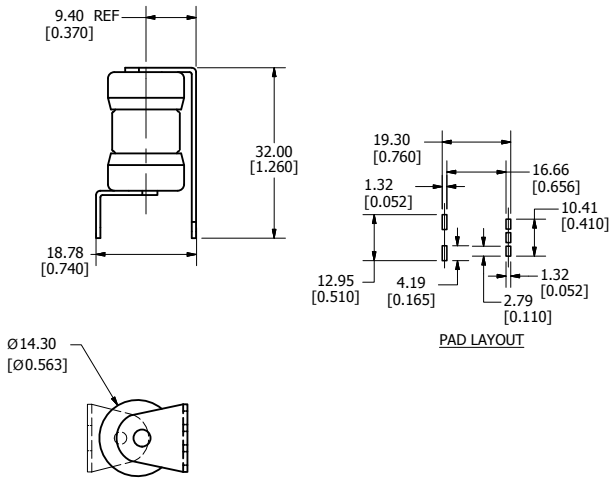

Solder Mount - MB Version

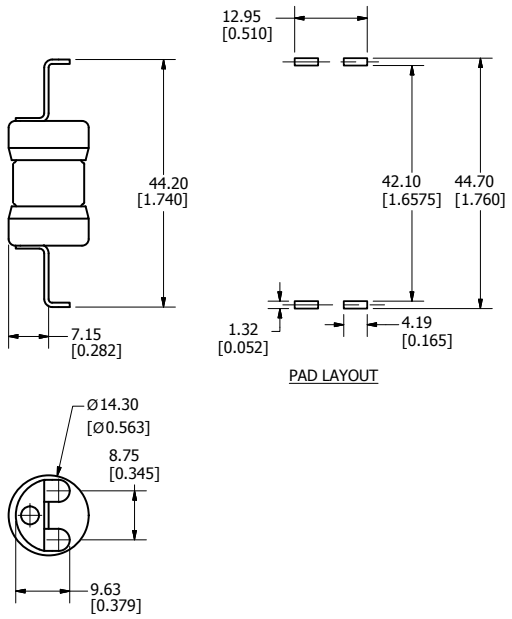

Bolt-In Mount - LR Version

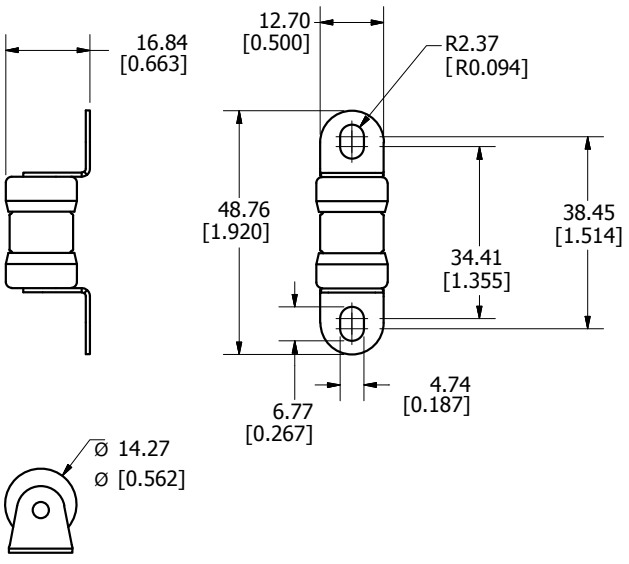

Bolt-In Mount - LB Version

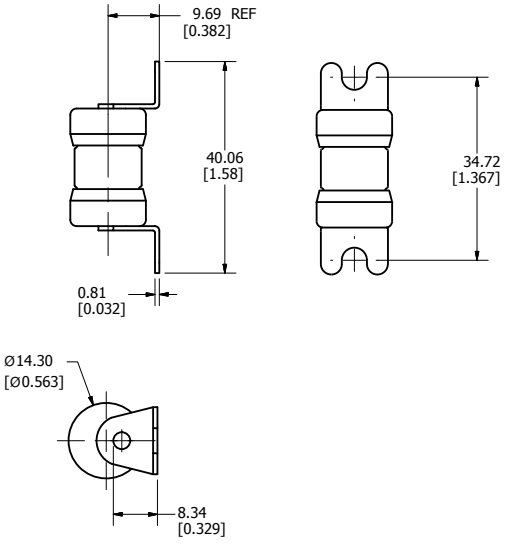

NOTES:

RECOMMENDED HARDWARE: #8 SLOTTED HEX WASHER HEAD MACHINE SCREW

TORQUE: 10 IN-LB

481 SERIES ALARM INDICATING FUSES

Alarm Indicating Fuses



481 Series Alarm Indicating Fuses

Description

481 Series alarm indicating fuses are designed to reduce down time by immediately pinpointing the blown (open) circuit while triggering an LED or audio alarm. This item requires 482 Series mating fuse holder.

All ranges of 481 Series fuses are available as our original design, and the 2-20 amp range is now available as a RoHS compliant option (use the "P" designator when ordering). See the part numbering section of the datasheet for related ordering instructions.

Specifications

Voltage Rating	125 Vac/dc
Approvals	UL Recognized (File: E71611)
	CSA Recognized (File: LR29862)

Ordering Information

AMPERE RATINGS						
18/100	3/8	3/4	1 1/2	3	5	12
1/5	1/2	1	2	3 1/2	7 1/2	15
1/4	65/100	1 1/3	2 1/2	4	10	20

SERIES	VOLTAGE	AMP	CATALOG NUMBER	ORDERING NUMBER
481	125 ac/dc	2	481002L	0481002.VXL

Note: For 481 Dummy fuse, order 481000.

Recommended Fuse Holders

482 Series, see website: **Littelfuse.com/482**
Available 1-20 pole with PCB or panel mounting.
To order with protective lens add suffix XL.

Web Resources

For additional information, visit: **Littelfuse.com/481**

© 2023 Littelfuse, Inc.

LTFD 101 SERIES TELECOM DISCONNECT SWITCH

80 Vdc • 1-125 A



Description

Littelfuse compact LTFD 101 fuse holders for TLS fuses are designed for quick installation into telecom equipment panels. Their modular design fits into spaces originally designed for circuit breakers and can be front panel mounted or rear mounted using bullet connectors. The innovative new pull-out design eliminates the need for tools to replace fuses and includes an alarm signaling circuit to identify the blown fuse.

Features

- Extremely compact
- Quick mounting
- Replaces circuit breakers
- Includes alarm signaling circuit

Specifications

Voltage Rating	80 Vdc
Ampere Range	1 – 125 A
Approvals	UL Recognized (File: E122674)

Recommended Fuses

Littelfuse TLS Series fuses 52

Ordering Information

SERIES	AMPERAGE	CATALOG NUMBER	ORDERING NUMBER	TERMINAL TYPE
LTFD	125 A MAX	LTFD101-1	LTFD0101ZX1	BULLET
LTFD	125 A MAX	LTFD101-2	LTFD0101ZX2	SCREW
LTFD	125 A MAX	LTFD101-3	LTFD0101ZX3	STUD
LTFD	70 A MAX	LTFD101-4	LTFD0101ZX4	CLIP

Web Resources

For additional information, visit:
Littelfuse.com/ltfd101

Dimensions Inches (mm)

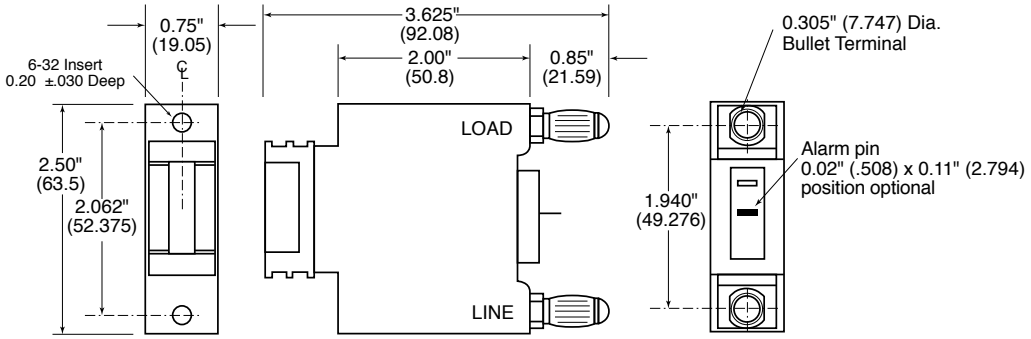

Dimensions for reference only. For additional options and dimensions, contact the factory.

© 2023 Littelfuse, Inc.

Section Overview

Whether you are protecting solar equipment or finding a replacement fuse for an aging HVAC unit, Littelfuse carries the breadth of fuses to meet your needs. Our "special purpose" fuse section includes application-specific products to meet all of your application needs.







SPECIAL PURPOSE FUSES

Table of Contents

Special Purpose Products Overview 78

1500 V dc Solar Rated Fuses 79

1000 V dc Solar Rated Fuses 89

Forklift / Stud Mounted Fuses 92

Plug Fuses 93

MEGA® Bolt-Down Fuses 93

In-Line Fuses and Holder 94

Cable Limiters 95

Cylindrical Fuses 96

OEM Custom Products 97

High-Speed Fuses 98



Solar Circuit Protection

Littelfuse engineering is constantly developing new products to meet the needs of the photovoltaic industry. For the latest information on the growing solar product portfolio, visit: **Littelfuse.com/solar**

© 2023 Littelfuse, Inc.

SPXV SERIES STRING SOLAR FUSE

1500 V dc • 1–60 A



Description

The Littelfuse SPXV solar string fuse has been specifically designed for the protection of photovoltaic (PV) systems.

It is available in multiple ampere ratings to match various requirements in a range of applications.

Features/Benefits

- Offers higher amperage protection in less space for increased design flexibility
- Full range, fast-acting fuse helps eliminate common low-overload faults
- Up to 50,000 A interrupting rating

Applications

- Inverters
- Combiner boxes

Recommended Accessories

1–32 Amperes
Fuse Holder: LFPXV001
Fuse Clips: 125003

35–60 Amperes
Fuse Block and Cover: LFXV15060-BC

Web Resources

Download technical resources at: **Littelfuse.com/SPXV**

Specifications

Voltage Rating	1500 V dc
Amperage Rating	1, 2, 2.25, 2.5, 3, 3.5, 4, 4.5, 5, 6, 8, 10, 12, 15, 16, 20, 25, 30, 32, 35, 40, 45, 50, 55, 60 A
Interrupting Rating	SPXV 1 A–20 A: 30 kA (50 kA Self-Certified) SPXV 35 A–60 A: 50 kA SPXV-M 25 A–32 A: 50 kA
Time Constant	≤ 1ms
Material	Body: melamine Caps: copper alloy (nickel plated)
Approvals	cULus (File: E339112) TUV (Cert: J 50506219)
Applicable Standards	UL 248-1, 248-19 IEC 60269-6
Environmental	RoHS Compliant REACH
Country of Origin	Mexico

Part Numbering System

SPXV xxx T –

Series

Ampere Code
Refer to Ampere Code Column in Ordering Information Table

Options
Blank = 1–20 A 10 x 85 mm
35–60 A 20 x 127 mm
XM = 25–32 A 10 x 85 mm

Package Quantity
T = 10
L = 50

SERIES	AMPERAGE	PACKAGE QUANTITY	CATALOG NUMBER	ORDERING NUMBER
SPXV	6	10	SPXV006	SPXV006.T
SPXV	20	50	SPXV020	SPXV020.L
SPXV	32	10	SPXV032-M	SPXV032.TXM
SPXV	60	10	SPXV060	SPXV060.T

© 2023 Littelfuse, Inc.

SPXV SERIES IN-LINE SOLAR FUSE

SPXV Dimensions mm (in)

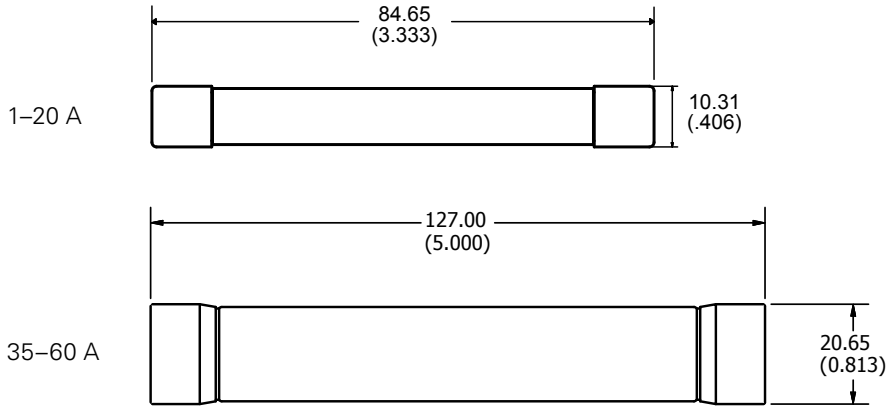

SPXV-M Dimensions mm (in)

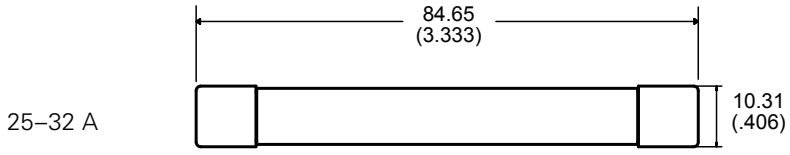

© 2023 Littelfuse, Inc.

SPXI SERIES IN-LINE SOLAR FUSES

1500 V dc • 1–60 A



Description

The Littelfuse SPXI solar fuse is specifically designed for the protection of photovoltaic (PV) systems. It integrates into an in-line assembly within a wire harness and can be electrically insulted by either overmolding or using heat-shrink.

Littelfuse offers multiple ampere ratings to match specific requirements in a variety of applications.

Features/Benefits

- Offers higher amperage protection in less space for increased design flexibility
- One-piece cap design, without joints, offers easier wire crimping and more streamlined molding
- No fuse holder required helps save space, time, and money
- 50,000 A interrupting rating

Applications

- Photovoltaic high-capacity homerun, trunk harness, and wire harness

Recommended Crimping Tool

10-12 AWG: T&B Sta-Kon ERG4002
8 AWG: T&B Sta-Kon ERG4
6 AWG: Burndy MRC840AL

Specifications

Voltage Rating	1500 V dc
Amperage Rating	1, 2, 2.25, 2.5, 3, 3.5, 4, 4.5, 5, 6, 8, 10, 12, 15, 16, 20, 25, 30, 32, 35, 40, 45, 50, 55, 60 A
Interrupting Ratings	SPXI 1–20 A and SPXI-B 1–20 A: 30 kA SPXI 35–50 A and SPXI-B 35–60 A: 50 kA SPXI-M and SPXI-BM 25–32A: 50 kA
Time Constant	≤ 1ms
Material	Body: melamine Caps: copper alloy (nickel plated)
Approvals	UL Recognized (File: E339112) TUV (Cert: J 50495785)
Applicable Standards	UL 248-1, 248-19 IEC 60269-6 (electrically only)
Environmental	RoHS Compliant REACH
Country of Origin	Mexico
US Patent	9,564,281

Part Numbering System

SPXI xxx T XB

Series

Ampere Code
Refer to Ampere Code Column in Ordering Information Table

Options
Refer to Ordering Number column in Ordering Information table

Package Quantity
T = 10
L = 50

Web Resources

Download additional technical information and view the complete solar portfolio: **Littelfuse.com/spxi**

© 2023 Littelfuse, Inc.

SPXI SERIES IN-LINE SOLAR FUSES

Dimensions

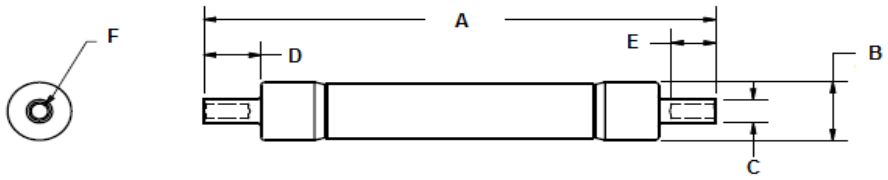

SERIES	AMPS	DIMENSIONS IN MM (INCHES)						WIRE RANGE
		A	B	C	D	E	F	
SPXI	2.5–4	81.41 (3.205)	10.31 (0.406)	5.59 (0.22)	12.26 (0.483)	9.53 (0.375)	3.56 (0.14)	10-12 AWG (6-4 mm²)
	4.5–20	110.06 (4.333)	10.31 (0.406)	5.59 (0.22)	12.26 (0.483)	9.53 (0.375)	3.56 (0.014)	10-12 AWG (6-4 mm²)
	35–50	158.04 (6.222)	20.65 (0.813)	6.7 (0.264)	14.25 (0.561)	10.25 (0.404)	4.7 (0.185)	8 AWG (10mm²)
SPXI-B	2.5–4	85.4 (3.362)	10.31 (0.406)	6.7 (0.264)	14.25 (0.561)	10.25 (0.404)	4.7 (0.185)	8 AWG (10mm²)
	4.5–20	114.05 (4.49)	10.31 (0.406)	6.7 (0.264)	14.25 (0.561)	10.25 (0.404)	4.7 (0.185)	8 AWG (10mm²)
	35–60	163.58 (6.44)	20.65 (0.813)	8.5 (0.335)	17.02 (0.67)	13.72 (0.54)	5.5 (0.217)	6 AWG
SPXI-M	25–32	110.06 (4.333)	10.31 (0.406)	5.59 (0.22)	12.26 (0.483)	9.53 (0.375)	3.56 (0.014)	10-12 AWG (6-4 mm²)
SPXI-BM	25–32	114.05 (4.49)	10.31 (0.406)	6.7 (0.264)	14.25 (0.561)	10.25 (0.404)	4.7 (0.185)	8 AWG (10mm²)

© 2023 Littelfuse, Inc.

SPNH SERIES SOLAR FUSE

1500 V dc • 50–400 A • NH Style



Specifications

Voltage Rating	1500 V dc
Amperage Rating	50, 63, 80, 100, 125, 160, 200, 250, 315, 350, 400 A
Interrupting Rating	30 kA, 50 kA
Time Constant	≤ 2 ms
Material	Body: ceramic End Bells: copper alloy
Approvals	UL 248-19 Listed (File: E339112)
Applicable Standards	UL 248-1, 248-19 IEC 60269-6
Environmental	RoHS Compliant

Part Numbering System

SPNH XXX .X X DL

Series

Amp Code
Refer to Amp Code Column in Ordering Information table

Package Quantity
X = 1

Case Size*
X = 1XL size
2XL = 2XL size
3L = 3L size

Termination*
Blank = solid blade w/Microswitch tab
DL = S blade
DE = U blade
DLMS = S blade w/Microswitch tab
DEMS = U blade w/Microswitch tab

Description

The SPNH series has been designed to meet the emerging circuit protection needs for 1500 volt photovoltaic systems. These fuses provide full range protection for all potential overcurrent conditions that exist in PV applications. Suitable for PV inverter protection and array combiner applications.

Features/Benefits

- Compact NH XL sizes
- Low watt loss design
- 1500 V dc rating for high efficiency designs
- Designed to protect against a full range of overcurrents

Applications

- Inverters
- Re-combiner boxes
- Array/Re-combiner application
- PV Inverter dc input protection

Web Resources

- Download technical documents: **Littelfuse.com/spnh**

SERIES	AMP	PACKAGE QUANTITY	CATALOG NUMBER	ORDERING NUMBER
SPNH	50	1	SPNH050	SPNH050.X
SPNH	200	1	SPNH200	SPNH200.X
SPNH	400	1	SPNH400	SPNH400.XXDLMS

*Solid blade option for 1XL case size does not require a case or termination designator for the part number.

Recommended Accessories

1XL Case Size
Fuse Holder: LFNH152001CST
Fuse Terminial Covers: LFNH15200FBC

2XL Case Size
Fuse Holder: LFNH154001CST
Fuse Terminial Covers: LFNH15400FBC

3L Case Size
Fuse Holder: LFNH156301CST
Fuse Terminial Covers: LFNH15630FBC

Microswitch
MSSPNH1500X



Look for this logo to indicate products that are used in solar applications. Visit our website **Littelfuse.com/solar** for the latest updates on approvals, certifications, and new products.

© 2023 Littelfuse, Inc.

SPNH SERIES SOLAR FUSE

Dimensions Millimeters (in)

Size: 1 XL w/ Microswitch Tab

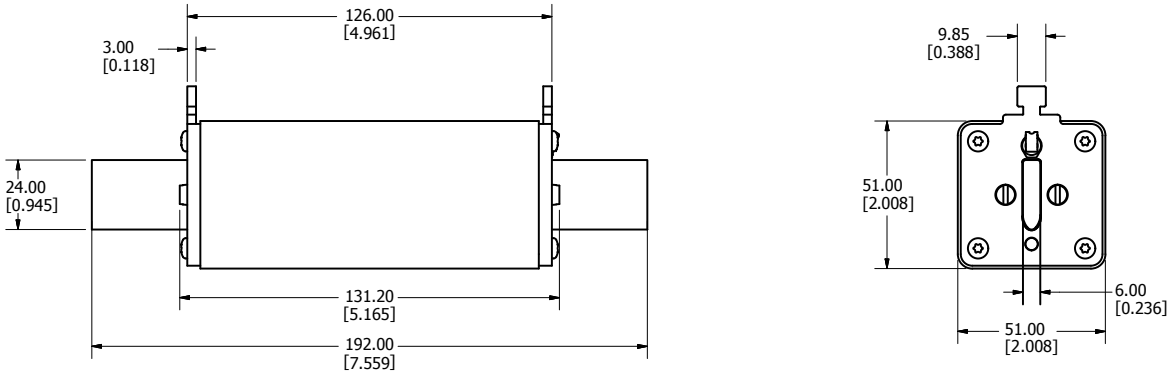

Size: 2 XL w/ Microswitch Tab

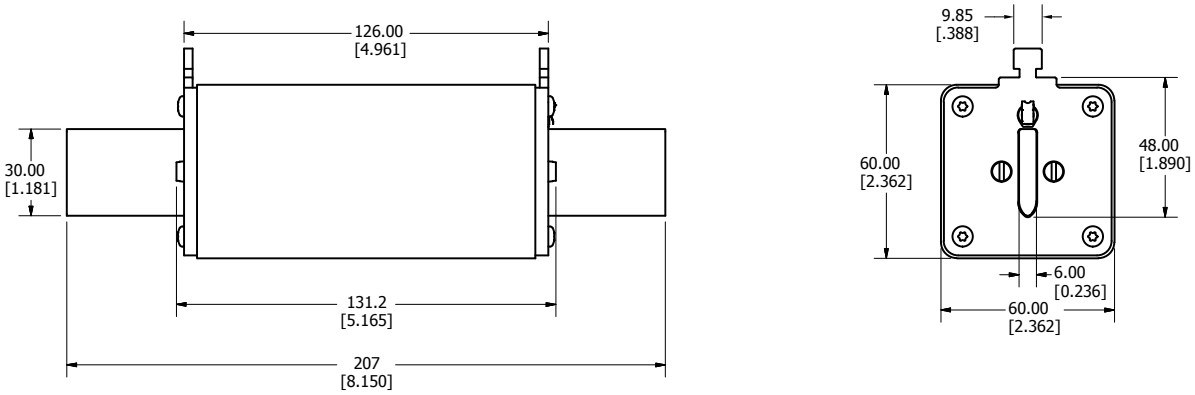

Size: 3 L w/ Microswitch Tab

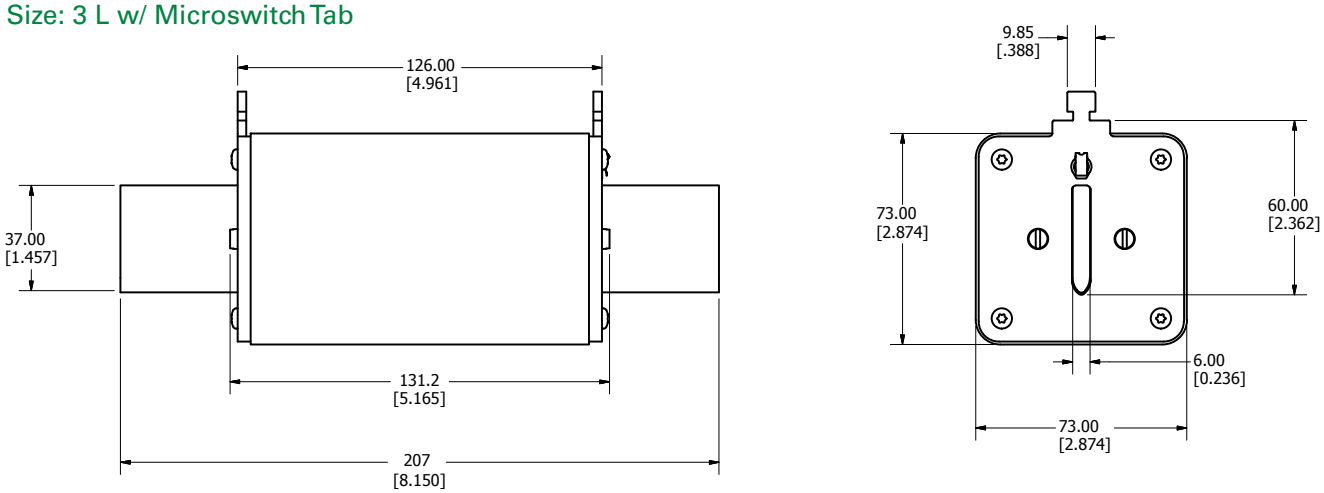

© 2023 Littelfuse, Inc.

SPNH SERIES SOLAR FUSE

Dimensions Millimeters (in)

Size: 1XL DE Blade

Recommended Torque: 44 Nm*

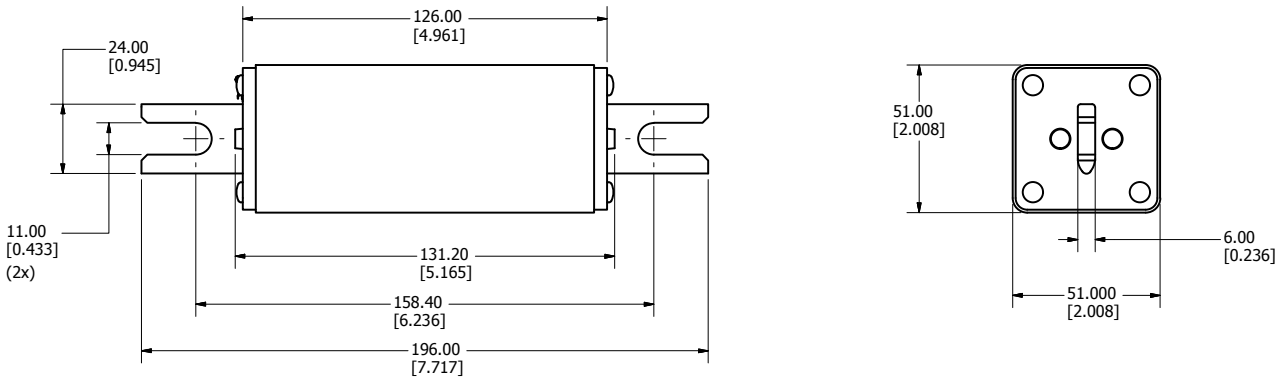

Size: 1XL DL Blade

Recommended Torque: 44 Nm*

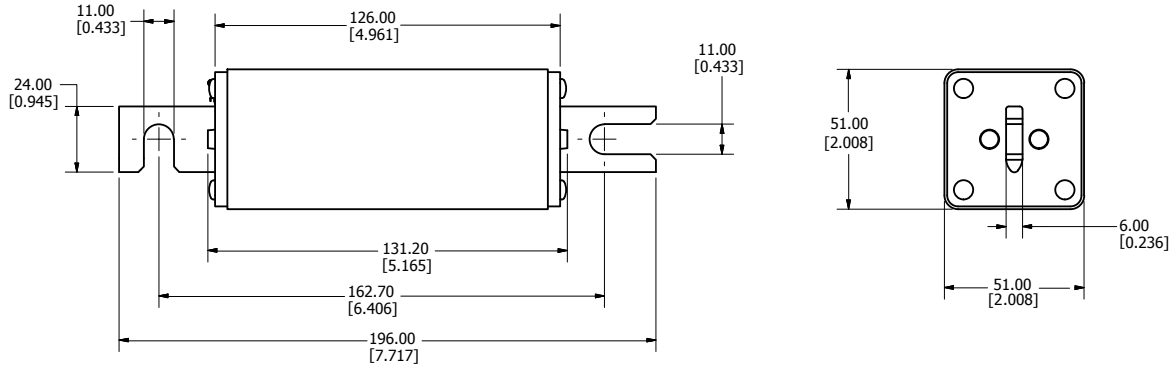

Size: 2 XL DE Blade

Recommended Torque: 77 Nm*

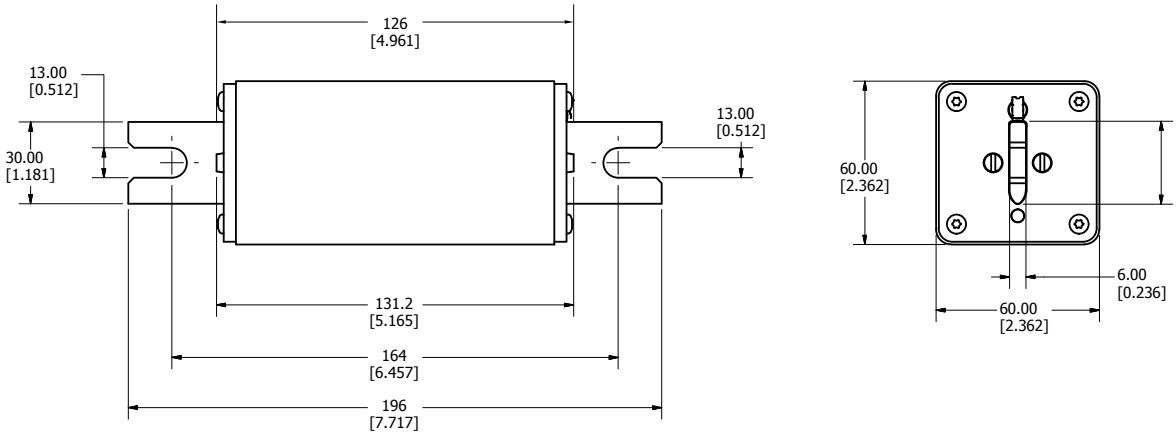

*recommended torque values are for grade 8 steel hardware

SPNH SERIES SOLAR FUSE

Dimensions Millimeters (in)

Size: 2 XL DL Blade

Recommended Torque: 44 Nm*

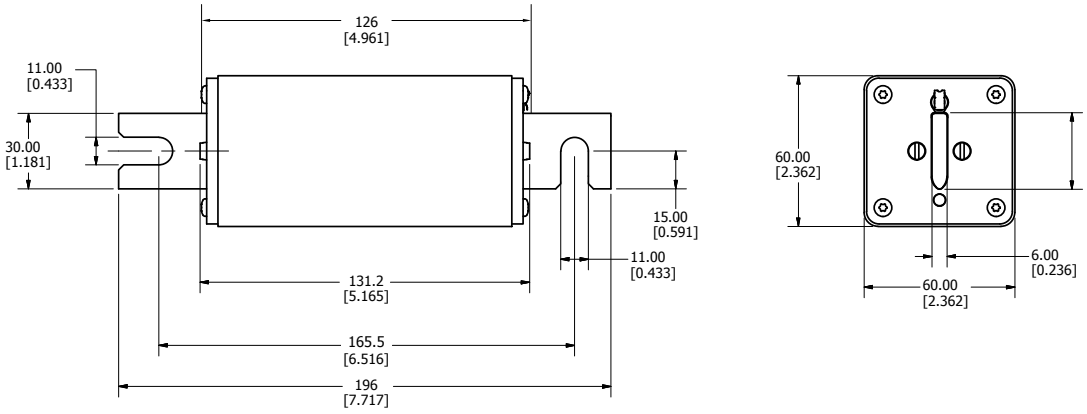

Size: 3 L DE Blade

Recommended Torque: 77 Nm*

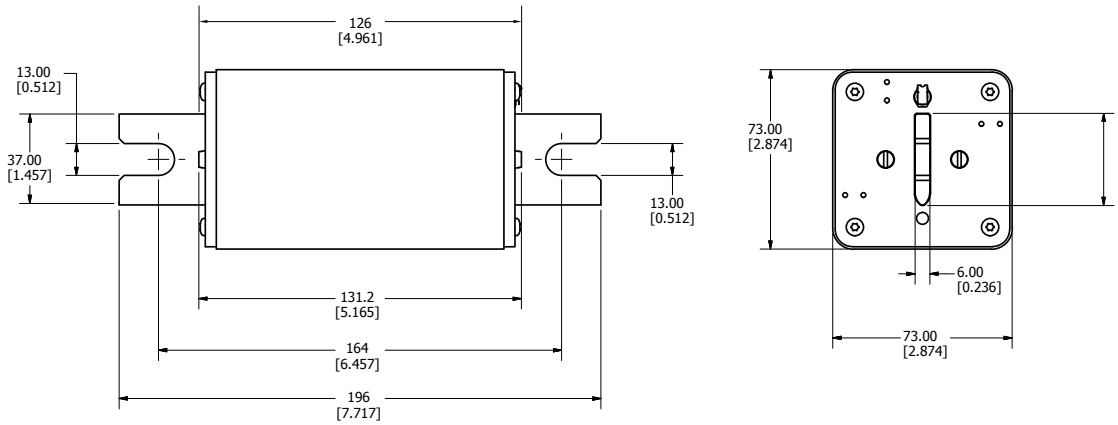

Size: 3 L DL Blade

Recommended Torque: 44 Nm*

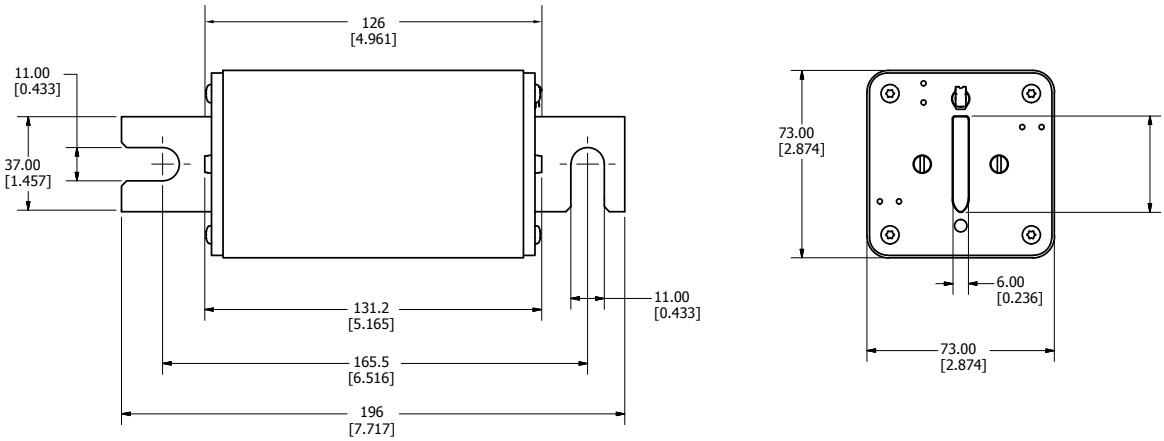

*recommended torque values are for grade 8 steel hardware

© 2023 Littelfuse, Inc.

SPNH SERIES SOLAR FUSE

Dimensions Millimeters (in)

Size: 1 XL DL Blade w/ Microswitch Tab

Recommended Torque: 44 Nm*

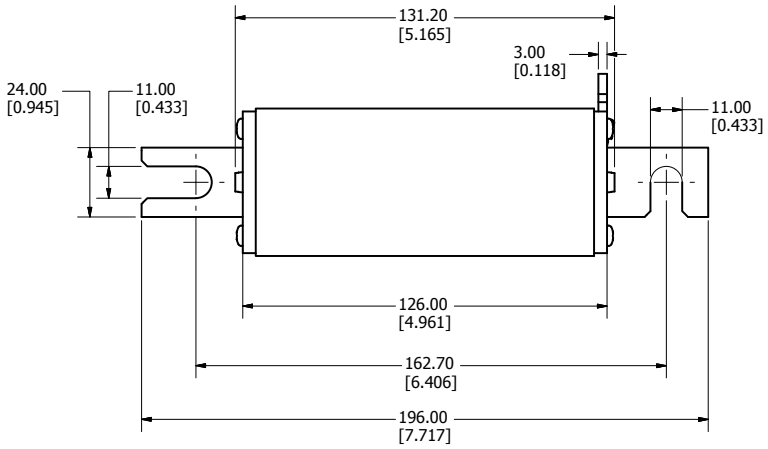

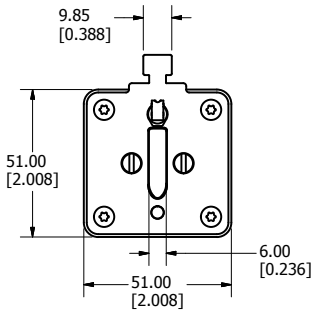

Size: 1 XL DE Blade w/ Microswitch Tab

Recommended Torque: 44 Nm*

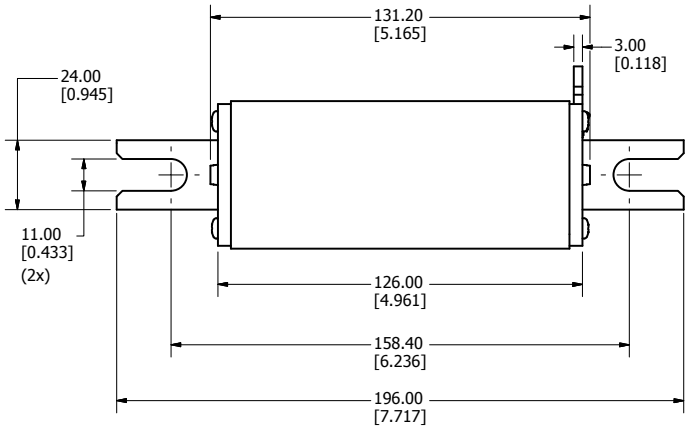

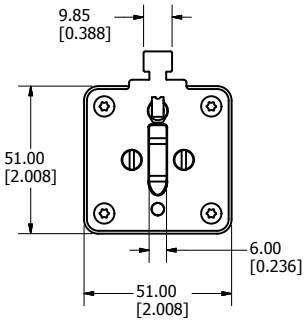

Size: 2 XL DL Blade w/ Microswitch Tab

Recommended Torque: 44 Nm*

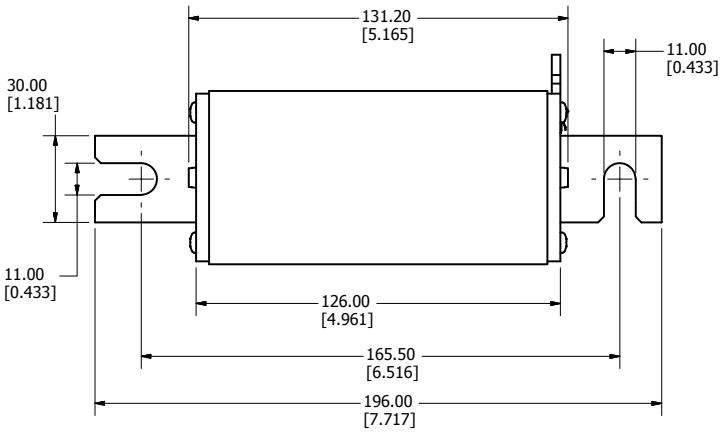

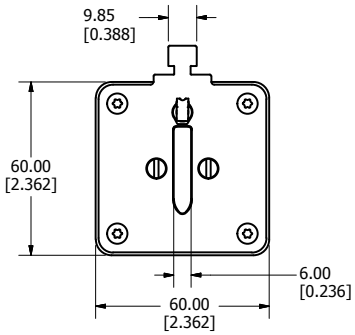

*recommended torque values are for grade 8 steel hardware

SPNH SERIES SOLAR FUSE

Dimensions Millimeters (in)

Size: 2 XL DE Blade w/ Microswitch Tab

Recommended Torque: 77 Nm*

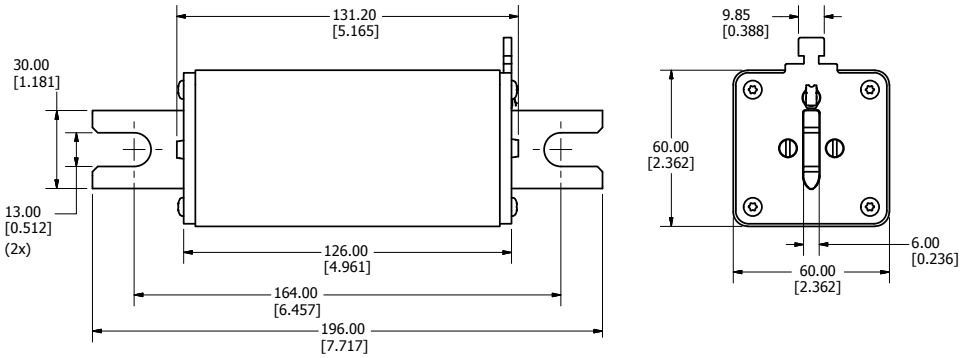

Size: 3 L DL Blade w/ Microswitch Tab

Recommended Torque: 44 Nm*

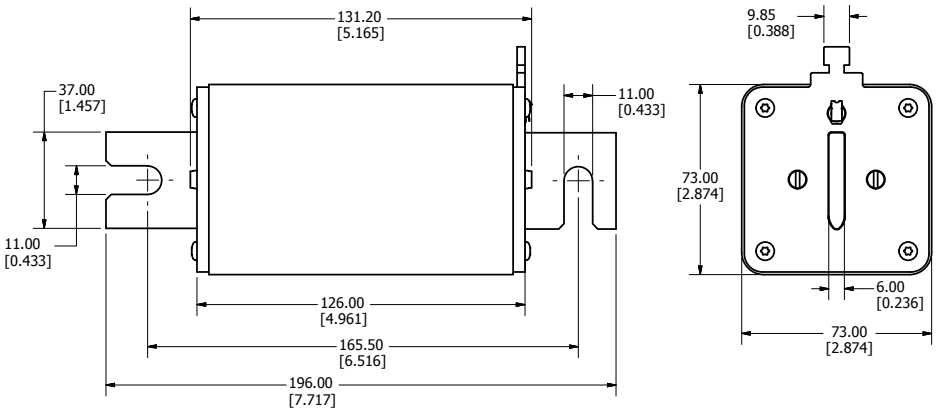

Size: 3 L DE Blade w/ Microswitch Tab

Recommended Torque: 77 Nm*

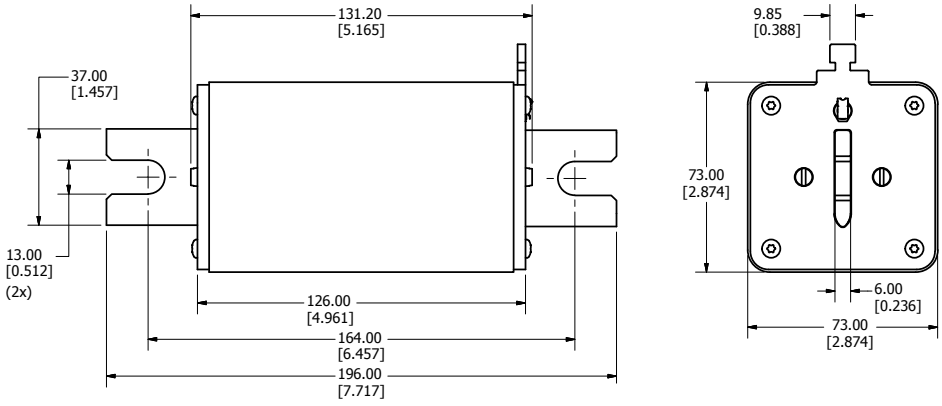

*recommended torque values are for grade 8 steel hardware

Microswitch

MSSPNH1500X

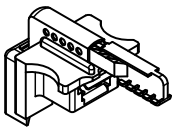

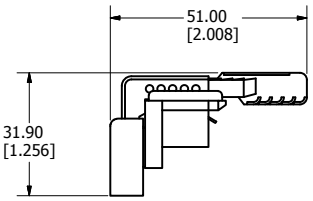

© 2023 Littelfuse, Inc.

SPFI SERIES IN-LINE SOLAR FUSE

1000 Vdc • 2-30 A



Description

The Littelfuse SPFI solar fuse is designed to integrate into an in-line assembly within a wire harness. It has been specifically engineered to protect photovoltaic (PV) systems meeting UL 248-19 standards. The SPFI can be electrically insulated by either overmolding or using heat-shrink.

For additional product information, contact Littelfuse Technical Support at 1-800-TEC-FUSE or techline@littelfuse.com.

Features/Benefits

- One-piece cap design, without joints, offers easier wire crimping and more streamlined molding
- No fuse holder required helps save space, time, and money
- 20,000 A Interrupting Rating

Applications

- Photovoltaic wire harness

Dimensions mm (in)

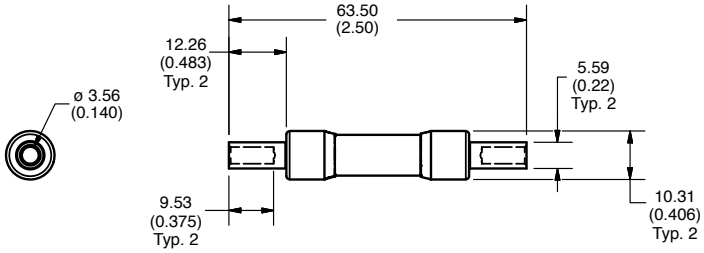

Specifications

Voltage Rating	1000 V dc
Amperage Rating	2, 2.5, 3, 3.5, 4, 5, 6, 8, 10, 12, 15, 20, 25, 30 A
Interrupting Rating	20 kA
Time Constant	≤ 1ms
Material	Body: Melamine Caps: Copper Alloy (Nickel Plated)
Approvals	UL 248-19 Recognized (File: E339112) TUV (Cert: J 50505290)
Applicable Standards	UL 248-1, 248-19 IEC 60269-6 (electrically only)
Environmental	RoHS Compliant REACH
Country of Origin	Mexico
US Patent	9,564,281

Part Numbering System

SPFI xxx T

Series

Amp Code
Refer to Amp Code Column in Ordering Information Table

Package Quantity
T = 10
L = 50

Web Resources

Downloadable CAD drawings and other technical information: **littelfuse.com/SPFI**

Recommended Crimping Tool

T&B Sta-Kon ERG4002

SPF SERIES SOLAR FUSES

1000 V dc • 1—30 A



Description

The SPF Solar Protection Fuse series has been specifically designed for the protection of photovoltaic (PV) systems. This family of midget-style fuses (10 x 38 mm) can safely protect PV modules and conductors from reverse-overcurrent conditions.

As PV systems have grown in size, so have the corresponding voltage requirements. This increase in system voltage has typically been intended to minimize power loss associated with long conductor runs. Standard circuit protection devices are not designed to completely protect photovoltaic panels. However, the SPF series is UL Listed to safely interrupt faulted circuits up to this demanding voltage level.

Littelfuse offers multiple ampere ratings to match specific requirements in a variety of applications.

Features/Benefits

- Full range, fast-acting fuse helps eliminate common low-overload faults
- Prevents power generation losses due to nuisance tripping from changes in temperature
- Both PCB mount and dead-front holder options available

Applications

- Inverters
- Combiner boxes
- Battery charge controllers

Recommended Accessories

Fuse Holder: LPHV 1000 V dc POWR-Safe Series
Fuse Clips: 125003

Web Resources

Download technical documents: **Littelfuse.com/SPF**

Specifications

Voltage Rating	1000 V dc
Amperage Rating	1, 2, 3, 3.5, 4, 5, 6, 8, 10, 12, 15, 20, 25, 30
Max. Interrupting Rating	20 kA - 1 A - 20 A 50 kA - 25 A - 30 A
Time Constant	≤ 2ms
Material	Body: Melamine Caps: Copper Alloy
Approvals	UL Listed (File: E339112) CSA Certified (File: 029862_0_000) TUV (Cert: J 50494849)
Applicable Standards	UL 248-1, 248-19 IEC 60269-6
Environmental	RoHS Compliant
Country of Origin	Mexico

Part Numbering System

0SPF xxxx H XR

Series

Amp Code
Refer to Ordering Information table

Mounting Options
Blank = Ferrule
XR = PCB

Package Quantity
T = 10 Fuses
H = 100 Fuses

Dimensions Inches (mm)

Ferrule Version **PCB Version**

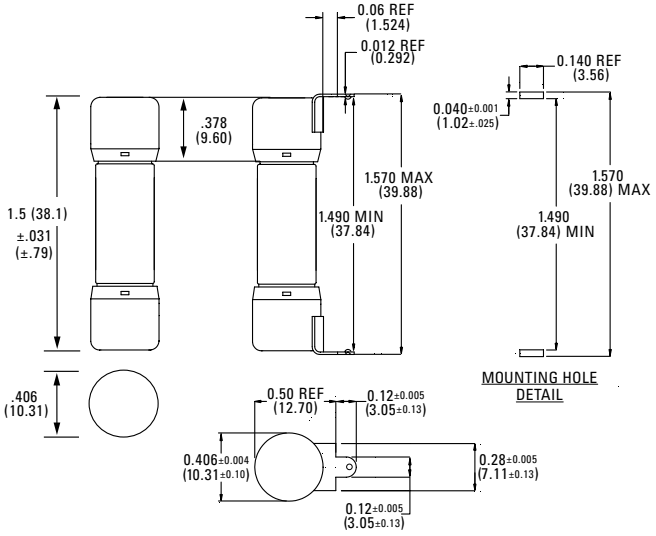

Look for this logo to indicate products that are used in solar applications. Visit our website **Littelfuse.com/solar** for the latest updates on approvals, certifications, and new products.

© 2023 Littelfuse, Inc.

SPFJ SERIES SOLAR FUSES

1000 V dc • 70–450 A • Full Range • Solar-Rated



Description

The SPFJ series is the smallest 1000 V dc 70–450 A dc full range fuse available in the market. The SPFJ series is manufactured in Class J case sizes and is suitable for photovoltaic, dc cable protection, EV off-board charging and other dc applications that allow for both fuse holder and busbar mounting configurations. The SPFJ meets both UL and IEC requirements.

Features & Benefits

- Higher amperage capacity in standard sizes for more protection in a smaller space
- Full range over-current protection capability, suitable for dc cable protection
- Small footprint offers design flexibility and reduces panel size requirements
- Fuse holder or bus bar mountings available for added versatility

Applications

- Inverters
- Re-combiner boxes
- Dc cable protection
- EV off-board (dc fast) chargers

Recommended Fuse Holder

LFJ1000 Solar Series

Web Resources

Download technical documents: **Littelfuse.com/SPFJ**

Specifications

Voltage Rating	1000 V dc 600 V ac (125–450 A)
Amperage Rating	70–450 A
Interrupting Rating	Ac: 200 kAIC (125–450 A) Dc: 70–200 A: 20 kAIC 250–400 A: 10 kAIC 450 A: 20 kAIC
Time Constant	≤ 1ms
Material	Body: Melamine End Bells: Copper Alloy
Approvals	cULus (File:E339112), VDE (Cert No. 40033659)**
Applicable Standards	UL 248-1, UL 248-8, UL 248-19, IEC 60269-6
Environmental	RoHS Compliant
Country of Origin	Mexico

Part Numbering System

SPFJ xxx X –

Series

Amp Code
Refer to Amp Code column in electrical specifications table

Mounting Options
Blank = Std. Class J dimensions
XL = 8.5 mm slot (125–200 A only)

Package Quantity
X = 1

SERIES	AMP	PACKAGE QUANTITY	CATALOG NUMBER	ORDERING NUMBER
SPFJ	70	1	SPFJ070	SPFJ070.X
SPFJ	200	1	SPFJ200	SPFJ200.XXL

Dimensions Inches (mm)

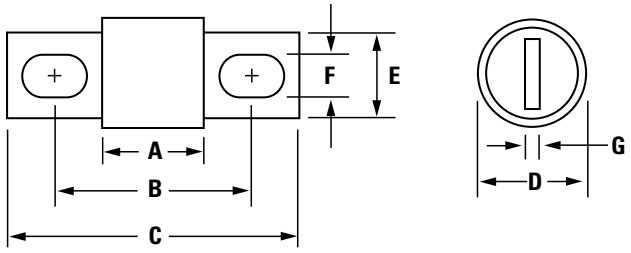

AMPERAGE	DIMENSIONS IN INCHES (MM)						
	A	B	C	D	E	F	G
70–100	3.02 (76.5)	4.38 (111.3)	5.75 (146.1)	1.5 (38.1)	1.125 (28.3)	.335 (8.5)	.189 (4.8)
125–200	3.02 (76.5)	4.38 (111.3)	5.75 (146.1)	1.5 (38.1)	1.125 (28.3)	.281 (7.1)*	.189 (4.8)
250–400	3.37 (85.7)	5.25 (133.4)	7.125 (181.0)	2.0 (50.8)	1.63 (41.3)	.406 (10.3)	.252 (6.4)
450	3.75 (95.3)	5.98 (152.0)	8.0 (203.2)	2.5 (63.5)	2.0 (50.8)	.531 (13.5)	.374 (9.5)

* SPFJ L option = .330 (8.5)
** Refer to Ordering Information table

Look for this logo to indicate products that are used in solar applications. Visit our website **Littelfuse.com/solar** for the latest updates on approvals, certifications, and new products.

FORK-LIFT STUD-MOUNTED FUSES

32/48/80 Vdc • Fast-Acting and Very Fast-Acting • 35—800 A



CNN_E, CNN & CNL Limiter Fuses

Description

CNN_E fuses are rated for applications up to 80 Vdc.
As fork lift trucks voltages increase, circuit protection needs to be rated higher than the standard CNN products to handle the increased voltage. The CNN_E is considered very fast-acting for quicker reaction time.

Specifications

Voltage Ratings	CNN_E: 80 V dc CNN: 48 V dc / 125 V ac CNL: 32 V dc / 32 V ac
Ampere Ratings	10 – 800 A*
Max. Interrupting Rating	2,500 A
Approval	UL Recognized (File: E71611)
Environmental	RoHS Compliant, Lead (Pb) Free
Country of Origin	Mexico (CNN_E only)

**See ordering information table for available amperages by series*

Ordering Information

AMPERE RATINGS CNN_E & CNN					
10†	60	125	225	325	600
35	80	150	250	350	700
40	90	175	275	400	800
50	100	200	300	500	—

†CNN Series only

AMPERE RATINGS CNL (32 Vdc)				
35	80	150	250	350
40	100	175	275	400
50	125	200	300	500
60	130	225	325	—

SERIES	TYPE	VOLT DC	AMP	CATALOG NUMBER	ORDERING NUMBER
CNN_E	VERY FAST-ACTING	80	200	CNN200E	0CNN200E.V
CNN	VERY FAST-ACTING	48	125	CNN125	0CNN125.V
CNL	FAST-ACTING	32	50	CNL050	0CNL050.V

Recommended Fuse Holders

LFFB0003Z

Web Resources

Littelfuse.com/ForkLift

Dimensions

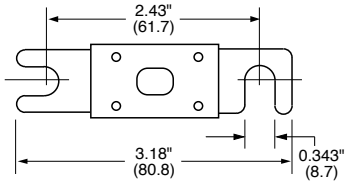



HAZGARD™ Forklift Fuses

Description

HAZGARD fuses are designed to provide overcurrent protection for low voltage equipment used in hazardous operations. It is UL 248 recognized and has been evaluated for the use in UL 583 type EE and ES applications. Unique design does not require an additional enclosure as is needed with a standard forklift fuse, saving assembly time and costs.

Ordering Information

SERIES	AMPERAGE	CATALOG NUMBER	ORDERING NUMBER
581	200	581200	0581200.X

Applications

Lift trucks, scissor lifts, pallet movers, and other low voltage battery operated equipment used to move hazardous materials.

Features/Benefits

- Evaluated for use in UL 583 hazardous applications
- Easily upgrade Type E and ES equipment to Type EE
- Does not require an external enclosure

Specifications

Voltage Ratings	48 Vac/dc
Interrupting Rating	2,500 A
Ampere Rating	35 – 800 A
Approval	UL Recognized (File: E71611)
Torque	90 in-lb
Fuse Holder	LFFB003
Environmental	RoHS Compliant
Country of Origin	Mexico

AMPERE RATINGS			
35	100	250	500
50	125	300	750*
60	150	400	800*
90	200	425	—

**Contact factory for availability*

© 2023 Littelfuse, Inc.

PLUG FUSES AND BOLT-DOWN FUSES

125 Vac • 2-30 A



Edison-base plug fuses

Description

Littelfuse plug fuses provide overcurrent protection to general purpose circuits and small motor loads. Edison-base plug fuses (TOO and TLO series) feature metal threads similar to incandescent lamp bases.

Type S plug fuses (SOO and SLO series) utilize a nonmetallic threaded base and must be used with Type S adapters (SAO series).

The National Electrical Code® permits Edison base plug fuses to be used for replacement purposes only. Type S fuses and adapters prevent shunting open fuses and over-fusing.

Specifications

Voltage Rating	125 Vac
Interrupting Rating	10 kA rms symmetrical
Approvals	UL Listed 248-11

TOO fuses are dual-element time-delay Edison-base fuses designed for motor and motor branch circuit protection; also suitable for all general purpose circuits.

TOO Fuses Sample Part # 0TOO020.Z

AMPERE RATINGS			
2	6 1/4	12	25
4	8	15	30
5	10	20	—

TLO fuses are medium time-delay Edison-base fuses designed for general purpose branch circuit protection.

TLO Fuses Sample Part # 0TLO020.Z

AMPERE RATINGS			
15	20	25	30

Web Resources

Fine more information: **Littelfuse.com/plug**

32 Vac/dc • 100-300 A



MEGA® SLO-BLO® bolt-on fuse

Description

The MEGA Fuse is designed for the protection of high current applications. Designed and patented by Littelfuse, it is ideal for battery and alternator protection and other heavy gauge cable applications.

Specifications

Voltage Rating	32 Vac/dc
Interrupting Rating	2000 A @ 32 Vdc

Ordering Information

CATALOG NUMBER	ORDERING NUMBER	AMPERAGE RATING	VOLTAGE RATING	COLOR CODE
MEG100	0MEG100.X	100	32	
MEG125	0MEG125.X	125	32	
MEG150	0MEG150.X	150	32	
MEG175	0MEG175.X	175	32	
MEG200	0MEG200.X	200	32	
MEG225	0MEG225.X	225	32	
MEG250	0MEG250.X	250	32	
MEG300	0MEG300.X	300	32	

Recommended Fuse Holders

Part Number - 298900, see website: **Littelfuse.com/mega**

Web Resources

Find more information: **Littelfuse.com/mega**

© 2023 Littelfuse, Inc.

LGR / LMF IN-LINE FUSES & LHR FUSE HOLDER



LGR Fuses

Fast-Acting • 300 Vac

Used as in-line protection for fluorescent fixtures, this fast-acting fuse is ideal for increasing the safety and reliability of lighting fixtures.

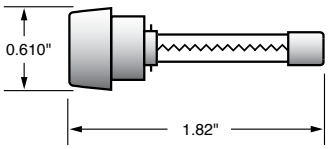

Specifications

Voltage Rating	300 Vac
Interrupting Rating	10 kA
Approvals	Standard 248-14
	UL Listed (File: E10480)
	CSA Certified (File: LR29862)

Ordering Information

AMPERE RATINGS					
1/2	1 6/10	3	6	9	15
1	2	4	7	10	—
1 1/2	2 1/2	5	8	12	—

SERIES	AMPERAGE	CATALOG NUMBER	ORDERING NUMBER
LGR	5	LGR005	0LGR005.V



LMF Fuses

Time-Delay • 300 Vac

Perfect for use in lighting systems, this 300 Vac time-delay fuse is designed to handle ballast transformer in-rush currents.

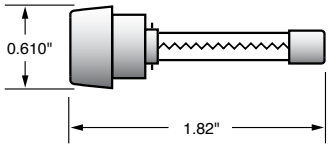

Specifications

Voltage Rating	300 Vac
Interrupting Rating	10 kA
Approvals	Standard 248-14
	UL Listed (File: E10480)
	CSA Certified (File: LR29862)

Ordering Information

AMPERE RATINGS					
3/10	8/10	1 6/10	2 8/10	4	7
1/2	1	2	3	5	8
6/10	1 1/4	2 1/2	3 2/10	6 1/4	10

SERIES	AMPERAGE	CATALOG NUMBER	ORDERING NUMBER
LMF	5	LMF005	0LMF005.V



LHR Fuse Holder

Used as in-line protection for fluorescent fixtures, the Littelfuse LGR and LMF series fuses and LHR holder offer increased safety and reliability to lighting systems.

By individually fusing fixtures, electrical problems are isolated from the rest of the circuit. The added benefits of this is the ability to quickly identify the problem fixture and reduce the repair time.

Fuse holders are rated up to 10 amperes at 300 volts and are equipped with 7" 18 AWG leads. Order part number LHR000 for two leads, and part number LHR001 for one lead; with the other terminal used for insertion of 18 AWG ballast lead.

Specifications

Voltage Rating	300 Vac
Ampere Rating	LHR000 10 A
	LHR001 10 A
Approvals	UL Recognized
	CSA Certified
	(File: 73160)
Flammability Rating	UL94 V-0
Example part number	LHR001
Ordering number	0LHR001T

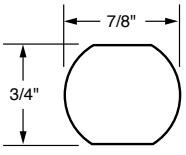

Knock-out Hole

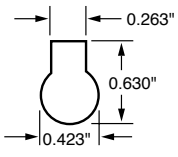

Keyhole Punch

Mounting Information

LHR001/LHR000 will fit keyhole punch or 0.875" knock-out hole. Anti-rotation feature is provided when used with keyhole punch.

A "U-shaped" clip is available for panel mounting (packaged 10 clips per bag): Order part number LHROCA.

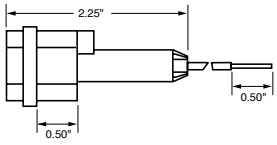

© 2023 Littelfuse, Inc.

LFCL • CABLE LIMITERS

250/600 VAC



TYPE	TERMINATION	VOLTAGE RATING	COPPER CABLE SIZE	ORDERING NUMBER
1	CABLE TO CABLE	600 VAC	4 AWG	LFCL0004ZC1
		600 VAC	3 AWG	LFCL0003ZC1
		600 VAC	2 AWG	LFCL0002ZC1
		600 VAC	1 AWG	LFCL0001ZC1
		600 VAC	1/0 AWG	LFCL01/0ZC1
		600 VAC	2/0 AWG	LFCL02/0ZC1
		600 VAC	3/0 AWG	LFCL03/0ZC1
		600 VAC	4/0 AWG	LFCL04/0ZC1
		600 VAC	250 kcmil	LFCL0250ZC1
		600 VAC	350 kcmil	LFCL0350ZC1
		600 VAC	500 kcmil	LFCL0500ZC1
		600 VAC	600 kcmil	LFCL0600ZC1
		600 VAC	750 kcmil	LFCL0750ZC1
		600 VAC	1000 kcmil	LFCL1000ZC1
3	CABLE TO OFFSET BUS	600 VAC	12 AWG	LFCL0012ZC3
		600 VAC	10 AWG	LFCL0010ZC3
		600 VAC	6 AWG	LFCL0006ZC3
		600 VAC	4 AWG	LFCL0004ZC3
		600 VAC	2 AWG	LFCL0002ZC3
		600 VAC	1 AWG	LFCL0001ZC3
		600 VAC	1/0 AWG	LFCL01/0ZC3
		600 VAC	2/0 AWG	LFCL02/0ZC3
		600 VAC	3/0 AWG	LFCL03/0ZC3
		600 VAC	4/0 AWG	LFCL04/0ZC3
		600 VAC	250 kcmil	LFCL0250ZC3
		600 VAC	350 kcmil	LFCL0350ZC3
		600 VAC	500 kcmil	LFCL0500ZC3
		600 VAC	600 kcmil	LFCL0600ZC3
		600 VAC	750 kcmil	LFCL0750ZC3
5	STRAIGHT BUS TO OFFSET BUS	250 VAC	2/0 & 3/0 AWG	LFCL-UHA*
		250 VAC	3/0 AWG	LFCL-UHJ-M*
		250 VAC	350 kcmil	LFCL-UHJ-T*
		250 VAC	600 kcmil	LFCL-UHJ-W*
		600 VAC	4/0 AWG	LFCL04/0ZC5*
		600 VAC	250 kcmil	LFCL0250ZC5*
		600 VAC	350 kcmil	LFCL0350ZC5*
		600 VAC	500 kcmil	LFCL0500ZC5*
		600 VAC	750 kcmil	LFCL0750ZC5*
6	MOLE TO CABLE	600 VAC	4/0 AWG	LFCL04/0ZC6
		600 VAC	250 kcmil	LFCL0250ZC6
		600 VAC	500 kcmil	LFCL0500ZC6

**Suitable for use with aluminum cables / conductors. For sizing contact Tech-Line at 800-TEC-FUSE.*

Description

Cable limiters are fusible devices that provide very fast short-circuit protection, primarily to faulted cables, but also to other conductors such as busway. Cable limiters do not have an ampere rating, and cannot be used to provide overload protection. They are instead selected by cable size; for example, a 500 kcmil cable requires a 500 kcmil cable limiter. Their main use is to isolate faulted cables in circuits containing three or more parallel conductors per phase. They may be installed on the line side of the main service to provide short-circuit protection to the service conductors. This is especially important when service conductors are tapped from large low voltage networks or from large low impedance transformers.

Cable limiters have terminals which permit them to be installed in a variety of equipment. The most common configuration is the offset blade on one end and the crimp terminal on the other end. This permits the limiter to replace a cable terminal (lug).

Applications

- Service Entrance Conductors
- Between Transformer or network bus and bus-way terminal boxes as secondary ties.
- Feeders with three or more conductors per phase to share heavier load in large commercial and industrial installations
- Multiple Single conductor services, tapped from single (utility) transformer in multi-family residential and small commercial installations.

Features

- Current-limiting characteristics provide protection to conductor insulation and reduce damage when faults occur.
- Properly applied cable limiters may permit the use of equipment with reduced withstand ratings
- Wide variety of terminations and cable ratings permit use in almost every situation.

Specifications

Voltage Ratings	250 VAC, 600 VAC
Interrupting Rating	100 kA (250 VAC), 200 kA (600 VAC)
Cable Size Range	12 AWG – 1000Kcmil Copper
Approvals	Contact Tech-Line at 800-TEC-FUSE
Recommended Installation Tool	**Make:** Thomas & Betts **Crimp Tool:** TBM14_, TBM15_

Web Resources

For additional information, see website:
Littelfuse.com/lfcl

CYLINDRICAL FUSES

500 Volts • 0.5-100 A

IEC RoHS



Description

Littelfuse fast acting (gL-gG) fuses are used for the protection of cables against short-circuits. Time-lag (aM) fuses are used for protection of motors.

Specifications

Standards 10x38 mm: IEC 60269
14x51 mm / 22x58mm: IEC 269-2-1

Ordering Information

BASE PART NUMBER	SIZE (mm)	CURRENT RANGE	VOLTAGE (AC)	INTERRUPTING RATING
CY10X38	10 x 38	0.5-16 A	500 V	120 kA
		20-25 A (aM)	400 V	120 kA
		20-25 A (gL-gG)	500 V	120 kA
		32 A	400 V	120 kA
CY14X51	14 x 51	2-25 A	690 V	80 kA
		32-40 A	500 V	120 kA
		50 A	400 V	120 kA
CY22X58	22 x 58	16-63 A	690 V	80 kA
		80-100 A	500 V	120 kA

AMPERAGE	gL-gG ORDERING NUMBERS			aM ORDERING NUMBERS		
	10 X 38	14 X 51	22 X 58	10 X 38	14 X 51	22 X 58
0.5	CY10X38G05	—	—	CY10X38M05	—	—
1	CY10X38G1	—	—	CY10X38M1	—	—
2	CY10X38G2	CY14X51G2	—	CY10X38M2	CY14X51M2	—
4	CY10X38G4	CY14X51G4	—	CY10X38M4	CY14X51M4	—
6	CY10X38G6	CY14X51G6	—	CY10X38M6	CY14X51M6	—
8	CY10X38G8	CY14X51G8	—	CY10X38M8	CY14X51M8	—
10	CY10X38G10	CY14X51G10	—	CY10X38M10	CY14X51M10	—
12	CY10X38G12	CY14X51G12	—	CY10X38M12	CY14X51M12	—
16	CY10X38G16	CY14X51G16	CY22X58G16	CY10X38M16	CY14X51M16	CY22X58M16
20	CY10X38G20	CY14X51G20	CY22X58G20	CY10X38M20	CY14X51M20	CY22X58M20
25	CY10X38G25	CY14X51G25	CY22X58G25	CY10X38M25	CY14X51M25	CY22X58M25
32	CY10X38G32	CY14X51G32	CY22X58G32	CY10X38M32	CY14X51M32	CY22X58M32
40	—	CY14X51G40	CY22X58G40	—	CY14X51M40	CY22X58M40
50	—	CY14X51G50	CY22X58G50	—	CY14X51M50	CY22X58M50
63	—	—	CY22X58G63	—	—	CY22X58M63
80	—	—	CY22X58G80	—	—	CY22X58M80
100	—	—	CY22X58G100	—	—	CY22X58M100

Dimensions

FUSE SIZE	DIMENSIONS mm	
	A	B
10 X 38	10	38
14 X 51	14	51
22 X 58	22	58

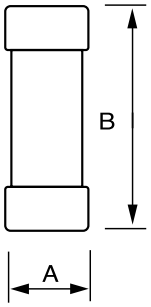

Web Resources

For additional product information
Fuses: **Littelfuse.com/cy**
Fuse Holders: **Littelfuse.com/lfpsm**
Littelfuse.com/cyh

Fuse Holders

AMP RATING	POLES	SIZE	CATALOG / ORDERING #	TERMINAL TYPE	DIN RAIL MOUNT
32 A	1	10 X 38	LFPSM0001Z	Pressure Plate	•
32 A	2	10 X 38	LFPSM0002Z	Pressure Plate	•
32 A	3	10 X 38	LFPSM0003Z	Pressure Plate	•
32 A	4	10 X 38	LFPSM0004Z	Pressure Plate	•
32 A	1	10 X 38	LFPSM0001ZXID*	Pressure Plate	•
32 A	2	10 X 38	LFPSM0002ZXID*	Pressure Plate	•
32 A	3	10 X 38	LFPSM0003ZXID*	Pressure Plate	•
32 A	4	10 X 38	LFPSM0004ZXID*	Pressure Plate	•
50 A	1	14 X 51	CYH14511	Pressure Plate	•
50 A	2	14 X 51	CYH14512	Pressure Plate	•
50 A	3	14 X 51	CYH14513	Pressure Plate	•
100 A	1	22 X 58	CYH22581	Pressure Plate	•
100 A	2	22 X 58	CYH22582	Pressure Plate	•
100 A	3	22 X 58	CYH22583	Pressure Plate	•

** Indicating*

© 2023 Littelfuse, Inc.

OEM CUSTOM PRODUCTS

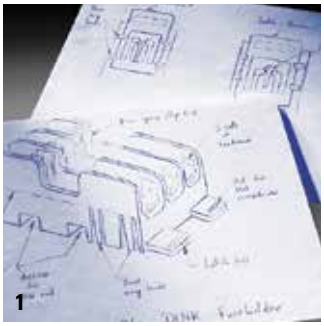
1

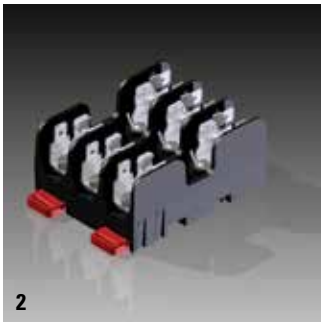
2

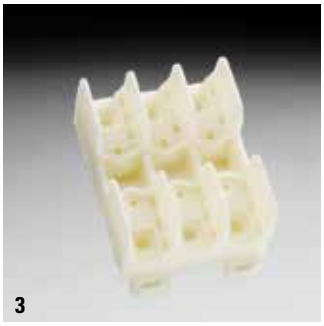
3


4

To speak with a sales associate regarding your application needs, call 800-TEC-FUSE (800-382-3873) or email techline@Littelfuse.com.

Description

We understand that existing solutions don't always solve your current problems. Building on 90 years of circuit protection experience, the Littelfuse engineering team collaborates with customers to develop customized solutions for applications such as solar panels, HVAC systems, lift trucks, lighting fixtures, industrial restaurant equipment and power converters.

Process

The custom product design process begins with a situation analysis from our experienced engineers followed by our 4-step collaborative product development process.

1. Initial concept sketch created
2. CAD drawings to formalize the product description
3. 3D solid prototype to verify design
4. Final production parts that meet your design needs and specifications

Additional Customized Products

HAZGARD Fork Lift Fuse 64

Web Resources

To learn more and contact our OEM team, visit:
Littelfuse.com/industrialoem

Examples



Two-Pole Combination Block

Save space and money by combining multiple components in one unit. Littelfuse collaborated with the customer to develop a cost effective UL listed component that combined a 600 Volt 100A two-pole Class T fuse block with a two-openings-per-pole splicer block.



Custom-Leaded Fuse

Save space and reduce cost by eliminating the fuse block component. Littelfuse designed a series of custom through-hole PC-board mountable KLKD Midget fuses for a consumer application where reduced cost was more important than replaceability.

© 2023 Littelfuse, Inc.

Section Overview

Littelfuse high-speed fuses protect critical power semiconductors against short circuits in applications including inverters, variable-speed drives, UPS and DC drive systems.

For the complete portfolio of high-speed products visit:
Littelfuse.com/High-Speed







HIGH-SPEED FUSES

Table of Contents

High-Speed Square Body Fuses 99

MS Series High-Speed Fuse Microswitch 123

High-Speed Round-Body Fuses 125

Traditional High-Speed Fuses 131



POWR-Speed® High-Speed Circuit Protection

Littelfuse engineering is constantly developing new products to meet the needs of the industry. For the latest information on the growing POWR-Speed product portfolio, visit:
Littelfuse.com/High-Speed

© 2023 Littelfuse, Inc.

ESR SERIES HIGH-SPEED SQUARE BODY FUSES

Battery Protection Fuses • 1500 V Dc • Class aBat • 125 A



Description

The Littelfuse Energy Storage Rack (ESR) series of fuses is designed specifically to protect battery racks in energy storage systems, inverters, and many other dc applications. The 1500 V dc high-speed square body fuse is extremely fast-acting to respond quickly to a range of fault currents to safeguard the battery module or other devices.

This Class aBat partial range fuse has superior short circuit protection and a low minimum breaking capacity (MBC)—from 300 % or 3 times the fuse's rated current to 175 kA (250 kA self-certified)—to cover a range of over currents that traditional high-speed partial range fuses do not protect against.

The ESR fuse safely interrupts most faults in a battery storage system to avoid catastrophic failures and costly shutdowns.

Features & Benefits

FEATURES	BENEFITS
High dc interrupting rating	Provides superior short-circuit protection and the ability to scale-up systems without the need to redesign the existing circuit protection, saving time and costs
Low minimum breaking current	Offers easy coordination with battery modules and reduces size and rating of dc contactors to save space and costs
Extremely fast acting	Delivers high-speed performance
Low watt loss	Maximizes efficiency by preventing energy loss and minimizing the wasted power of components
Conforms to the IEC60269-7 battery standard	Specifically design to safeguard evolving battery technologies with fuse circuit protection
Compact NH 1XL size	Saves space and offers design flexibility

Applications

- Battery energy storage systems (BESSs)
  - Battery Protection Unit (BPU) and battery racks
- Power conversion systems
- Dc common bus systems
- Hybrid PV-BESS inverters

ESR SERIES HIGH-SPEED SQUARE BODY FUSES

Specifications

Voltage Rating	1500 V dc
Amperage Rating	125 A
Interrupting Rating	175 kA UL (250 kA self-certified)
Time Constant	</= 3 ms
Mounting	Bolted-blade style, DIN-blade style
Material	Body: ceramic Contacts: plated copper (bladed)
Applicable Standards	UL 248-13, IEC 60269-7
Environmental	RoHS Compliant, REACH, Halogen Free
Operating Temperature	-55 °C to +125 °C
Storage Temperature	Up to +35 °C with relative humidity <65 %
Country of Origin	Mexico

Certification & Compliance

cURus	cURus Recognized (File: E71611)
CE	ESR_UB_220411_0
RoHS	RoHS 2 Directive 2011/65/EU Directive (EU) 2015/863
REACH	Regulation (EC) 1907/2006
UKCA	UKCA-ESR_UB_220621_0

Ordering Information

CASE SIZE	CATALOG NUMBER	ORDERING NUMBER	UPC	BOX QUANTITY
NH 1XL	ESR1XLDB0125	ESR1XLDB0125X	07945830630	1 pc/box
NH 1XL	ESR1XLUB0125	ESR1XLUB0125X	07945830629	1 pc/box

Electrical Specifications

CASE SIZE	CATALOG NUMBER		AMPERE RATING (A)	VOLTAGE RATING (V)	INTERRUPTING RATING	MINIMUM BREAKING CAPACITY (A)	MELTING (PRE-ARC) I^2T (A^2S)	TOTAL CLEARING I^2T (A^2S) AT RATED VOLTAGE	WATTS LOSS AT 100 % RATED CURRENT (W)	AGENCY CERTIFICATION
	BOLTED BLADE (UB)	DIN BLADE (DB)		DC	DC			DC		cURus
NH 1XL	ESR1XLUB0125	ESR1XLDB0125	125	1500	175 kA (250 kA Self-certified)	375	2245	45000	53	•

© 2023 Littelfuse, Inc.

ESR SERIES HIGH-SPEED SQUARE BODY FUSES

Dimensions

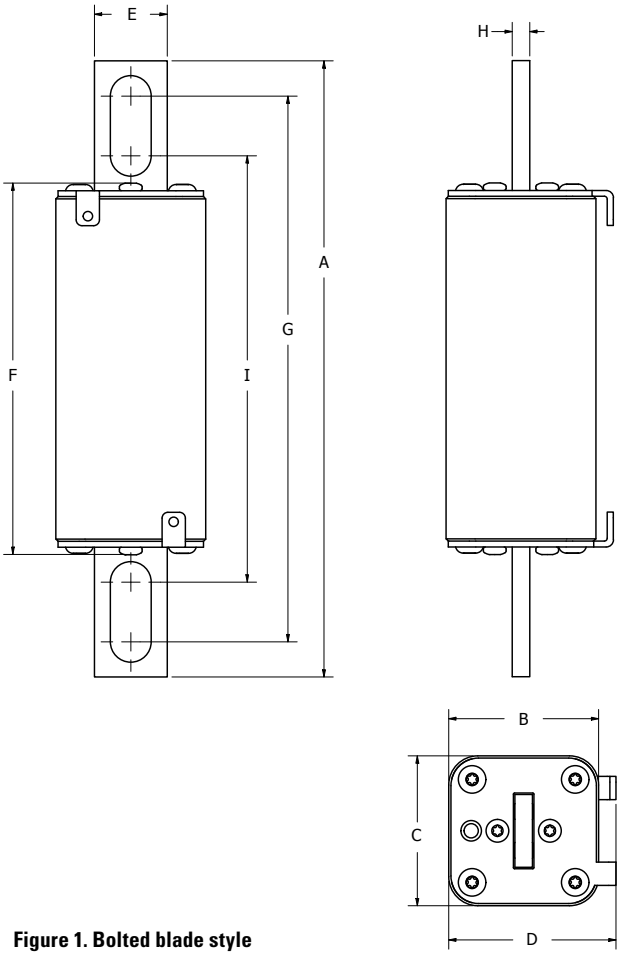

Figure 1. Bolted blade style

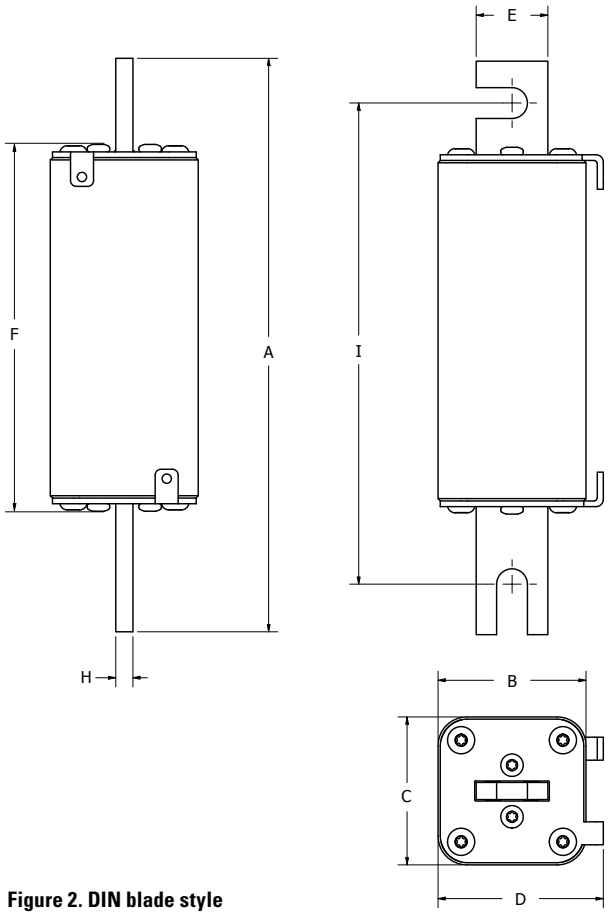

Figure 2. DIN blade style

DIMENSIONS MM (IN)													
CASE SIZE	MOUNTING STYLE	FIGURE	A	B	C	D	E	F	G	H	I	RECOMMENDED FASTENER	RECOMMENDED TORQUE
NH 1XL	BOLTED BLADE (UB)	1	211.7 (8.33)	51.5 (2.03)	51.5 (2.03)	57.5 (2.26)	25.0 (0.98)	127.7 (5.03)	187.5 (7.38)	6.0 (0.24)	146.5 (5.77)	12 (½)	64 Nm
NH 1XL	DIN BLADE (DB)	2	199.7 (7.86)	51.5 (2.03)	51.5 (2.03)	57.5 (2.26)	25.0 (0.98)	127.7 (5.03)	-	6.0 (0.24)	167.5 (6.59)	10 (3/8)	26 Nm

© 2023 Littelfuse, Inc.

PSX SERIES HIGH-SPEED SQUARE BODY FUSES

Battery Protection Fuses • 1500 V Dc Class aBat • 80 A–1400 A



Description

Littelfuse PSX series 1500 V dc high-speed square body fuses are specially designed to protect battery energy storage systems (BESS), photovoltaic inverters, and many dc applications such as dc common bus systems, larger industrial regenerative drives, rectifiers and metal processing equipment.

The PSX series fuses are extremely fast-acting, offering high-speed performance up to 1500 V dc, ranging from 80 A to 1400 A in the smallest NH XL package sizes. The PSX series is available with multiple mounting terminations including flush-end, DIN, and bolted-blade styles. Visual blown fuse indication is standard on all fuses and optional micro-switch is available for external indication.

The PSX series is certified to UL248-13 and designed to meet IEC 60269-7 (Class aBat) battery protection fuse standard.

Features/Benefits

- High dc voltage rating up to 1500 V dc
- Dc interrupting rating is 250 kA
- Extremely fast acting for high speed performance
- Low watt loss provides energy efficiency for BESS applications
- Compact NH 1XL and 3XL sizes offer flexibility

Applications

- Battery energy storage systems (BESSs)
- Power conversion systems
- Dc common bus systems
- Hybrid PV-BESS inverters
- Regenerative drives
- Industrial heaters and welding equipment
- Metal processing equipment

Specifications

Voltage Rating	Dc: 1500 V
Amperage Rating	80 A–1400 A
Interrupting Rating	Dc: 250 kA
Time Constant	1XL: </= 3 ms 3XL: </= 5 ms
Microswitch	Yes
Mounting	Bolted-blade style, DIN-blade style, Metric flush-end style
Material	Body: ceramic Contacts: plated copper (bladed) plated brass (flush end)
Approvals	cURus Recognized (File: E71611)
Applicable Standards	UL 248-13, IEC 60269-7
Environmental	RoHS Compliant, REACH
Operating Temperature	-55 °C to +125 °C
Storage Temperature	Up to +35 °C with relative humidity <65 %
Country of Origin	Mexico

Ordering Part Number

PSX 3XL UB 1400 X

- **Series**
- **Case Size**: 1XL, 3XL
- **Termination**: UB = bolted blade; DB = DIN blade; FL = flush-metric
- **Amperage**
- **Packing Quantity**: X = (1 pc/box)

Catalog Number

SERIES	CASE SIZE	TERMINATION	AMPERAGE	CATALOG NUMBER	ORDERING PART NUMBER
PSX	3XL	UB	1400	PSX3XLUB1400	PSX3XLUB1400X

Recommended Accessories

Microswitch: MSXL2000C

Web Resources

Download technical documents: **Littelfuse.com/PSX**

© 2023 Littelfuse, Inc.

PSX SERIES HIGH-SPEED SQUARE BODY FUSES

Electrical Characteristics

CASE SIZE	CATALOG NUMBER			AMPERE RATING (A)	VOLTAGE RATING (V)	INTERRUPTING RATING	MINIMUM BREAKING CAPACITY (A)	MELTING (PRE-ARC) I^2T (A^2S)	TOTAL CLEARING I^2T (A^2S) AT RATED VOLTAGE	WATTS LOSS AT 100% RATED CURRENT (W)	AGENCY CERTIFICATION
	FLUSH METRIC (FL)	BOLTED BLADE (UB)	DIN BLADE (DB)		DC	DC			DC		cURus
NH 1XL	PSX1XLFL0080	PSX1XLUB0080	PSX1XLDB0080	80	1500	250 kA	800 A	2048	8720	16.4	•
	PSX1XLFL0100	PSX1XLUB0100	PSX1XLDB0100	100	1500	250 kA	1000 A	3540	15485	19.1	•
	PSX1XLFL0125	PSX1XLUB0125	PSX1XLDB0125	125	1500	250 kA	1250 A	7091	35720	19.6	•
	PSX1XLFL0160	PSX1XLUB0160	PSX1XLDB0160	160	1500	250 kA	1600 A	13704	55490	24.6	•
	PSX1XLFL0200	PSX1XLUB0200	PSX1XLDB0200	200	1500	250 kA	2000 A	18016	77240	34.6	•
	PSX1XLFL0250	PSX1XLUB0250	PSX1XLDB0250	250	1500	250 kA	2500 A	36552	156450	38.5	•
	PSX1XLFL0280	PSX1XLUB0280	PSX1XLDB0280	280	1500	250 kA	2800 A	36552	156450	48.7	•
	PSX1XLFL0315	PSX1XLUB0315	PSX1XLDB0315	315	1500	250 kA	3150 A	56940	212400	53.6	•
	PSX1XLFL0350	PSX1XLUB0350	PSX1XLDB0350	350	1500	250 kA	3500 A	86623	332050	51.8	•
	PSX1XLFL0400	PSX1XLUB0400	PSX1XLDB0400	400	1500	250 kA	4000 A	116271	352600	64.4	•
	PSX1XLFL0450	PSX1XLUB0450	PSX1XLDB0450	450	1500	250 kA	6750 A	149336	540850	69.3	•
	PSX1XLFL0500	PSX1XLUB0500	PSX1XLDB0500	500	1500	250 kA	7500 A	250109	774600	71.5	•
	PSX1XLFL0550	PSX1XLUB0550	PSX1XLDB0550	550	1500	250 kA	8250 A	276650	924967	83.1	•
	PSX1XLFL0630	PSX1XLUB0630	PSX1XLDB0630	630	1500	250 kA	9450 A	276650	924967	127.3	•
NH 3XL	PSX3XLFL0450	PSX3XLUB0450	PSX3XLDB0450	450	1500	250 kA	4500 A	57143	194500	146.3	•
	PSX3XLFL0500	PSX3XLUB0500	PSX3XLDB0500	500	1500	250 kA	5000 A	98570	333900	132.5	•
	PSX3XLFL0550	PSX3XLUB0550	PSX3XLDB0550	550	1500	250 kA	5500 A	142790	451600	136.7	•
	PSX3XLFL0630	PSX3XLUB0630	PSX3XLDB0630	630	1500	250 kA	6300 A	205617	650304	150.9	•
	PSX3XLFL0700	PSX3XLUB0700	PSX3XLDB0700	700	1500	250 kA	7000 A	305720	1003650	164.5	•
	PSX3XLFL0800	PSX3XLUB0800	PSX3XLDB0800	800	1500	250 kA	8000 A	335493	1150000	209.6	•
	PSX3XLFL0900	PSX3XLUB0900	PSX3XLDB0900	900	1500	250 kA	9000 A	403262	1308500	266.9	•
	PSX3XLFL1000	PSX3XLUB1000	PSX3XLDB1000	1000	1500	250 kA	10000 A	484792	1791500	335.0	•
	PSX3XLFL1100	PSX3XLUB1100	PSX3XLDB1100	1100	1500	250 kA	11000 A	656719	2201250	341.0	•
	PSX3XLFL1250	PSX3XLUB1250	PSX3XLDB1250	1250	1500	250 kA	12500 A	995376	3003500	346.9	•
	PSX3XLFL1400	PSX3XLUB1400	PSX3XLDB1400	1400	1500	250 kA	14000 A	1395828	4228250	361.9	•

Ordering Information

CASE SIZE	FLUSH METRIC (FL)			BOLTED BLADE (UB)			DIN BLADE (DB)			BOX QUANTITY
	CATALOG NUMBER	ORDERING PART NUMBER	UPC	CATALOG NUMBER	ORDERING PART NUMBER	UPC	CATALOG NUMBER	ORDERING PART NUMBER	UPC	
NH 1XL	PSX1XLFL0080	PSX1XLFL0080X	07945825798	PSX1XLUB0080	PSX1XLUB0080X	07945825819	PSX1XLDB0080	PSX1XLDB0080X	07945826320	1 pc/box
	PSX1XLFL0100	PSX1XLFL0100X	07945825799	PSX1XLUB0100	PSX1XLUB0100X	07945825820	PSX1XLDB0100	PSX1XLDB0100X	07945826321	1 pc/box
	PSX1XLFL0125	PSX1XLFL0125X	07945825800	PSX1XLUB0125	PSX1XLUB0125X	07945825821	PSX1XLDB0125	PSX1XLDB0125X	07945826322	1 pc/box
	PSX1XLFL0160	PSX1XLFL0160X	07945825801	PSX1XLUB0160	PSX1XLUB0160X	07945825822	PSX1XLDB0160	PSX1XLDB0160X	07945826323	1 pc/box
	PSX1XLFL0200	PSX1XLFL0200X	07945825802	PSX1XLUB0200	PSX1XLUB0200X	07945825823	PSX1XLDB0200	PSX1XLDB0200X	07945826324	1 pc/box
	PSX1XLFL0250	PSX1XLFL0250X	07945825803	PSX1XLUB0250	PSX1XLUB0250X	07945825824	PSX1XLDB0250	PSX1XLDB0250X	07945826325	1 pc/box
	PSX1XLFL0280	PSX1XLFL0280X	07945825804	PSX1XLUB0280	PSX1XLUB0280X	07945825825	PSX1XLDB0280	PSX1XLDB0280X	07945826326	1 pc/box
	PSX1XLFL0315	PSX1XLFL0315X	07945825805	PSX1XLUB0315	PSX1XLUB0315X	07945825826	PSX1XLDB0315	PSX1XLDB0315X	07945826327	1 pc/box
	PSX1XLFL0350	PSX1XLFL0350X	07945825806	PSX1XLUB0350	PSX1XLUB0350X	07945825827	PSX1XLDB0350	PSX1XLDB0350X	07945826328	1 pc/box
	PSX1XLFL0400	PSX1XLFL0400X	07945825807	PSX1XLUB0400	PSX1XLUB0400X	07945825828	PSX1XLDB0400	PSX1XLDB0400X	07945826329	1 pc/box
	PSX1XLFL0450	PSX1XLFL0450X	07945825808	PSX1XLUB0450	PSX1XLUB0450X	07945825829	PSX1XLDB0450	PSX1XLDB0450X	07945826330	1 pc/box
	PSX1XLFL0500	PSX1XLFL0500X	07945825809	PSX1XLUB0500	PSX1XLUB0500X	07945826310	PSX1XLDB0500	PSX1XLDB0500X	07945826331	1 pc/box
	PSX1XLFL0550	PSX1XLFL0550X	07945825810	PSX1XLUB0550	PSX1XLUB0550X	07945826311	PSX1XLDB0550	PSX1XLDB0550X	07945826332	1 pc/box
	PSX1XLFL0630	PSX1XLFL0630X	07945825811	PSX1XLUB0630	PSX1XLUB0630X	07945826312	PSX1XLDB0630	PSX1XLDB0630X	07945826333	1 pc/box
NH 3XL	PSX3XLFL0450	PSX3XLFL0450X	07945828641	PSX3XLUB0450	PSX3XLUB0450X	07945828645	PSX3XLDB0450	PSX3XLDB0450X	07945828649	1 pc/box
	PSX3XLFL0500	PSX3XLFL0500X	07945828642	PSX3XLUB0500	PSX3XLUB0500X	07945828646	PSX3XLDB0500	PSX3XLDB0500X	07945828650	1 pc/box
	PSX3XLFL0550	PSX3XLFL0550X	07945828643	PSX3XLUB0550	PSX3XLUB0550X	07945828647	PSX3XLDB0550	PSX3XLDB0550X	07945828651	1 pc/box
	PSX3XLFL0630	PSX3XLFL0630X	07945828644	PSX3XLUB0630	PSX3XLUB0630X	07945828648	PSX3XLDB0630	PSX3XLDB0630X	07945828652	1 pc/box
	PSX3XLFL0700	PSX3XLFL0700X	07945825812	PSX3XLUB0700	PSX3XLUB0700X	07945826313	PSX3XLDB0700	PSX3XLDB0700X	07945826334	1 pc/box
	PSX3XLFL0800	PSX3XLFL0800X	07945825813	PSX3XLUB0800	PSX3XLUB0800X	07945826314	PSX3XLDB0800	PSX3XLDB0800X	07945826335	1 pc/box
	PSX3XLFL0900	PSX3XLFL0900X	07945825814	PSX3XLUB0900	PSX3XLUB0900X	07945826315	PSX3XLDB0900	PSX3XLDB0900X	07945826336	1 pc/box
	PSX3XLFL1000	PSX3XLFL1000X	07945825815	PSX3XLUB1000	PSX3XLUB1000X	07945826316	PSX3XLDB1000	PSX3XLDB1000X	07945826337	1 pc/box
	PSX3XLFL1100	PSX3XLFL1100X	07945825816	PSX3XLUB1100	PSX3XLUB1100X	07945826317	PSX3XLDB1100	PSX3XLDB1100X	07945826338	1 pc/box
	PSX3XLFL1250	PSX3XLFL1250X	07945825817	PSX3XLUB1250	PSX3XLUB1250X	07945826318	PSX3XLDB1250	PSX3XLDB1250X	07945826339	1 pc/box
	PSX3XLFL1400	PSX3XLFL1400X	07945825818	PSX3XLUB1400	PSX3XLUB1400X	07945826319	PSX3XLDB1400	PSX3XLDB1400X	07945826340	1 pc/box

© 2023 Littelfuse, Inc.

PSX SERIES HIGH-SPEED SQUARE BODY FUSES

Dimensions

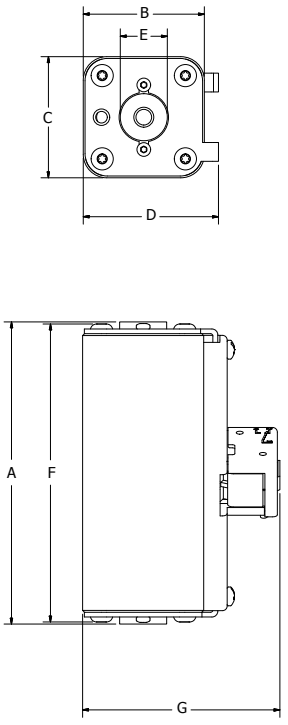

Figure 1. Flush-metric style

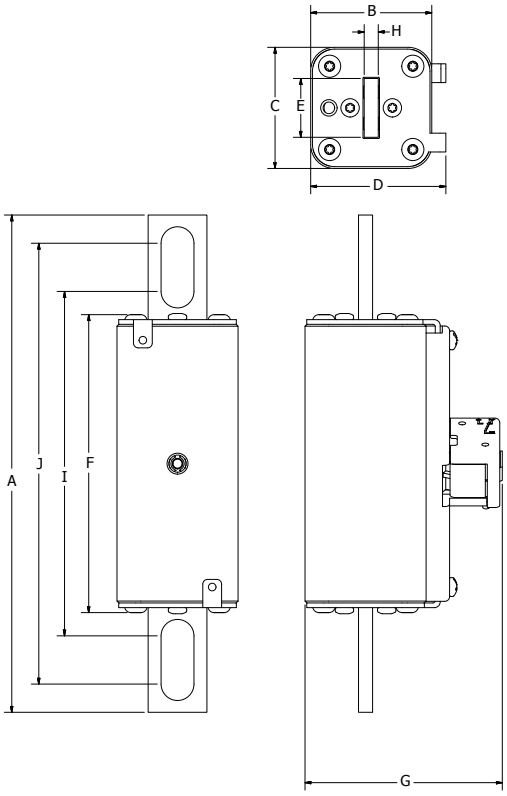

Figure 2. Bolted-blade style

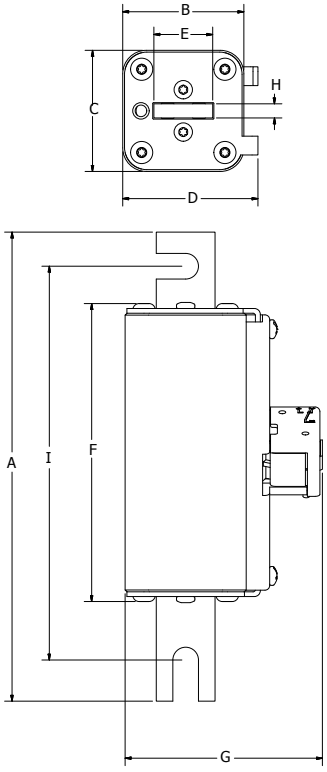

Figure 3. DIN-blade style

DIMENSIONS MM (IN)															
CASE SIZE	MOUNTING STYLE	FIGURE	A	B	C	D	E	F	G*	H	I	J	RECOMMENDED FASTENER	THREAD	RECOMMENDED TORQUE
NH 1XL	FLUSH METRIC (FL)	1	128.5 (5.06)	51.5 (2.03)	51.5 (2.03)	57.5 (2.26)	20.0 (0.79)	126.7 (4.99)	83.9 (3.30)	-	-	-	-	M8 x 1.25	13–20 Nm
	BOLTED BLADE (UB)	2	211.5 (8.33)	51.5 (2.03)	51.5 (2.03)	57.5 (2.26)	25.0 (0.98)	126.7 (4.99)	83.9 (3.30)	6.0 (0.24)	146.5 (5.77)	187.5 (7.38)	12 mm (1/2)	-	64 Nm
	DIN BLADE (DB)	3	199.5 (7.85)	51.5 (2.03)	51.5 (2.03)	57.5 (2.26)	25.0 (0.98)	126.7 (4.99)	83.9 (3.30)	6.0 (0.24)	167.5 (6.59)	-	10 mm (3/8)	-	26 Nm
NH 3XL	FLUSH METRIC (FL)	1	129.5 (5.10)	73.5 (2.89)	73.5 (2.89)	79.5 (3.13)	30.0 (1.18)	128.1 (5.04)	105.9 (4.17)	-	-	-	-	M12 x 1.75	45–55 Nm
	BOLTED BLADE (UB)	2	213.5 (8.41)	73.5 (2.89)	73.5 (2.89)	79.5 (3.13)	36.0 (1.42)	128.7 (5.07)	105.9 (4.17)	6.0 (0.24)	153.1 (6.03)	186.1 (7.33)	14 mm (9/16)	-	92 Nm
	DIN BLADE (DB)	3	199.0 (7.83)	73.5 (2.89)	73.5 (2.89)	79.5 (3.13)	36.0 (1.42)	128.7 (5.07)	105.9 (4.17)	6.0 (0.24)	166.8 (6.57)	-	10 mm (3/8)	-	26 Nm

*These dimensions include the optional bolt-on microswitch.

© 2023 Littelfuse, Inc.

PSR SERIES HIGH-SPEED SQUARE BODY FUSES

Semiconductor Fuses • Flush End • 40 A–2250 A



Description

Littelfuse PSR series high-speed square body fuses are specially designed for protection of power semiconductor devices such as diodes, triacs, IGBTs, SCRs, MOSFETs, and other solid state devices that are typically designed into power conversion and power conditioning equipment. Variable frequency drives, inverters, UPS, rectifiers, and soft-starters are examples of typical equipment designed with sensitive power semiconductor devices that cannot withstand any line surge or overcurrent conditions and require high-speed protection.

Littelfuse POWR-*SPEED* PSR series products offer optimized circuit protection at the extremely fast speed required to protect modern day power conversion devices. Such products are commonly found in numerous applications including pulp and paper industries, cranes and heavy-lifting equipment, processing industries, wastewater treatment plants, and various large factories and MRO facilities.

Features/Benefits

- Best in class dc performance
- Extremely current limiting
- Superior cycling capability
- Global certification cURus, CCC*
- Direct bus-bar mount design
- Visual and optional microswitch fuse blown indication
- Low watt-loss design
- Compliance with US and Canadian requirements
- Fast-acting Class aR performance

Applications

- Power conversion devices (UPS, inverter, rectifiers, drives)
- Dc systems (dc common bus, dc injection braking)
- Battery protection application (energy storage systems)
- Electric vehicle charging stations
- Heaters and power supplies

Specifications

Voltage Range	Ac: 450 V–1300 V Dc: 450 V–1000 V
Amperage Range	40 A–2250 A
Interrupting Range	Ac: 100 kA–200 kA Dc: 150 kA
Time Constant	10 ms at IR
Microswitch	Yes
Mounting	Flush-end style
Material	Body: ceramic Contacts: plated brass
Approvals	cURus Recognized (File: E71611) CCC (Ac voltage) *
Applicable Standards	UL248-13, IEC 60269-4 (Class aR)
Environmental	RoHS Compliant, REACH
Operating Temperature	-55 °C to +125 °C
Storage Temperature	Up to +35 °C with relative humidity <65 %
Country of Origin	Mexico

Ordering Part Number

PSR 030 FL 0550 Z

- **Series**
- **Case Size**: 30, 31, 32, 33, 70, 71, 72, 73
- **Termination**: FL - Flush end metric thread; FS - Flush end inches thread
- **Amperage**
- **Packing Quantity**: Z = (2–3 pcs/box)

Catalog Number

SERIES	CASE SIZE	TERMINATION	AMPERAGE	CATALOG NUMBER	ORDERING PART NUMBER
PSR	030	FL	0550	PSR030FL0550	PSR030FL0550Z

Recommended Accessories

Microswitch: MS3H1000C (case size 30 to 33)
MS7H1500C (case size 70 to 73)

Web Resources

Download technical documents: **Littelfuse.com/PSR**

Note: high-speed fuses are designed for fixed installations. They are not intended for use in moving vehicle applications.

* Refer to CCC section of Electrical Characteristics table

PSR SERIES HIGH-SPEED SQUARE BODY FUSES

Electrical Characteristics

CASE SIZE	CATALOG NUMBER		AMPERE RATING (A)	VOLTAGE RATING (V)			INTERRUPTING RATING		MELTING (PRE-ARC) I^2T (A^2s)	TOTAL CLEARING I^2T (A^2s) AT RATED VOLTAGE		WATT LOSS AT 100 % RATED CURRENT (W)	AGENCY CERTIFICATION	
	FLUSH END METRIC THREAD	FLUSH END INCHES THREAD		AC		DC	AC	DC		AC	DC		cURus	CCC*
				IEC	UL									
30	PSR030FL0040	PSR030FS0040	40	690	700	600	200 kA	150 kA	76	280	260	12	•	•
	PSR030FL0050	PSR030FS0050	50	690	700	600	200 kA	150 kA	110	598	384	15	•	•
	PSR030FL0063	PSR030FS0063	63	690	700	600	200 kA	150 kA	176	1023	640	20	•	•
	PSR030FL0080	PSR030FS0080	80	690	700	600	200 kA	150 kA	304	1728	1252	24	•	•
	PSR030FL0100	PSR030FS0100	100	690	700	600	200 kA	150 kA	437	2835	1575	27	•	•
	PSR030FL0125	PSR030FS0125	125	690	700	600	200 kA	150 kA	707	4684	2783	36	•	•
	PSR030FL0160	PSR030FS0160	160	690	700	600	200 kA	150 kA	1359	9114	5507	39	•	•
	PSR030FL0200	PSR030FS0200	200	690	700	600	200 kA	150 kA	3012	15169	14700	39	•	•
	PSR030FL0250	PSR030FS0250	250	690	700	600	200 kA	150 kA	4668	29952	20833	50	•	•
	PSR030FL0315	PSR030FS0315	315	690	700	600	200 kA	150 kA	7131	61830	31600	61	•	•
	PSR030FL0350	PSR030FS0350	350	690	700	600	200 kA	150 kA	12007	85320	49273	62	•	•
	PSR030FL0400	PSR030FS0400	400	690	700	600	200 kA	150 kA	16209	114750	63367	75	•	•
	PSR030FL0450	PSR030FS0450	450	690	700	600	200 kA	150 kA	23133	160110	93533	75	•	•
	PSR030FL0500	PSR030FS0500	500	690	700	600	200 kA	150 kA	31429	225180	137333	80	•	•
	PSR030FL0550	PSR030FS0550	550	690	700	600	200 kA	150 kA	44323	268920	145400	78	•	•
	PSR030FL0630	PSR030FS0630	630	690	700	550	200 kA	150 kA	57404	480010	267800	90	•	
31	PSR031FL0200	PSR031FS0200	200	690	700	600	200 kA	150 kA	1965	17334	16188	49	•	•
	PSR031FL0250	PSR031FS0250	250	690	700	600	200 kA	150 kA	3789	35343	21080	52	•	•
	PSR031FL0315	PSR031FS0315	315	690	700	600	200 kA	150 kA	6862	59130	30694	61	•	•
	PSR031FL0350	PSR031FS0350	350	690	700	600	200 kA	150 kA	9523	76140	40996	63	•	•
	PSR031FL0400	PSR031FS0400	400	690	700	600	200 kA	150 kA	14770	124335	64359	64	•	•
	PSR031FL0450	PSR031FS0450	450	690	700	600	200 kA	150 kA	22457	178200	97444	69	•	•
	PSR031FL0500	PSR031FS0500	500	690	700	600	200 kA	150 kA	29751	251505	125935	81	•	•
	PSR031FL0550	PSR031FS0550	550	690	700	600	200 kA	150 kA	42056	289170	171845	77	•	•
	PSR031FL0630	PSR031FS0630	630	690	700	600	200 kA	150 kA	45403	415500	175500	93	•	•
	PSR031FL0700	PSR031FS0700	700	690	700	600	200 kA	150 kA	98187	601425	337260	92	•	•
	PSR031FL0800	PSR031FS0800	800	690	700	600	200 kA	150 kA	137208	848880	502800	106	•	•
	PSR031FL0900	PSR031FS0900	900	550	600	550	200 kA	150 kA	155163	945100	631820	118	•	
32	PSR032FL0400	PSR032FS0400	400	690	700	600	200 kA	150 kA	11104	79650	44533	82	•	•
	PSR032FL0450	PSR032FS0450	450	690	700	600	200 kA	150 kA	15535	116100	65463	88	•	•
	PSR032FL0500	PSR032FS0500	500	690	700	600	200 kA	150 kA	21573	161460	88277	94	•	•
	PSR032FL0550	PSR032FS0550	550	690	700	600	200 kA	150 kA	26327	177660	107960	104	•	•
	PSR032FL0630	PSR032FS0630	630	690	700	600	200 kA	150 kA	34790	234900	156963	110	•	•
	PSR032FL0700	PSR032FS0700	700	690	700	600	200 kA	150 kA	51191	291870	209287	117	•	•
	PSR032FL0800	PSR032FS0800	800	690	700	600	200 kA	150 kA	60125	472770	249000	145	•	•
	PSR032FL0900	PSR032FS0900	900	690	700	600	200 kA	150 kA	107785	764100	404000	145	•	•
	PSR032FL1000	PSR032FS1000	1000	690	700	600	200 kA	150 kA	190102	933120	672333	146	•	•
	PSR032FL1100	PSR032FS1100	1100	690	700	600	200 kA	150 kA	225379	1247400	744000	149	•	•
	PSR032FL1250	PSR032FS1250	1250	550	500**	450**	200 kA	150 kA	336661	1114994	1197000	149	•	
	PSR032FL1400	PSR032FS1400	1400	450	500	450	200 kA	150 kA	551749	1611639	1865400	154	•	
	PSR032FL1500	PSR032FS1500	1500	450	500	450	200 kA	150 kA	673360	2045907	1735500	171	•	
33	PSR033FL0450	PSR033FS0450	450	690	700	600	200 kA	150 kA	13600	106380	58947	99	•	•
	PSR033FL0500	PSR033FS0500	500	690	700	600	200 kA	150 kA	16434	140400	77846	107	•	•
	PSR033FL0550	PSR033FS0550	550	690	700	600	200 kA	150 kA	23314	187650	100461	108	•	•
	PSR033FL0630	PSR033FS0630	630	690	700	600	200 kA	150 kA	38727	285930	142437	113	•	•
	PSR033FL0700	PSR033FS0700	700	690	700	600	200 kA	150 kA	56763	392580	209863	113	•	•
	PSR033FL0800	PSR033FS0800	800	690	700	600	200 kA	150 kA	84691	575505	348500	120	•	•
	PSR033FL0900	PSR033FS0900	900	690	700	600	200 kA	150 kA	122619	740340	451177	122	•	•
	PSR033FL1000	PSR033FS1000	1000	690	700	600	200 kA	150 kA	222350	1170450	787750	124	•	•
	PSR033FL1100	PSR033FS1100	1100	690	700	600	200 kA	150 kA	310824	1568700	821400	127	•	•
	PSR033FL1250	PSR033FS1250	1250	690	700	600	200 kA	150 kA	476902	2403000	1674333	131	•	•
	PSR033FL1400	PSR033FS1400	1400	690	700	500	200 kA	150 kA	583552	2920050	1979750	144	•	•
	PSR033FL1500	PSR033FS1500	1500	600	650	500	200 kA	150 kA	674538	2433200	1996733	163	•	•
	PSR033FL1600	PSR033FS1600	1600	600	650	500	200 kA	150 kA	779948	2942800	2301633	182	•	•
	PSR033FL1800	PSR033FS1800	1800	600	650	500	200 kA	150 kA	952196	3785040	2724180	224	•	•
	PSR033FL2000	PSR033FS2000	2000	550	600	500	200 kA	150 kA	1234315	4131600	3755180	222	•	•
	PSR033FL2250	PSR033FS2250	2250	500	550	450	200 kA	150 kA	1236000	4459651	3859500	299	•	

* CCC Certification only on Flush End Metric Thread Version

** PSR032 1250 A: 600 V Ac/550 V Dc

 © 2023 Littelfuse, Inc.

PSR SERIES HIGH-SPEED SQUARE BODY FUSES

Electrical Characteristics (cont.)

CASE SIZE	CATALOG NUMBER		AMPERE RATING (A)	VOLTAGE RATING (V)			INTERRUPTING RATING		MELTING (PRE-ARC) I^2T (A^2s)	TOTAL CLEARING I^2T (A^2s) AT RATED VOLTAGE		WATT LOSS AT 100 % RATED CURRENT (W)	AGENCY CERTIFICATION	
	FLUSH END METRIC THREAD	FLUSH END INCHES THREAD		AC		DC	AC	DC		AC	DC		cURus	CCC*
				IEC	UL									
70	PSR070FL0050	PSR070FS0050	50	1250	1300	1000	100 kA	150 kA	177	2050	400	21	•	•
	PSR070FL0063	PSR070FS0063	63	1250	1300	1000	100 kA	150 kA	273	3399	900	23	•	•
	PSR070FL0080	PSR070FS0080	80	1250	1300	1000	100 kA	150 kA	583	6732	2200	24	•	•
	PSR070FL0100	PSR070FS0100	100	1250	1300	1000	100 kA	150 kA	974	10996	3750	29	•	•
	PSR070FL0125	PSR070FS0125	125	1250	1300	1000	100 kA	150 kA	1352	13011	5150	43	•	•
	PSR070FL0160	PSR070FS0160	160	1250	1300	1000	100 kA	150 kA	2377	25662	8950	51	•	•
	PSR070FL0200	PSR070FS0200	200	1250	1300	1000	100 kA	150 kA	4177	39087	17267	61	•	•
	PSR070FL0250	PSR070FS0250	250	1250	1300	1000	100 kA	150 kA	8629	89790	36750	71	•	•
	PSR070FL0280	PSR070FS0280	280	1250	1300	1000	100 kA	150 kA	11844	113201	46750	71	•	•
	PSR070FL0315	PSR070FS0315	315	1250	1300	1000	100 kA	150 kA	18162	142051	66833	69	•	•
	PSR070FL0350	PSR070FS0350	350	1250	1200**	900**	100 kA	150 kA	22963	215230	95410	73	•	
	PSR070FL0400	PSR070FS0400	400	1100	1200	900	100 kA	150 kA	37103	283480	154320	71	•	
71	PSR071FL0160	PSR071FS0160	160	1250	1300	1000	100 kA	150 kA	2756	24600	8800	42	•	•
	PSR071FL0200	PSR071FS0200	200	1250	1300	1000	100 kA	150 kA	4918	50307	19050	52	•	•
	PSR071FL0250	PSR071FS0250	250	1250	1300	1000	100 kA	150 kA	10592	104427	43100	54	•	•
	PSR071FL0280	PSR071FS0280	280	1250	1300	1000	100 kA	150 kA	13763	131897	54150	58	•	
	PSR071FL0315	PSR071FS0315	315	1250	1300	1000	100 kA	150 kA	20882	200244	67450	60	•	•
	PSR071FL0350	PSR071FS0350	350	1250	1300	1000	100 kA	150 kA	23301	225500	102500	71	•	•
	PSR071FL0400	PSR071FS0400	400	1250	1300	1000	100 kA	150 kA	43211	374986	185000	69	•	•
	PSR071FL0450	PSR071FS0450	450	1250	1300	1000	100 kA	150 kA	55915	452394	241333	88	•	•
	PSR071FL0500	PSR071FS0500	500	1100	1200	900	100 kA	150 kA	75315	468845	253960	82	•	
	PSR071FL0550	PSR071FS0550	550	1100	1200	900	100 kA	150 kA	87328	693507	332600	90	•	
	PSR071FL0630	PSR071FS0630	630	1000	1100	900	100 kA	150 kA	131240	790862	426550	100	•	
72	PSR072FL0250	PSR072FS0250	250	1250	1300	1000	100 kA	150 kA	7737	72789	28567	63	•	•
	PSR072FL0280	PSR072FS0280	280	1250	1300	1000	100 kA	150 kA	10915	124538	46897	62	•	•
	PSR072FL0315	PSR072FS0315	315	1250	1300	1000	100 kA	150 kA	16187	145140	58867	67	•	•
	PSR072FL0350	PSR072FS0350	350	1250	1300	1000	100 kA	150 kA	18727	160447	69633	80	•	•
	PSR072FL0400	PSR072FS0400	400	1250	1300	1000	100 kA	150 kA	27112	243540	108000	89	•	•
	PSR072FL0450	PSR072FS0450	450	1250	1300	1000	100 kA	150 kA	35927	406413	159133	107	•	•
	PSR072FL0500	PSR072FS0500	500	1250	1300	1000	100 kA	150 kA	50398	425375	216333	115	•	•
	PSR072FL0550	PSR072FS0550	550	1250	1300	1000	100 kA	150 kA	73858	539833	271333	115	•	•
	PSR072FL0630	PSR072FS0630	630	1250	1300	1000	100 kA	150 kA	126126	942180	436000	119	•	•
	PSR072FL0700	PSR072FS0700	700	1100	1200	900***	100 kA	150 kA	228761	1123694	715180	115	•	
	PSR072FL0800	PSR072FS0800	800	1100	1200	900***	100 kA	150 kA	230695	1432388	911650	113	•	
	PSR072FL0900	PSR072FS0900	900	1000	900**	900***	100 kA	150 kA	376641	1309993	1030400	125	•	
	PSR072FL1000	PSR072FS1000	1000	850	900	800***	100 kA	150 kA	455955	1772548	1361500	136	•	
73	PSR073FL0315	PSR073FS0315	315	1250	1300	1000	100 kA	150 kA	10245	106600	38650	88	•	•
	PSR073FL0350	PSR073FS0350	350	1250	1300	1000	100 kA	150 kA	13586	159627	57467	96	•	•
	PSR073FL0400	PSR073FS0400	400	1250	1300	1000	100 kA	150 kA	19797	211273	86800	124	•	•
	PSR073FL0450	PSR073FS0450	450	1250	1300	1000	100 kA	150 kA	29834	279073	114333	122	•	•
	PSR073FL0500	PSR073FS0500	500	1250	1300	1000	100 kA	150 kA	42751	416437	184500	121	•	•
	PSR073FL0550	PSR073FS0550	550	1250	1300	1000	100 kA	150 kA	55513	491713	224500	130	•	•
	PSR073FL0630	PSR073FS0630	630	1250	1300	1000	100 kA	150 kA	94649	804338	377500	136	•	•
	PSR073FL0700	PSR073FS0700	700	1250	1300	1000	100 kA	150 kA	158097	1170960	575667	135	•	•
	PSR073FL0800	PSR073FS0800	800	1250	1300	1000***	100 kA	150 kA	234943	1769880	733460	123	•	
	PSR073FL0900	PSR073FS0900	900	950	1050	800***	100 kA	150 kA	317743	2280547	901779	140	•	
	PSR073FL1000	PSR073FS1000	1000	950	1050	800***	100 kA	150 kA	476221	3910801	1546418	128	•	
	PSR073FL1100	PSR073FS1100	1100	950	1050	800***	100 kA	150 kA	570870	2736600	1699000	166	•	
	PSR073FL1250	PSR073FS1250	1250	900	1000	-	100 kA	-	993924	3091160	-	182	•	
	PSR073FL1400	PSR073FS1400	1400	900	1000	-	100 kA	-	1168091	3627820	-	229	•	

* CCC Certification only on Flush End Metric Thread Version

** PSR070 350 A: 1300 V Ac/1000 V Dc
PSR072 900 A: 1100 V Ac

*** No UL certification for Dc voltage

PSR SERIES HIGH-SPEED SQUARE BODY FUSES

Ordering Information

CASE SIZE	FLUSH END - METRIC THREAD			FLUSH END - INCHES THREAD			BOX QUANTITY PCS/BOX
	CATALOG NUMBER	ORDERING PART NUMBER	UPC	CATALOG NUMBER	ORDERING PART NUMBER	UPC	
30	PSR030FL0040	PSR030FL0040Z	07945820436	PSR030FS0040	PSR030FS0040Z	07945820451	3 pcs/box
	PSR030FL0050	PSR030FL0050Z	07945820437	PSR030FS0050	PSR030FS0050Z	07945820452	3 pcs/box
	PSR030FL0063	PSR030FL0063Z	07945820438	PSR030FS0063	PSR030FS0063Z	07945820453	3 pcs/box
	PSR030FL0080	PSR030FL0080Z	07945820439	PSR030FS0080	PSR030FS0080Z	07945820454	3 pcs/box
	PSR030FL0100	PSR030FL0100Z	07945820440	PSR030FS0100	PSR030FS0100Z	07945820455	3 pcs/box
	PSR030FL0125	PSR030FL0125Z	07945820441	PSR030FS0125	PSR030FS0125Z	07945820456	3 pcs/box
	PSR030FL0160	PSR030FL0160Z	07945820442	PSR030FS0160	PSR030FS0160Z	07945820457	3 pcs/box
	PSR030FL0200	PSR030FL0200Z	07945820443	PSR030FS0200	PSR030FS0200Z	07945820458	3 pcs/box
	PSR030FL0250	PSR030FL0250Z	07945820444	PSR030FS0250	PSR030FS0250Z	07945820459	3 pcs/box
	PSR030FL0315	PSR030FL0315Z	07945820445	PSR030FS0315	PSR030FS0315Z	07945820460	3 pcs/box
	PSR030FL0350	PSR030FL0350Z	07945820446	PSR030FS0350	PSR030FS0350Z	07945820461	3 pcs/box
	PSR030FL0400	PSR030FL0400Z	07945820447	PSR030FS0400	PSR030FS0400Z	07945820462	3 pcs/box
	PSR030FL0450	PSR030FL0450Z	07945820448	PSR030FS0450	PSR030FS0450Z	07945820463	3 pcs/box
	PSR030FL0500	PSR030FL0500Z	07945820449	PSR030FS0500	PSR030FS0500Z	07945820464	3 pcs/box
	PSR030FL0550	PSR030FL0550Z	07945820450	PSR030FS0550	PSR030FS0550Z	07945820465	3 pcs/box
	PSR030FL0630	PSR030FL0630Z	07945827757	PSR030FS0630	PSR030FS0630Z	07945827778	3 pcs/box
31	PSR031FL0200	PSR031FL0200Z	07945820466	PSR031FS0200	PSR031FS0200Z	07945820477	3 pcs/box
	PSR031FL0250	PSR031FL0250Z	07945820467	PSR031FS0250	PSR031FS0250Z	07945820478	3 pcs/box
	PSR031FL0315	PSR031FL0315Z	07945820468	PSR031FS0315	PSR031FS0315Z	07945820479	3 pcs/box
	PSR031FL0350	PSR031FL0350Z	07945820469	PSR031FS0350	PSR031FS0350Z	07945820480	3 pcs/box
	PSR031FL0400	PSR031FL0400Z	07945820470	PSR031FS0400	PSR031FS0400Z	07945820481	3 pcs/box
	PSR031FL0450	PSR031FL0450Z	07945820471	PSR031FS0450	PSR031FS0450Z	07945820482	3 pcs/box
	PSR031FL0500	PSR031FL0500Z	07945820472	PSR031FS0500	PSR031FS0500Z	07945820483	3 pcs/box
	PSR031FL0550	PSR031FL0550Z	07945820473	PSR031FS0550	PSR031FS0550Z	07945820484	3 pcs/box
	PSR031FL0630	PSR031FL0630Z	07945820474	PSR031FS0630	PSR031FS0630Z	07945820485	3 pcs/box
	PSR031FL0700	PSR031FL0700Z	07945820475	PSR031FS0700	PSR031FS0700Z	07945820486	3 pcs/box
	PSR031FL0800	PSR031FL0800Z	07945820476	PSR031FS0800	PSR031FS0800Z	07945820487	3 pcs/box
	PSR031FL0900	PSR031FL0900Z	07945827758	PSR031FS0900	PSR031FS0900Z	07945827779	3 pcs/box
32	PSR032FL0400	PSR032FL0400Z	07945820488	PSR032FS0400	PSR032FS0400Z	07945820498	3 pcs/box
	PSR032FL0450	PSR032FL0450Z	07945820489	PSR032FS0450	PSR032FS0450Z	07945820499	3 pcs/box
	PSR032FL0500	PSR032FL0500Z	07945820490	PSR032FS0500	PSR032FS0500Z	07945820500	3 pcs/box
	PSR032FL0550	PSR032FL0550Z	07945820491	PSR032FS0550	PSR032FS0550Z	07945820501	3 pcs/box
	PSR032FL0630	PSR032FL0630Z	07945820492	PSR032FS0630	PSR032FS0630Z	07945820502	3 pcs/box
	PSR032FL0700	PSR032FL0700Z	07945820493	PSR032FS0700	PSR032FS0700Z	07945820503	3 pcs/box
	PSR032FL0800	PSR032FL0800Z	07945820494	PSR032FS0800	PSR032FS0800Z	07945820504	3 pcs/box
	PSR032FL0900	PSR032FL0900Z	07945820495	PSR032FS0900	PSR032FS0900Z	07945820505	3 pcs/box
	PSR032FL1000	PSR032FL1000Z	07945820496	PSR032FS1000	PSR032FS1000Z	07945820506	3 pcs/box
	PSR032FL1100	PSR032FL1100Z	07945820497	PSR032FS1100	PSR032FS1100Z	07945820507	3 pcs/box
	PSR032FL1250	PSR032FL1250Z	07945827759	PSR032FS1250	PSR032FS1250Z	07945827780	3 pcs/box
	PSR032FL1400	PSR032FL1400Z	07945827760	PSR032FS1400	PSR032FS1400Z	07945827781	3 pcs/box
	PSR032FL1500	PSR032FL1500Z	07945827761	PSR032FS1500	PSR032FS1500Z	07945827782	3 pcs/box
33	PSR033FL0450	PSR033FL0450Z	07945822163	PSR033FS0450	PSR033FS0450Z	07945822164	3 pcs/box
	PSR033FL0500	PSR033FL0500Z	07945820508	PSR033FS0500	PSR033FS0500Z	07945820522	3 pcs/box
	PSR033FL0550	PSR033FL0550Z	07945820509	PSR033FS0550	PSR033FS0550Z	07945820523	3 pcs/box
	PSR033FL0630	PSR033FL0630Z	07945820510	PSR033FS0630	PSR033FS0630Z	07945820524	3 pcs/box
	PSR033FL0700	PSR033FL0700Z	07945820511	PSR033FS0700	PSR033FS0700Z	07945820525	3 pcs/box
	PSR033FL0800	PSR033FL0800Z	07945820512	PSR033FS0800	PSR033FS0800Z	07945820526	3 pcs/box
	PSR033FL0900	PSR033FL0900Z	07945820513	PSR033FS0900	PSR033FS0900Z	07945820527	3 pcs/box
	PSR033FL1000	PSR033FL1000Z	07945820514	PSR033FS1000	PSR033FS1000Z	07945820528	3 pcs/box
	PSR033FL1100	PSR033FL1100Z	07945820515	PSR033FS1100	PSR033FS1100Z	07945820529	3 pcs/box
	PSR033FL1250	PSR033FL1250Z	07945820516	PSR033FS1250	PSR033FS1250Z	07945820530	3 pcs/box
	PSR033FL1400	PSR033FL1400Z	07945820517	PSR033FS1400	PSR033FS1400Z	07945820531	3 pcs/box
	PSR033FL1500	PSR033FL1500Z	07945820518	PSR033FS1500	PSR033FS1500Z	07945820532	3 pcs/box
	PSR033FL1600	PSR033FL1600Z	07945820519	PSR033FS1600	PSR033FS1600Z	07945820533	3 pcs/box
	PSR033FL1800	PSR033FL1800Z	07945820520	PSR033FS1800	PSR033FS1800Z	07945820534	3 pcs/box
	PSR033FL2000	PSR033FL2000Z	07945820521	PSR033FS2000	PSR033FS2000Z	07945820535	3 pcs/box
	PSR033FL2250	PSR033FL2250Z	07945827762	PSR033FS2250	PSR033FS2250Z	07945827783	3 pcs/box

© 2023 Littelfuse, Inc.

PSR SERIES HIGH-SPEED SQUARE BODY FUSES

Ordering Information (cont.)

CASE SIZE	FLUSH END - METRIC THREAD			FLUSH END - INCHES THREAD			BOX QUANTITY PCS/BOX
	CATALOG NUMBER	ORDERING PART NUMBER	UPC	CATALOG NUMBER	ORDERING PART NUMBER	UPC	
70	PSR070FL0050	PSR070FL0050Z	07945820536	PSR070FS0050	PSR070FS0050Z	07945820546	2 pcs/box
	PSR070FL0063	PSR070FL0063Z	07945820537	PSR070FS0063	PSR070FS0063Z	07945820547	2 pcs/box
	PSR070FL0080	PSR070FL0080Z	07945820538	PSR070FS0080	PSR070FS0080Z	07945820548	2 pcs/box
	PSR070FL0100	PSR070FL0100Z	07945820539	PSR070FS0100	PSR070FS0100Z	07945820549	2 pcs/box
	PSR070FL0125	PSR070FL0125Z	07945820540	PSR070FS0125	PSR070FS0125Z	07945820550	2 pcs/box
	PSR070FL0160	PSR070FL0160Z	07945820541	PSR070FS0160	PSR070FS0160Z	07945820551	2 pcs/box
	PSR070FL0200	PSR070FL0200Z	07945820542	PSR070FS0200	PSR070FS0200Z	07945820552	2 pcs/box
	PSR070FL0250	PSR070FL0250Z	07945820543	PSR070FS0250	PSR070FS0250Z	07945820553	2 pcs/box
	PSR070FL0280	PSR070FL0280Z	07945820544	PSR070FS0280	PSR070FS0280Z	07945820554	2 pcs/box
	PSR070FL0315	PSR070FL0315Z	07945820545	PSR070FS0315	PSR070FS0315Z	07945820555	2 pcs/box
	PSR070FL0350	PSR070FL0350Z	07945827763	PSR070FS0350	PSR070FS0350Z	07945827784	2 pcs/box
	PSR070FL0400	PSR070FL0400Z	07945827764	PSR070FS0400	PSR070FS0400Z	07945827785	2 pcs/box
71	PSR071FL0160	PSR071FL0160Z	07945820556	PSR071FS0160	PSR071FS0160Z	07945820564	2 pcs/box
	PSR071FL0200	PSR071FL0200Z	07945820557	PSR071FS0200	PSR071FS0200Z	07945820565	2 pcs/box
	PSR071FL0250	PSR071FL0250Z	07945820558	PSR071FS0250	PSR071FS0250Z	07945820566	2 pcs/box
	PSR071FL0280	PSR071FL0280Z	07945820573	PSR071FS0280	PSR071FS0280Z	07945820582	2 pcs/box
	PSR071FL0315	PSR071FL0315Z	07945820560	PSR071FS0315	PSR071FS0315Z	07945820568	2 pcs/box
	PSR071FL0350	PSR071FL0350Z	07945820561	PSR071FS0350	PSR071FS0350Z	07945820569	2 pcs/box
	PSR071FL0400	PSR071FL0400Z	07945820562	PSR071FS0400	PSR071FS0400Z	07945820570	2 pcs/box
	PSR071FL0450	PSR071FL0450Z	07945820563	PSR071FS0450	PSR071FS0450Z	07945820571	2 pcs/box
	PSR071FL0500	PSR071FL0500Z	07945827765	PSR071FS0500	PSR071FS0500Z	07945827786	2 pcs/box
	PSR071FL0550	PSR071FL0550Z	07945827766	PSR071FS0550	PSR071FS0550Z	07945827787	2 pcs/box
	PSR071FL0630	PSR071FL0630Z	07945827767	PSR071FS0630	PSR071FS0630Z	07945827788	2 pcs/box
72	PSR072FL0250	PSR072FL0250Z	07945820572	PSR072FS0250	PSR072FS0250Z	07945820581	2 pcs/box
	PSR072FL0280	PSR072FL0280Z	07945820573	PSR072FS0280	PSR072FS0280Z	07945820582	2 pcs/box
	PSR072FL0315	PSR072FL0315Z	07945820574	PSR072FS0315	PSR072FS0315Z	07945820583	2 pcs/box
	PSR072FL0350	PSR072FL0350Z	07945820575	PSR072FS0350	PSR072FS0350Z	07945820584	2 pcs/box
	PSR072FL0400	PSR072FL0400Z	07945820576	PSR072FS0400	PSR072FS0400Z	07945820585	2 pcs/box
	PSR072FL0450	PSR072FL0450Z	07945820577	PSR072FS0450	PSR072FS0450Z	07945820586	2 pcs/box
	PSR072FL0500	PSR072FL0500Z	07945820578	PSR072FS0500	PSR072FS0500Z	07945820587	2 pcs/box
	PSR072FL0550	PSR072FL0550Z	07945820579	PSR072FS0550	PSR072FS0550Z	07945820588	2 pcs/box
	PSR072FL0630	PSR072FL0630Z	07945820580	PSR072FS0630	PSR072FS0630Z	07945820589	2 pcs/box
	PSR072FL0700	PSR072FL0700Z	07945827768	PSR072FS0700	PSR072FS0700Z	07945827789	2 pcs/box
	PSR072FL0800	PSR072FL0800Z	07945827769	PSR072FS0800	PSR072FS0800Z	07945827790	2 pcs/box
	PSR072FL0900	PSR072FL0900Z	07945827770	PSR072FS0900	PSR072FS0900Z	07945827793	2 pcs/box
	PSR072FL1000	PSR072FL1000Z	07945827771	PSR072FS1000	PSR072FS1000Z	07945827794	2 pcs/box
73	PSR073FL0315	PSR073FL0315Z	07945820590	PSR073FS0315	PSR073FS0315Z	07945820602	2 pcs/box
	PSR073FL0350	PSR073FL0350Z	07945820591	PSR073FS0350	PSR073FS0350Z	07945820603	2 pcs/box
	PSR073FL0400	PSR073FL0400Z	07945820592	PSR073FS0400	PSR073FS0400Z	07945820604	2 pcs/box
	PSR073FL0450	PSR073FL0450Z	07945820593	PSR073FS0450	PSR073FS0450Z	07945820605	2 pcs/box
	PSR073FL0500	PSR073FL0500Z	07945820594	PSR073FS0500	PSR073FS0500Z	07945820606	2 pcs/box
	PSR073FL0550	PSR073FL0550Z	07945820595	PSR073FS0550	PSR073FS0550Z	07945820607	2 pcs/box
	PSR073FL0630	PSR073FL0630Z	07945820596	PSR073FS0630	PSR073FS0630Z	07945820608	2 pcs/box
	PSR073FL0700	PSR073FL0700Z	07945820597	PSR073FS0700	PSR073FS0700Z	07945820609	2 pcs/box
	PSR073FL0800	PSR073FL0800Z	07945827772	PSR073FS0800	PSR073FS0800Z	07945827795	2 pcs/box
	PSR073FL0900	PSR073FL0900Z	07945827773	PSR073FS0900	PSR073FS0900Z	07945827796	2 pcs/box
	PSR073FL1000	PSR073FL1000Z	07945827774	PSR073FS1000	PSR073FS1000Z	07945827797	2 pcs/box
	PSR073FL1100	PSR073FL1100Z	07945827775	PSR073FS1100	PSR073FS1100Z	07945827798	2 pcs/box
	PSR073FL1250	PSR073FL1250Z	07945827776	PSR073FS1250	PSR073FS1250Z	07945827799	2 pcs/box
	PSR073FL1400	PSR073FL1400Z	07945827777	PSR073FS1400	PSR073FS1400Z	07945827800	2 pcs/box

© 2023 Littelfuse, Inc.

PSR SERIES HIGH-SPEED SQUARE BODY FUSES

Dimensions

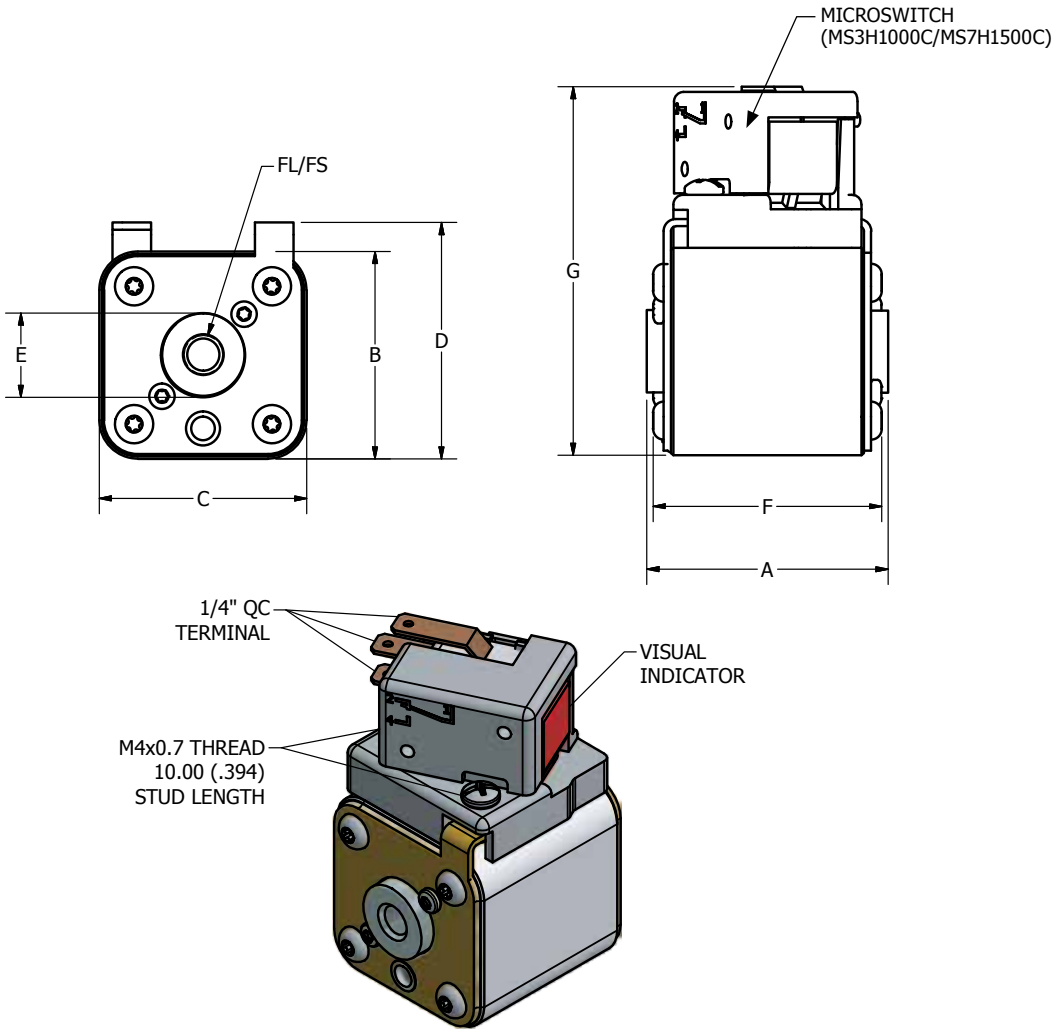

DIMENSIONS IN MM (IN)										
CASE SIZE	A	B	C	D	E	F	G	FL METRIC THREAD	FS INCHES THREAD	RECOMMENDED TORQUE
30	50.0 (1.97)	43.0 (1.69)	43.0 (1.69)	49.0 (1.93)	17.0 (0.7)	47.7 (1.88)	77.9 (3.07)	M8 x 1.25	5/16"–18 UNC 2B	13–20 Nm
31	50.0 (1.97)	51.5 (2.03)	51.5 (2.03)	57.5 (2.26)	20.0 (0.8)	48.5 (1.91)	86.4 (3.40)	M8 x 1.25	5/16"–18 UNC 2B	13–20 Nm
32	51.0 (2.01)	60.0 (2.36)	60.0 (2.36)	66.0 (2.60)	23.0 (0.9)	49.2 (1.94)	94.9 (3.74)	M10 x 1.5	3/8"–16 UNC 2B	26–35 Nm
33	51.0 (2.01)	73.5 (2.89)	73.5 (2.89)	79.5 (3.13)	30.0 (1.2)	49.5 (1.95)	108.4 (4.27)	M12 x 1.75	½"–13 UNC 2B	45–55 Nm
70	74.0 (2.91)	43.0 (1.69)	43.0 (1.69)	49.0 (1.93)	17.0 (0.7)	71.7 (2.82)	77.9 (3.07)	M8 x 1.25	5/16"–18 UNC 2B	13–20 Nm
71	74.0 (2.91)	51.5 (2.03)	51.5 (2.03)	57.5 (2.26)	20.0 (0.8)	72.5 (2.85)	86.4 (3.40)	M8 x 1.25	5/16"–18 UNC 2B	13–20 Nm
72	75.0 (2.95)	60.0 (2.36)	60.0 (2.36)	66.0 (2.60)	23.0 (0.9)	73.2 (2.88)	94.9 (3.736)	M10 x 1.5	3/8"–16 UNC 2B	26–35 Nm
73	75.0 (2.95)	73.5 (2.89)	73.5 (2.89)	79.5 (3.13)	30.0 (1.2)	73.5 (2.89)	108.4 (4.27)	M12 x 1.75	½"–13 UNC 2B	45–55 Nm

© 2023 Littelfuse, Inc.

PSR SERIES HIGH-SPEED SQUARE BODY BOLTED BLADE

Semiconductor Fuses • Bolted Blade • 40 A—2250 A



Description

Littelfuse PSR series high-speed square body fuses are specially designed for protection of power semiconductor devices such as diodes, triacs, IGBTs, SCRs, MOSFETs, and other solid-state devices that are typically designed into power conversion and power conditioning equipment. Variable frequency drives, inverters, UPS, rectifiers, and soft-starters are examples of typical equipment designed with sensitive power semiconductor devices that cannot withstand any line surge or overcurrent conditions and require high-speed protection.

The PSR series with bolted blades is designed and tested to IEC 60269-4.

Littelfuse POWR-*SPEED*® PSR series products offer optimized circuit protection at the extremely fast speed required to protect modern day power conversion devices. Available in bolted blade style termination (typical in North American market) with visual blown fuse indication standard on all fuses and optional micro-switch for external indication.

Features/Benefits

- Best in class dc performance
- Extremely current limiting
- Superior cycling capability
- Visual and optional microswitch fuse blown indication
- Low watt-loss design
- Compliance with US and Canadian requirements
- Fast-acting Class aR performance

Applications

- Power conversion devices (UPS, inverter, rectifiers, drives)
- Dc systems (dc common bus, dc injection braking)
- Battery protection application (energy storage systems)
- Electric vehicle charging stations
- Heaters and power supplies

Specifications

Voltage Rating	Ac: 450 V–1300 V Dc: 450 V–1000 V
Amperage Rating	40 A–2250 A
Interrupting Rating	Ac: 100 kA–200 kA Dc: 150 kA
Time Constant	10 ms at IR
Microswitch	Yes
Mounting	Bolted blade style
Material	Body: ceramic Contacts: plated copper
Approvals	cURus Recognized (File: E71611)
Applicable Standards	UL 248-13 IEC 60269-4 (Class aR)
Environmental	RoHS Compliant, REACH
Operating Temperature	-55 °C to +125 °C
Storage Temperature	Up to +35 °C with relative humidity <65 %
Country of Origin	Mexico

Ordering Part Number

PSR 030 US 0550 Z

- **Series**
- **Case Size**: 30, 31, 32, 33, 70, 71, 72, 73
- **Termination**: US = bolted short blade; UL = bolted long blade
- **Amperage**
- **Packing Quantity**: X = (1 pc/box); Z = (3 pcs/box)

Catalog Number

SERIES	CASE SIZE	TERMINATION	AMPERAGE	CATALOG NUMBER	ORDERING PART NUMBER
PSR	030	US	0550	PSR030US0550	PSR030US0550Z

Recommended Accessories

Microswitch: MS3H1000C (Case Size 30 to 33)
MS7H1500C (Case Size 70 to 73)

Web Resources

Download technical documents: **Littelfuse.com/PSR**

Note: high-speed fuses are designed for fixed installations. They are not intended for use in moving vehicle applications.

© 2023 Littelfuse, Inc.

PSR SERIES HIGH-SPEED SQUARE BODY BOLTED BLADE

Electrical Characteristics

CASE SIZE	CATALOG NUMBER		AMPERE RATING (A)	VOLTAGE RATING (V)			INTERRUPTING RATING		MELTING (PRE-ARC) I^2T (A^2S)	TOTAL CLEARING I^2T (A^2S) AT RATED VOLTAGE		WATT LOSS AT 100 % RATED CURRENT (W)	AGENCY CERTIFICATION
	BOLTED SHORT BLADE (US)	BOLTED LONG BLADE (UL)		AC		DC	AC	DC		AC	DC		cURus
				IEC	UL								
30	PSR030US0040	PSR030UL0040	40	690	700	600	200 kA	150 kA	76	280	260	13	•
	PSR030US0050	PSR030UL0050	50	690	700	600	200 kA	150 kA	110	598	384	16	•
	PSR030US0063	PSR030UL0063	63	690	700	600	200 kA	150 kA	176	1023	640	20	•
	PSR030US0080	PSR030UL0080	80	690	700	600	200 kA	150 kA	304	1728	1252	24	•
	PSR030US0100	PSR030UL0100	100	690	700	600	200 kA	150 kA	437	2835	1575	28	•
	PSR030US0125	PSR030UL0125	125	690	700	600	200 kA	150 kA	707	4684	2783	37	•
	PSR030US0160	PSR030UL0160	160	690	700	600	200 kA	150 kA	1359	9114	5507	40	•
	PSR030US0200	PSR030UL0200	200	690	700	600	200 kA	150 kA	3012	15169	14700	40	•
	PSR030US0250	PSR030UL0250	250	690	700	600	200 kA	150 kA	4668	29952	20833	52	•
	PSR030US0315	PSR030UL0315	315	690	700	600	200 kA	150 kA	7131	61830	31600	64	•
	PSR030US0350	PSR030UL0350	350	690	700	600	200 kA	150 kA	12007	85320	49273	66	•
	PSR030US0400	PSR030UL0400	400	690	700	600	200 kA	150 kA	16209	114750	63367	78	•
	PSR030US0450	PSR030UL0450	450	690	700	600	200 kA	150 kA	23133	160110	93533	80	•
	PSR030US0500	PSR030UL0500	500	690	700	600	200 kA	150 kA	31429	225180	137333	84	•
	PSR030US0550	PSR030UL0550	550	690	700	600	200 kA	150 kA	44323	268920	145400	85	•
	PSR030US0630	PSR030UL0630	630	690	700	550	200 kA	150 kA	57404	480010	267800	91	•
31	PSR031US0200	PSR031UL0200	200	690	700	600	200 kA	150 kA	1965	17334	16188	49	•
	PSR031US0250	PSR031UL0250	250	690	700	600	200 kA	150 kA	3789	35343	21080	52	•
	PSR031US0315	PSR031UL0315	315	690	700	600	200 kA	150 kA	6862	59130	30694	63	•
	PSR031US0350	PSR031UL0350	350	690	700	600	200 kA	150 kA	9523	76140	40996	67	•
	PSR031US0400	PSR031UL0400	400	690	700	600	200 kA	150 kA	14770	124335	64359	70	•
	PSR031US0450	PSR031UL0450	450	690	700	600	200 kA	150 kA	22457	178200	97444	70	•
	PSR031US0500	PSR031UL0500	500	690	700	600	200 kA	150 kA	29751	251505	125935	74	•
	PSR031US0550	PSR031UL0550	550	690	700	600	200 kA	150 kA	42056	289170	171845	86	•
	PSR031US0630	PSR031UL0630	630	690	700	600	200 kA	150 kA	73513	507465	276315	87	•
	PSR031US0700	PSR031UL0700	700	690	700	600	200 kA	150 kA	98187	601425	337260	93	•
	PSR031US0800	PSR031UL0800	800	690	700	600	200 kA	150 kA	137208	848880	502815	107	•
	PSR031US0900	PSR031UL0900	900	550	600	550	200 kA	150 kA	155163	945100	631820	126	•
32	PSR032US0400	PSR032UL0400	400	690	700	600	200 kA	150 kA	11104	79650	44533	87	•
	PSR032US0450	PSR032UL0450	450	690	700	600	200 kA	150 kA	15535	116100	65463	88	•
	PSR032US0500	PSR032UL0500	500	690	700	600	200 kA	150 kA	21573	161460	88277	94	•
	PSR032US0550	PSR032UL0550	550	690	700	600	200 kA	150 kA	26327	177660	107960	106	•
	PSR032US0630	PSR032UL0630	630	690	700	600	200 kA	150 kA	34790	234900	156963	114	•
	PSR032US0700	PSR032UL0700	700	690	700	600	200 kA	150 kA	51191	291870	209287	127	•
	PSR032US0800	PSR032UL0800	800	690	700	600	200 kA	150 kA	60125	472770	249000	152	•
	PSR032US0900	PSR032UL0900	900	690	700	600	200 kA	150 kA	107785	764100	404000	145	•
	PSR032US1000	PSR032UL1000	1000	690	700	600	200 kA	150 kA	190102	933120	672333	149	•
	PSR032US1100	PSR032UL1100	1100	690	700	600	200 kA	150 kA	225379	1247400	744000	161	•
	PSR032US1250	PSR032UL1250	1250	550	500*	450*	200 kA	150 kA	336661	1114994	1197000	166	•
	PSR032US1400	PSR032UL1400	1400	450	500	450	200 kA	150 kA	551749	1611639	1865400	184	•
	PSR032US1500	PSR032UL1500	1500	450	500	450	200 kA	150 kA	673360	2045907	1735500	192	•
33	PSR033US0450	PSR033UL0450	450	690	700	600	200 kA	150 kA	13600	106380	58947	107	•
	PSR033US0500	PSR033UL0500	500	690	700	600	200 kA	150 kA	16434	140400	77846	107	•
	PSR033US0550	PSR033UL0550	550	690	700	600	200 kA	150 kA	23314	187650	100461	111	•
	PSR033US0630	PSR033UL0630	630	690	700	600	200 kA	150 kA	38727	285930	142437	120	•
	PSR033US0700	PSR033UL0700	700	690	700	600	200 kA	150 kA	56763	392580	209863	116	•
	PSR033US0800	PSR033UL0800	800	690	700	600	200 kA	150 kA	84691	575505	348500	122	•
	PSR033US0900	PSR033UL0900	900	690	700	600	200 kA	150 kA	122619	740340	451177	138	•
	PSR033US1000	PSR033UL1000	1000	690	700	600	200 kA	150 kA	222350	1170450	787750	138	•
	PSR033US1100	PSR033UL1100	1100	690	700	600	200 kA	150 kA	310824	1568700	821400	138	•
	PSR033US1250	PSR033UL1250	1250	690	700	500	200 kA	150 kA	476902	2403000	1674333	145	•
	PSR033US1400	PSR033UL1400	1400	690	700	500	200 kA	150 kA	583552	2920050	1979750	173	•
	PSR033US1500	PSR033UL1500	1500	600	650	500	200 kA	150 kA	674538	2433200	1996733	182	•
	PSR033US1600	PSR033UL1600	1600	600	650	500	200 kA	150 kA	779948	2942800	2301633	208	•
	PSR033US1800	PSR033UL1800	1800	600	650	500	200 kA	150 kA	952196	3785040	2724180	260	•
	PSR033US2000	PSR033UL2000	2000	550	600	480	200 kA	150 kA	1234315	4131600	3755180	264	•
	PSR033US2250	PSR033UL2250	2250	500	550	450	200 kA	150 kA	1236000	4459651	3859500	349	•

* PSR032 1250 A: 600 V Ac/550 V Dc

© 2023 Littelfuse, Inc.

PSR SERIES HIGH-SPEED SQUARE BODY BOLTED BLADE

Electrical Characteristics (cont.)

CASE SIZE	CATALOG NUMBER	AMPERE RATING (A)	VOLTAGE RATING (V)			INTERRUPTING RATING		MELTING (PRE-ARC) I^2T (A^2S)	TOTAL CLEARING I^2T (A^2S) AT RATED VOLTAGE		WATT LOSS AT 100 % RATED CURRENT (W)	AGENCY CERTIFICATION
	BOLTED LONG BLADE (UL)		AC		DC	AC	DC		AC	DC		cURus
			IEC	UL								
70	PSR070UL0050	50	1250	1300	1000	100 kA	150 kA	177	2050	400	21	•
	PSR070UL0063	63	1250	1300	1000	100 kA	150 kA	273	3399	900	24	•
	PSR070UL0080	80	1250	1300	1000	100 kA	150 kA	583	6732	2200	25	•
	PSR070UL0100	100	1250	1300	1000	100 kA	150 kA	974	10996	3750	30	•
	PSR070UL0125	125	1250	1300	1000	100 kA	150 kA	1352	13011	5150	44	•
	PSR070UL0160	160	1250	1300	1000	100 kA	150 kA	2377	25662	8950	53	•
	PSR070UL0200	200	1250	1300	1000	100 kA	150 kA	4177	39087	17267	62	•
	PSR070UL0250	250	1250	1300	1000	100 kA	150 kA	8629	89790	36750	73	•
	PSR070UL0280	280	1250	1300	1000	100 kA	150 kA	11844	113201	46750	77	•
	PSR070UL0315	315	1250	1300	1000	100 kA	150 kA	18162	142051	66833	80	•
	PSR070UL0350	350	1250	1200*	900*	100 kA	150 kA	22963	215230	95410	76	•
	PSR070UL0400	400	1100	1200	900	100 kA	150 kA	37103	283480	154320	78	•
71	PSR071UL0160	160	1250	1300	1000	100 kA	150 kA	2756	24600	8800	45	•
	PSR071UL0200	200	1250	1300	1000	100 kA	150 kA	4918	50307	19050	52	•
	PSR071UL0250	250	1250	1300	1000	100 kA	150 kA	10592	104427	43100	55	•
	PSR071UL0280	280	1250	1300	1000	100 kA	150 kA	13763	131897	54150	58	•
	PSR071UL0315	315	1250	1300	1000	100 kA	150 kA	20882	200244	67450	59	•
	PSR071UL0350	350	1250	1300	1000	100 kA	150 kA	23301	225500	102500	70	•
	PSR071UL0400	400	1250	1300	1000	100 kA	150 kA	43211	374986	185000	76	•
	PSR071UL0450	450	1250	1300	1000	100 kA	150 kA	55915	452394	241333	88	•
	PSR071UL0500	500	1100	1200	900	100 kA	150 kA	75315	468845	253960	93	•
	PSR071UL0550	550	1100	1200	900	100 kA	150 kA	87328	693507	332600	90	•
	PSR071UL0630	630	1000	1100	900	100 kA	150 kA	131240	790862	426550	103	•
72	PSR072UL0250	250	1250	1300	1000	100 kA	150 kA	7737	72789	28567	64	•
	PSR072UL0280	280	1250	1300	1000	100 kA	150 kA	10915	124538	46897	62	•
	PSR072UL0315	315	1250	1300	1000	100 kA	150 kA	16187	145140	58867	69	•
	PSR072UL0350	350	1250	1300	1000	100 kA	150 kA	18727	160447	69633	81	•
	PSR072UL0400	400	1250	1300	1000	100 kA	150 kA	27112	243540	108000	93	•
	PSR072UL0450	450	1250	1300	1000	100 kA	150 kA	35927	406413	159133	107	•
	PSR072UL0500	500	1250	1300	1000	100 kA	150 kA	50398	425375	216333	115	•
	PSR072UL0550	550	1250	1300	1000	100 kA	150 kA	73858	539833	271333	115	•
	PSR072UL0630	630	1250	1300	1000	100 kA	150 kA	126126	942180	436000	119	•
	PSR072UL0700	700	1100	1200	900**	100 kA	150 kA	228761	1123694	715180	89	•
	PSR072UL0800	800	1100	1200	900**	100 kA	150 kA	230695	1432388	911650	129	•
	PSR072UL0900	900	1000	900*	900**	100 kA	150 kA	376641	1309993	1030400	131	•
	PSR072UL1000	1000	850	900	800**	100 kA	150 kA	455955	1772548	1361500	156	•
73	PSR073UL0315	315	1250	1300	1000	100 kA	150 kA	10245	106600	38650	100	•
	PSR073UL0350	350	1250	1300	1000	100 kA	150 kA	13586	159627	57467	100	•
	PSR073UL0400	400	1250	1300	1000	100 kA	150 kA	19797	211273	86800	124	•
	PSR073UL0450	450	1250	1300	1000	100 kA	150 kA	29834	279073	114333	122	•
	PSR073UL0500	500	1250	1300	1000	100 kA	150 kA	42751	416437	184500	121	•
	PSR073UL0550	550	1250	1300	1000	100 kA	150 kA	55513	491713	224500	130	•
	PSR073UL0630	630	1250	1300	1000	100 kA	150 kA	94649	804338	377500	136	•
	PSR073UL0700	700	1250	1300	1000	100 kA	150 kA	158097	1170960	575667	135	•
	PSR073UL0800	800	1250	1300	1000**	100 kA	150 kA	234943	1769880	733460	128	•
	PSR073UL0900	900	950	1050	800**	100 kA	150 kA	317743	2280547	901779	156	•
	PSR073UL1000	1000	950	1050	800**	100 kA	150 kA	476221	3910801	1546418	143	•
	PSR073UL1100	1100	950	1050	800**	100 kA	150 kA	570870	2736600	1699000	165	•
	PSR073UL1250	1250	900	1000	-	100 kA	-	993924	3091160	-	197	•
	PSR073UL1400	1400	900	1000	-	100 kA	-	1168091	3627820	-	249	•

* PSR070 350 A: 1300 V Ac/1000 V Dc
PSR072 900 A: 1100 V Ac

** No UL certification for Dc voltage

© 2023 Littelfuse, Inc.

PSR SERIES HIGH-SPEED SQUARE BODY BOLTED BLADE

Ordering Information

CASE SIZE	BOLTED SHORT BLADE (US)			BOLTED LONG BLADE (UL)			BOX QUANTITY
	CATALOG NUMBER	ORDERING PART NUMBER	UPC	CATALOG NUMBER	ORDERING PART NUMBER	UPC	
30	PSR030US0040	PSR030US0040Z	07945825195	PSR030UL0040	PSR030UL0040Z	07945825246	3 pcs/box
	PSR030US0050	PSR030US0050Z	07945825196	PSR030UL0050	PSR030UL0050Z	07945825247	3 pcs/box
	PSR030US0063	PSR030US0063Z	07945825197	PSR030UL0063	PSR030UL0063Z	07945825248	3 pcs/box
	PSR030US0080	PSR030US0080Z	07945825198	PSR030UL0080	PSR030UL0080Z	07945825249	3 pcs/box
	PSR030US0100	PSR030US0100Z	07945825199	PSR030UL0100	PSR030UL0100Z	07945825250	3 pcs/box
	PSR030US0125	PSR030US0125Z	07945825200	PSR030UL0125	PSR030UL0125Z	07945825251	3 pcs/box
	PSR030US0160	PSR030US0160Z	07945825201	PSR030UL0160	PSR030UL0160Z	07945825252	3 pcs/box
	PSR030US0200	PSR030US0200Z	07945825202	PSR030UL0200	PSR030UL0200Z	07945825253	3 pcs/box
	PSR030US0250	PSR030US0250Z	07945825203	PSR030UL0250	PSR030UL0250Z	07945825254	3 pcs/box
	PSR030US0315	PSR030US0315Z	07945825204	PSR030UL0315	PSR030UL0315Z	07945825255	3 pcs/box
	PSR030US0350	PSR030US0350Z	07945825205	PSR030UL0350	PSR030UL0350Z	07945825256	3 pcs/box
	PSR030US0400	PSR030US0400Z	07945825206	PSR030UL0400	PSR030UL0400Z	07945825257	3 pcs/box
	PSR030US0450	PSR030US0450Z	07945825207	PSR030UL0450	PSR030UL0450Z	07945825258	3 pcs/box
	PSR030US0500	PSR030US0500Z	07945825208	PSR030UL0500	PSR030UL0500Z	07945825259	3 pcs/box
	PSR030US0550	PSR030US0550Z	07945825209	PSR030UL0550	PSR030UL0550Z	07945825260	3 pcs/box
	PSR030US0630	PSR030US0630Z	07945828549	PSR030UL0630	PSR030UL0630Z	07945827828	3 pcs/box
31	PSR031US0200	PSR031US0200Z	07945825210	PSR031UL0200	PSR031UL0200Z	07945825261	3 pcs/box
	PSR031US0250	PSR031US0250Z	07945825211	PSR031UL0250	PSR031UL0250Z	07945825262	3 pcs/box
	PSR031US0315	PSR031US0315Z	07945825212	PSR031UL0315	PSR031UL0315Z	07945825263	3 pcs/box
	PSR031US0350	PSR031US0350Z	07945825213	PSR031UL0350	PSR031UL0350Z	07945825264	3 pcs/box
	PSR031US0400	PSR031US0400Z	07945825214	PSR031UL0400	PSR031UL0400Z	07945825265	3 pcs/box
	PSR031US0450	PSR031US0450Z	07945825215	PSR031UL0450	PSR031UL0450Z	07945825266	3 pcs/box
	PSR031US0500	PSR031US0500Z	07945825216	PSR031UL0500	PSR031UL0500Z	07945825267	3 pcs/box
	PSR031US0550	PSR031US0550Z	07945825217	PSR031UL0550	PSR031UL0550Z	07945825268	3 pcs/box
	PSR031US0630	PSR031US0630Z	07945825218	PSR031UL0630	PSR031UL0630Z	07945825269	3 pcs/box
	PSR031US0700	PSR031US0700Z	07945825219	PSR031UL0700	PSR031UL0700Z	07945825270	3 pcs/box
	PSR031US0800	PSR031US0800Z	07945825220	PSR031UL0800	PSR031UL0800Z	07945825271	3 pcs/box
	PSR031US0900	PSR031US0900Z	07945828550	PSR031UL0900	PSR031UL0900Z	07945827829	3 pcs/box
32	PSR032US0400	PSR032US0400X	07945825221	PSR032UL0400	PSR032UL0400X	07945825272	1 pc/box
	PSR032US0450	PSR032US0450X	07945825222	PSR032UL0450	PSR032UL0450X	07945825273	1 pc/box
	PSR032US0500	PSR032US0500X	07945825223	PSR032UL0500	PSR032UL0500X	07945825274	1 pc/box
	PSR032US0550	PSR032US0550X	07945825224	PSR032UL0550	PSR032UL0550X	07945825275	1 pc/box
	PSR032US0630	PSR032US0630X	07945825225	PSR032UL0630	PSR032UL0630X	07945825276	1 pc/box
	PSR032US0700	PSR032US0700X	07945825226	PSR032UL0700	PSR032UL0700X	07945825277	1 pc/box
	PSR032US0800	PSR032US0800X	07945825227	PSR032UL0800	PSR032UL0800X	07945825278	1 pc/box
	PSR032US0900	PSR032US0900X	07945825228	PSR032UL0900	PSR032UL0900X	07945825279	1 pc/box
	PSR032US1000	PSR032US1000X	07945825229	PSR032UL1000	PSR032UL1000X	07945825280	1 pc/box
	PSR032US1100	PSR032US1100X	07945825230	PSR032UL1100	PSR032UL1100X	07945825281	1 pc/box
	PSR032US1250	PSR032US1250X	07945828551	PSR032UL1250	PSR032UL1250X	07945827830	1 pc/box
	PSR032US1400	PSR032US1400X	07945828552	PSR032UL1400	PSR032UL1400X	07945828531	1 pc/box
	PSR032US1500	PSR032US1500X	07945828553	PSR032UL1500	PSR032UL1500X	07945828532	1 pc/box
33	PSR033US0450	PSR033US0450X	07945825231	PSR033UL0450	PSR033UL0450X	07945825282	1 pc/box
	PSR033US0500	PSR033US0500X	07945825232	PSR033UL0500	PSR033UL0500X	07945825283	1 pc/box
	PSR033US0550	PSR033US0550X	07945825233	PSR033UL0550	PSR033UL0550X	07945825284	1 pc/box
	PSR033US0630	PSR033US0630X	07945825234	PSR033UL0630	PSR033UL0630X	07945825285	1 pc/box
	PSR033US0700	PSR033US0700X	07945825235	PSR033UL0700	PSR033UL0700X	07945825286	1 pc/box
	PSR033US0800	PSR033US0800X	07945825236	PSR033UL0800	PSR033UL0800X	07945825287	1 pc/box
	PSR033US0900	PSR033US0900X	07945825237	PSR033UL0900	PSR033UL0900X	07945825288	1 pc/box
	PSR033US1000	PSR033US1000X	07945825238	PSR033UL1000	PSR033UL1000X	07945825289	1 pc/box
	PSR033US1100	PSR033US1100X	07945825239	PSR033UL1100	PSR033UL1100X	07945825290	1 pc/box
	PSR033US1250	PSR033US1250X	07945825240	PSR033UL1250	PSR033UL1250X	07945825291	1 pc/box
	PSR033US1400	PSR033US1400X	07945825241	PSR033UL1400	PSR033UL1400X	07945825292	1 pc/box
	PSR033US1500	PSR033US1500X	07945825242	PSR033UL1500	PSR033UL1500X	07945825293	1 pc/box
	PSR033US1600	PSR033US1600X	07945825243	PSR033UL1600	PSR033UL1600X	07945825294	1 pc/box
	PSR033US1800	PSR033US1800X	07945825244	PSR033UL1800	PSR033UL1800X	07945825295	1 pc/box
	PSR033US2000	PSR033US2000X	07945825245	PSR033UL2000	PSR033UL2000X	07945825296	1 pc/box
	PSR033US2250	PSR033US2250X	07945828554	PSR033UL2250	PSR033UL2250X	07945828533	1 pc/box

© 2023 Littelfuse, Inc.

PSR SERIES HIGH-SPEED SQUARE BODY BOLTED BLADE

Ordering Information (cont.)

CASE SIZE	BOLTED LONG BLADE (UL)			BOX QUANTITY
	CATALOG NUMBER	ORDERING PART NUMBER	UPC	
70	PSR070UL0050	PSR070UL0050Z	07945825297	3 pcs/box
	PSR070UL0063	PSR070UL0063Z	07945825298	3 pcs/box
	PSR070UL0080	PSR070UL0080Z	07945825299	3 pcs/box
	PSR070UL0100	PSR070UL0100Z	07945825300	3 pcs/box
	PSR070UL0125	PSR070UL0125Z	07945825301	3 pcs/box
	PSR070UL0160	PSR070UL0160Z	07945825302	3 pcs/box
	PSR070UL0200	PSR070UL0200Z	07945825303	3 pcs/box
	PSR070UL0250	PSR070UL0250Z	07945825304	3 pcs/box
	PSR070UL0280	PSR070UL0280Z	07945825305	3 pcs/box
	PSR070UL0315	PSR070UL0315Z	07945825306	3 pcs/box
	PSR070UL0350	PSR070UL0350Z	07945828534	3 pcs/box
	PSR070UL0400	PSR070UL0400Z	07945828535	3 pcs/box
71	PSR071UL0160	PSR071UL0160Z	07945825307	3 pcs/box
	PSR071UL0200	PSR071UL0200Z	07945825308	3 pcs/box
	PSR071UL0250	fPSR071UL0250Z	07945825309	3 pcs/box
	PSR071UL0280	PSR071UL0280Z	07945825310	3 pcs/box
	PSR071UL0315	PSR071UL0315Z	07945825311	3 pcs/box
	PSR071UL0350	PSR071UL0350Z	07945825312	3 pcs/box
	PSR071UL0400	PSR071UL0400Z	07945825313	3 pcs/box
	PSR071UL0450	PSR071UL0450Z	07945825314	3 pcs/box
	PSR071UL0500	PSR071UL0500Z	07945828536	3 pcs/box
	PSR071UL0550	PSR071UL0550Z	07945828537	3 pcs/box
	PSR071UL0630	PSR071UL0630Z	07945828538	3 pcs/box
72	PSR072UL0250	PSR072UL0250X	07945825315	1 pc/box
	PSR072UL0280	PSR072UL0280X	07945825316	1 pc/box
	PSR072UL0315	PSR072UL0315X	07945825317	1 pc/box
	PSR072UL0350	PSR072UL0350X	07945825318	1 pc/box
	PSR072UL0400	PSR072UL0400X	07945825319	1 pc/box
	PSR072UL0450	PSR072UL0450X	07945825320	1 pc/box
	PSR072UL0500	PSR072UL0500X	07945825321	1 pc/box
	PSR072UL0550	PSR072UL0550X	07945825322	1 pc/box
	PSR072UL0630	PSR072UL0630X	07945825323	1 pc/box
	PSR072UL0700	PSR072UL0700X	07945828539	1 pc/box
	PSR072UL0800	PSR072UL0800X	07945828540	1 pc/box
	PSR072UL0900	PSR072UL0900X	07945828541	1 pc/box
	PSR072UL1000	PSR072UL1000X	07945828542	1 pc/box
73	PSR073UL0315	PSR073UL0315X	07945825324	1 pc/box
	PSR073UL0350	PSR073UL0350X	07945825325	1 pc/box
	PSR073UL0400	PSR073UL0400X	07945825326	1 pc/box
	PSR073UL0450	PSR073UL0450X	07945825327	1 pc/box
	PSR073UL0500	PSR073UL0500X	07945825328	1 pc/box
	PSR073UL0550	PSR073UL0550X	07945825329	1 pc/box
	PSR073UL0630	PSR073UL0630X	07945825330	1 pc/box
	PSR073UL0700	PSR073UL0700X	07945825331	1 pc/box
	PSR073UL0800	PSR073UL0800X	07945828543	1 pc/box
	PSR073UL0900	PSR073UL0900X	07945828544	1 pc/box
	PSR073UL1000	PSR073UL1000X	07945828545	1 pc/box
	PSR073UL1100	PSR073UL1100X	07945828546	1 pc/box
	PSR073UL1250	PSR073UL1250X	07945828547	1 pc/box
	PSR073UL1400	PSR073UL1400X	07945828548	1 pc/box

© 2023 Littelfuse, Inc.

PSR SERIES HIGH-SPEED SQUARE BODY BOLTED BLADE

Dimensions (US and UL)

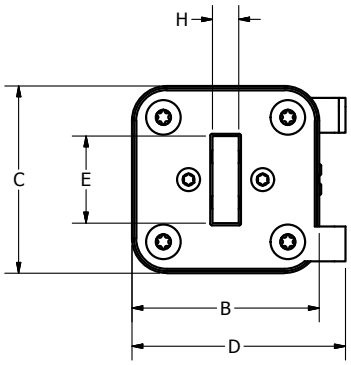

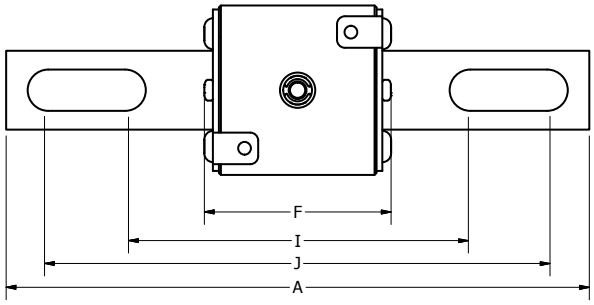

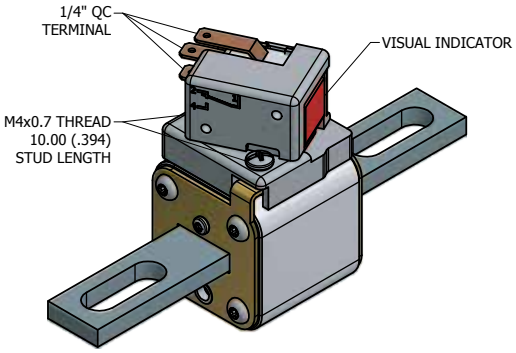

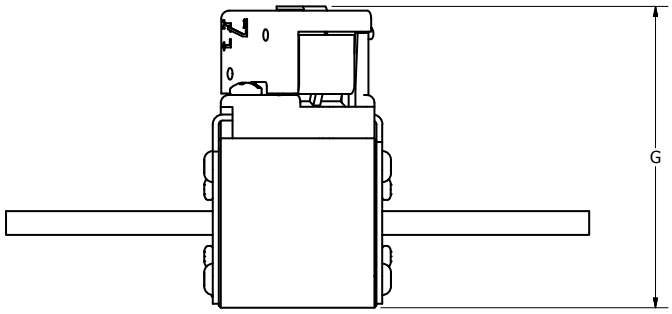

DIMENSIONS MM (IN)													
CASE SIZE	MOUNTING STYLE	A	B	C	D	E	F	G	H	I	J	RECOMMENDED FASTENER	TIGHTENING TORQUE (REFERENCE ONLY)
30	Short [US]	127.2 (5.01)	43.0 (1.69)	43.0 (1.69)	49.0 (1.93)	20.0 (0.79)	47.7 (1.88)	77.9 (3.07)	6.0 (0.24)	69.5 (2.74)	106.3 (4.19)	10 mm (3/8)	26 Nm
	Long [UL]	148.0 (5.83)	43.0 (1.69)	43.0 (1.69)	49.0 (1.93)	20.0 (0.79)	47.7 (1.88)	77.9 (3.07)	6.0 (0.24)	88.5 (3.48)	125.8 (4.95)	10 mm (3/8)	26 Nm
31	Short [US]	133.2 (5.24)	51.5 (2.03)	51.5 (2.03)	57.5 (2.26)	25.0 (0.98)	49.2 (1.94)	86.4 (3.40)	6.0 (0.24)	68.8 (2.71)	108.3 (4.26)	12 mm (1/2)	64 Nm
	Long [UL]	153.2 (6.03)	51.5 (2.03)	51.5 (2.03)	57.5 (2.26)	25.0 (0.98)	49.2 (1.94)	86.4 (3.40)	6.0 (0.24)	92.3 (3.63)	128.3 (5.05)	12 mm (1/2)	64 Nm
32	Short [US]	133.2 (5.24)	60.0 (2.36)	60.0 (2.36)	66.0 (2.60)	25.0 (0.98)	49.2 (1.94)	94.9 (3.74)	6.0 (0.24)	68.8 (2.71)	108.3 (4.26)	12 mm (1/2)	64 Nm
	Long [UL]	153.2 (6.03)	60.0 (2.36)	60.0 (2.36)	66.0 (2.60)	25.0 (0.98)	49.2 (1.94)	94.9 (3.74)	6.0 (0.24)	92.3 (3.63)	128.3 (5.05)	12 mm (1/2)	64 Nm
33	Short [US]	135.4 (5.33)	73.5 (2.89)	73.5 (2.89)	79.5 (3.13)	36.0 (1.42)	50.2 (1.98)	108.4 (4.27)	6.0 (0.24)	75.8 (2.98)	107.3 (4.22)	14 mm (9/16)	92 Nm
	Long [UL]	155.2 (6.11)	73.5 (2.89)	73.5 (2.89)	79.5 (3.13)	36.0 (1.42)	50.2 (1.98)	108.4 (4.27)	6.0 (0.24)	94.8 (3.73)	126.3 (4.97)	14 mm (9/16)	92 Nm
70	Long [UL]	151.2 (5.95)	43.0 (1.69)	43.0 (1.69)	49.0 (1.93)	20.0 (0.79)	71.7 (2.82)	77.9 (3.07)	6.0 (0.24)	92.8 (3.65)	130.3 (5.13)	10 mm (3/8)	26 Nm
71	Long [UL]	157.2 (6.19)	51.5 (2.03)	51.5 (2.03)	57.5 (2.26)	25.0 (0.98)	73.2 (2.88)	86.4 (3.40)	6.0 (0.24)	92.8 (3.65)	132.3 (5.21)	12 mm (1/2)	64 Nm
72	Long [UL]	157.2 (6.19)	60.0 (2.36)	60.0 (2.36)	66.0 (2.60)	25.0 (0.98)	73.2 (2.88)	94.9 (3.74)	6.0 (0.24)	92.8 (3.65)	132.3 (5.21)	12 mm (1/2)	64 Nm
73	Long [UL]	159.4 (6.28)	73.5 (2.89)	73.5 (2.89)	79.5 (3.13)	36.0 (1.42)	74.2 (2.92)	108.4 (4.27)	6.0 (0.24)	99.8 (3.93)	131.3 (5.17)	14 mm (9/16)	92 Nm

© 2023 Littelfuse, Inc.

PSR SERIES HIGH-SPEED SQUARE BODY DIN BLADE

Semiconductor Fuses • DIN 43653 Blade • 40 A—2250 A



Description

Littelfuse PSR series high-speed square body fuses are specially designed for protection of power semiconductor devices such as diodes, triacs, IGBTs, SCRs, MOSFETs, and other solid-state devices that are typically designed into power conversion and power conditioning equipment. Variable frequency drives, inverters, UPS, rectifiers, and soft-starters are examples of typical equipment designed with sensitive power semiconductor devices that cannot withstand any line surge or overcurrent conditions and require high-speed protection.

Littelfuse POWR-*SPEED*® PSR series products offer optimized circuit protection at the extremely fast speed required to protect modern day power conversion devices. Available in DIN43653 blade style termination with visual blown fuse indication standard on all fuses and optional micro-switch for external indication.

Features/Benefits

- Best in class dc performance
- Extremely current limiting
- Superior cycling capability
- Global certification cURus, CCC*, IEC
- Visual and optional microswitch fuse blown indication
- Low watt-loss design
- Compliance with US and Canadian requirements
- Fast-acting Class aR performance

Applications

- Power conversion devices (UPS, inverter, rectifiers, drives)
- Dc systems (dc common bus, dc injection braking)
- Battery protection application (energy storage systems)
- Electric vehicle charging stations
- Heaters and power supplies

* Refer to CCC section of Electrical Characteristics table

Specifications

Voltage Rating	Ac: 450 V–1300 V Dc: 450 V–1000 V
Amperage Rating	40 A–2250 A
Interrupting Rating	Ac: 100 kA–200 kA Dc: 150 kA
Time Constant	10 ms at IR
Microswitch	Yes
Mounting	DIN 43653 blade style
Material	Body: ceramic Contacts: plated copper
Approvals	cURus Recognized (File: E71611) CCC (Ac voltage) *
Applicable Standards	UL248-13, IEC 60269-4 (Class aR)
Environmental	RoHS Compliant, REACH
Operating Temperature	-55 °C to +125 °C
Storage Temperature	Up to +35 °C with relative humidity <65 %
Country of Origin	Mexico

Ordering Part Number

PSR 030 DS 0550 Z

- **Series**
- **Case Size**: 30, 31, 32, 33, 70, 71, 72, 73
- **Termination**: DS = DIN 80 mm fixing; DL = DIN 110 mm fixing
- **Amperage**
- **Packing Quantity**: X = (1 pc/box); Z = (3 pcs/box)

Catalog Number

SERIES	CASE SIZE	TERMINATION	AMPERAGE	CATALOG NUMBER	ORDERING PART NUMBER
PSR	030	DS	0550	PSR030DS0550	PSR030DS0550Z

Recommended Accessories

Microswitch: MS3H1000C (Case Size 30 to 33)
MS7H1500C (Case Size 70 to 73)

Web Resources

Download technical documents: **Littelfuse.com/PSR**

Note: high-speed fuses are designed for fixed installations. They are not intended for use in moving vehicle applications.

© 2023 Littelfuse, Inc.

PSR SERIES HIGH-SPEED SQUARE BODY DIN BLADE

Electrical Characteristics

CASE SIZE	CATALOG NUMBER		AMPERE RATING (A)	VOLTAGE RATING (V)			INTERRUPTING RATING		MELTING (PRE-ARC) I^2T (A^2S)	TOTAL CLEARING I^2T (A^2S) AT RATED VOLTAGE		WATT LOSS AT 100 % RATED CURRENT (W)	AGENCY CERTIFICATION	
	DIN 80 MM FIXING (DS)	DIN 110 MM FIXING (DL)		AC		DC	AC	DC		AC	DC		cURus	CCC
				IEC	UL									
30	PSR030DS0040	PSR030DL0040	40	690	700	600	200 kA	150 kA	76	280	260	13	•	•
	PSR030DS0050	PSR030DL0050	50	690	700	600	200 kA	150 kA	110	598	384	16	•	•
	PSR030DS0063	PSR030DL0063	63	690	700	600	200 kA	150 kA	176	1023	640	20	•	•
	PSR030DS0080	PSR030DL0080	80	690	700	600	200 kA	150 kA	304	1728	1252	24	•	•
	PSR030DS0100	PSR030DL0100	100	690	700	600	200 kA	150 kA	437	2835	1575	28	•	•
	PSR030DS0125	PSR030DL0125	125	690	700	600	200 kA	150 kA	707	4684	2783	37	•	•
	PSR030DS0160	PSR030DL0160	160	690	700	600	200 kA	150 kA	1359	9114	5507	40	•	•
	PSR030DS0200	PSR030DL0200	200	690	700	600	200 kA	150 kA	3012	15169	14700	40	•	•
	PSR030DS0250	PSR030DL0250	250	690	700	600	200 kA	150 kA	4668	29952	20833	52	•	•
	PSR030DS0315	PSR030DL0315	315	690	700	600	200 kA	150 kA	7131	61830	31600	64	•	•
	PSR030DS0350	PSR030DL0350	350	690	700	600	200 kA	150 kA	12007	85320	49273	66	•	•
	PSR030DS0400	PSR030DL0400	400	690	700	600	200 kA	150 kA	16209	114750	63367	78	•	•
	PSR030DS0450	PSR030DL0450	450	690	700	600	200 kA	150 kA	23133	160110	93533	80	•	•
	PSR030DS0500	PSR030DL0500	500	690	700	600	200 kA	150 kA	31429	225180	137333	84	•	•
	PSR030DS0550	PSR030DL0550	550	690	700	600	200 kA	150 kA	44323	268920	145400	85	•	•
	PSR030DS0630	PSR030DL0630	630	690	700	550	200 kA	150 kA	57404	480010	267800	91	•	
31	PSR031DS0200	PSR031DL0200	200	690	700	600	200 kA	150 kA	1965	17334	16188	49	•	•
	PSR031DS0250	PSR031DL0250	250	690	700	600	200 kA	150 kA	3789	35343	21080	52	•	•
	PSR031DS0315	PSR031DL0315	315	690	700	600	200 kA	150 kA	6862	59130	30694	63	•	•
	PSR031DS0350	PSR031DL0350	350	690	700	600	200 kA	150 kA	9523	76140	40996	67	•	•
	PSR031DS0400	PSR031DL0400	400	690	700	600	200 kA	150 kA	14770	124335	64359	70	•	•
	PSR031DS0450	PSR031DL0450	450	690	700	600	200 kA	150 kA	22457	178200	97444	70	•	•
	PSR031DS0500	PSR031DL0500	500	690	700	600	200 kA	150 kA	29751	251505	125935	74	•	•
	PSR031DS0550	PSR031DL0550	550	690	700	600	200 kA	150 kA	42056	289170	171845	86	•	•
	PSR031DS0630	PSR031DL0630	630	690	700	600	200 kA	150 kA	73513	507465	276315	87	•	•
	PSR031DS0700	PSR031DL0700	700	690	700	600	200 kA	150 kA	98187	601425	337260	93	•	•
	PSR031DS0800	PSR031DL0800	800	690	700	600	200 kA	150 kA	137208	848880	502815	107	•	•
	PSR031DS0900	PSR031DL0900	900	550	600	550	200 kA	150 kA	155163	945100	631820	126	•	
32	PSR032DS0400	PSR032DL0400	400	690	700	600	200 kA	150 kA	11104	79650	44533	87	•	•
	PSR032DS0450	PSR032DL0450	450	690	700	600	200 kA	150 kA	15535	116100	65463	88	•	•
	PSR032DS0500	PSR032DL0500	500	690	700	600	200 kA	150 kA	21573	161460	88277	94	•	•
	PSR032DS0550	PSR032DL0550	550	690	700	600	200 kA	150 kA	26327	177660	107960	106	•	•
	PSR032DS0630	PSR032DL0630	630	690	700	600	200 kA	150 kA	34790	234900	156963	114	•	•
	PSR032DS0700	PSR032DL0700	700	690	700	600	200 kA	150 kA	51191	291870	209287	127	•	•
	PSR032DS0800	PSR032DL0800	800	690	700	600	200 kA	150 kA	60125	472770	249000	152	•	•
	PSR032DS0900	PSR032DL0900	900	690	700	600	200 kA	150 kA	107785	764100	404000	145	•	•
	PSR032DS1000	PSR032DL1000	1000	690	700	600	200 kA	150 kA	190102	933120	672333	149	•	•
	PSR032DS1100	PSR032DL1100	1100	690	700	600	200 kA	150 kA	225379	1247400	744000	161	•	•
	PSR032DS1250	PSR032DL1250	1250	550	500*	450*	200 kA	150 kA	336661	1114994	1197000	166	•	
	PSR032DS1400	PSR032DL1400	1400	450	500	450	200 kA	150 kA	551749	1611639	1865400	184	•	
	PSR032DS1500	PSR032DL1500	1500	450	500	450	200 kA	150 kA	673360	2045907	1735500	192	•	
33	PSR033DS0450	PSR033DL0450	450	690	700	600	200 kA	150 kA	13600	106380	58947	107	•	•
	PSR033DS0500	PSR033DL0500	500	690	700	600	200 kA	150 kA	16434	140400	77846	107	•	•
	PSR033DS0550	PSR033DL0550	550	690	700	600	200 kA	150 kA	23314	187650	100461	111	•	•
	PSR033DS0630	PSR033DL0630	630	690	700	600	200 kA	150 kA	38727	285930	142437	120	•	•
	PSR033DS0700	PSR033DL0700	700	690	700	600	200 kA	150 kA	56763	392580	209863	116	•	•
	PSR033DS0800	PSR033DL0800	800	690	700	600	200 kA	150 kA	84691	575505	348500	122	•	•
	PSR033DS0900	PSR033DL0900	900	690	700	600	200 kA	150 kA	122619	740340	451177	138	•	•
	PSR033DS1000	PSR033DL1000	1000	690	700	600	200 kA	150 kA	222350	1170450	787750	138	•	•
	PSR033DS1100	PSR033DL1100	1100	690	700	600	200 kA	150 kA	310824	1568700	821400	138	•	•
	PSR033DS1250	PSR033DL1250	1250	690	700	500	200 kA	150 kA	476902	2403000	1674333	145	•	•
	PSR033DS1400	PSR033DL1400	1400	690	700	500	200 kA	150 kA	583552	2920050	1979750	173	•	•
	PSR033DS1500	PSR033DL1500	1500	600	650	500	200 kA	150 kA	674538	2433200	1996733	182	•	•
	PSR033DS1600	PSR033DL1600	1600	600	650	500	200 kA	150 kA	779948	2942800	2301633	208	•	•
	PSR033DS1800	PSR033DL1800	1800	600	650	500	200 kA	150 kA	952196	3785040	2724180	260	•	•
	PSR033DS2000	PSR033DL2000	2000	550	600	480	200 kA	150 kA	1234315	4131600	3755180	264	•	•
	PSR033DS2250	PSR033DL2250	2250	500	550	450	200 kA	150 kA	1236000	4459651	3859500	349	•	

* PSR032 1250 A: 600 V Ac/550 V Dc

© 2023 Littelfuse, Inc.

PSR SERIES HIGH-SPEED SQUARE BODY DIN BLADE

Electrical Characteristics (cont.)

CASE SIZE	CATALOG NUMBER	AMPERE RATING (A)	VOLTAGE RATING (V)			INTERRUPTING RATING		MELTING (PRE-ARC) I^2T (A^2S)	TOTAL CLEARING I^2T (A^2S) AT RATED VOLTAGE		WATT LOSS AT 100 % RATED CURRENT (W)	AGENCY CERTIFICATION	
			AC		DC	AC	DC		AC	DC			
	DIN 110 MM FIXING (DL)		IEC	UL								cURus	CCC
70	PSR070DL0050	50	1250	1300	1000	100 kA	150 kA	177	2050	400	21	•	•
	PSR070DL0063	63	1250	1300	1000	100 kA	150 kA	273	3399	900	24	•	•
	PSR070DL0080	80	1250	1300	1000	100 kA	150 kA	583	6732	2200	25	•	•
	PSR070DL0100	100	1250	1300	1000	100 kA	150 kA	974	10996	3750	30	•	•
	PSR070DL0125	125	1250	1300	1000	100 kA	150 kA	1352	13011	5150	44	•	•
	PSR070DL0160	160	1250	1300	1000	100 kA	150 kA	2377	25662	8950	53	•	•
	PSR070DL0200	200	1250	1300	1000	100 kA	150 kA	4177	39087	17267	62	•	•
	PSR070DL0250	250	1250	1300	1000	100 kA	150 kA	8629	89790	36750	73	•	•
	PSR070DL0280	280	1250	1300	1000	100 kA	150 kA	11844	113201	46750	77	•	•
	PSR070DL0315	315	1250	1300	1000	100 kA	150 kA	18162	142051	66833	80	•	•
	PSR070DL0350	350	1250	1200*	900*	100 kA	150 kA	22963	215230	95410	76	•	
	PSR070DL0400	400	1100	1200	900	100 kA	150 kA	37103	283480	154320	78	•	
71	PSR071DL0160	160	1250	1300	1000	100 kA	150 kA	2756	24600	8800	45	•	•
	PSR071DL0200	200	1250	1300	1000	100 kA	150 kA	4918	50307	19050	52	•	•
	PSR071DL0250	250	1250	1300	1000	100 kA	150 kA	10592	104427	43100	55	•	•
	PSR071DL0280	280	1250	1300	1000	100 kA	150 kA	13763	131897	54150	58	•	•
	PSR071DL0315	315	1250	1300	1000	100 kA	150 kA	20882	200244	67450	59	•	•
	PSR071DL0350	350	1250	1300	1000	100 kA	150 kA	23301	225500	102500	70	•	•
	PSR071DL0400	400	1250	1300	1000	100 kA	150 kA	43211	374986	185000	76	•	•
	PSR071DL0450	450	1250	1300	1000	100 kA	150 kA	55915	452394	241333	88	•	•
	PSR071DL0500	500	1100	1200	900	100 kA	150 kA	75315	468845	253960	93	•	
	PSR071DL0550	550	1100	1200	900	100 kA	150 kA	87328	693507	332600	90	•	
	PSR071DL0630	630	1000	1100	900	100 kA	150 kA	131240	790862	426550	103	•	
72	PSR072DL0250	250	1250	1300	1000	100 kA	150 kA	7737	72789	28567	64	•	•
	PSR072DL0280	280	1250	1300	1000	100 kA	150 kA	10915	124538	46897	62	•	•
	PSR072DL0315	315	1250	1300	1000	100 kA	150 kA	16187	145140	58867	69	•	•
	PSR072DL0350	350	1250	1300	1000	100 kA	150 kA	18727	160447	69633	81	•	•
	PSR072DL0400	400	1250	1300	1000	100 kA	150 kA	27112	243540	108000	93	•	•
	PSR072DL0450	450	1250	1300	1000	100 kA	150 kA	35927	406413	159133	107	•	•
	PSR072DL0500	500	1250	1300	1000	100 kA	150 kA	50398	425375	216333	115	•	•
	PSR072DL0550	550	1250	1300	1000	100 kA	150 kA	73858	539833	271333	115	•	•
	PSR072DL0630	630	1250	1300	1000	100 kA	150 kA	126126	942180	436000	119	•	•
	PSR072DL0700	700	1100	1200	900**	100 kA	150 kA	228761	1123694	715180	89	•	
	PSR072DL0800	800	1100	1200	900**	100 kA	150 kA	230695	1432388	911650	129	•	
	PSR072DL0900	900	1000	900*	900**	100 kA	150 kA	376641	1309993	1030400	131	•	
	PSR072DL1000	1000	850	900	800**	100 kA	150 kA	455955	1772548	1361500	156	•	
73	PSR073DL0315	315	1250	1300	1000	100 kA	150 kA	10245	106600	38650	100	•	•
	PSR073DL0350	350	1250	1300	1000	100 kA	150 kA	13586	159627	57467	100	•	•
	PSR073DL0400	400	1250	1300	1000	100 kA	150 kA	19797	211273	86800	124	•	•
	PSR073DL0450	450	1250	1300	1000	100 kA	150 kA	29834	279073	114333	122	•	•
	PSR073DL0500	500	1250	1300	1000	100 kA	150 kA	42751	416437	184500	121	•	•
	PSR073DL0550	550	1250	1300	1000	100 kA	150 kA	55513	491713	224500	130	•	•
	PSR073DL0630	630	1250	1300	1000	100 kA	150 kA	94649	804338	377500	136	•	•
	PSR073DL0700	700	1250	1300	1000	100 kA	150 kA	158097	1170960	575667	135	•	•
	PSR073DL0800	800	1250	1300	1000**	100 kA	150 kA	234943	1769880	733460	128	•	
	PSR073DL0900	900	950	1050	800**	100 kA	150 kA	317743	2280547	901779	156	•	
	PSR073DL1000	1000	950	1050	800**	100 kA	150 kA	476221	3910801	1546418	143	•	
	PSR073DL1100	1100	950	1050	800**	100 kA	150 kA	570870	2736600	1699000	165	•	
	PSR073DL1250	1250	900	1000	-	100 kA	-	993924	3091160	-	197	•	
	PSR073DL1400	1400	900	1000	-	100 kA	-	1168091	3627820	-	249	•	

* PSR070 350 A: 1300 V Ac/1000 V Dc
PSR072 900 A: 1100 V Ac
** No UL certification for Dc voltage

© 2023 Littelfuse, Inc.

PSR SERIES HIGH-SPEED SQUARE BODY DIN BLADE

Ordering Information

CASE SIZE	DIN 80 MM FIXING (DS)			DIN 110 MM FIXING (DL)			BOX QUANTITY
	CATALOG NUMBER	ORDERING PART NUMBER	UPC	CATALOG NUMBER	ORDERING PART NUMBER	UPC	
30	PSR030DS0040	PSR030DS0040Z	07945824985	PSR030DL0040	PSR030DL0040Z	07945825049	3 pcs/box
	PSR030DS0050	PSR030DS0050Z	07945824986	PSR030DL0050	PSR030DL0050Z	07945825050	3 pcs/box
	PSR030DS0063	PSR030DS0063Z	07945824987	PSR030DL0063	PSR030DL0063Z	07945825051	3 pcs/box
	PSR030DS0080	PSR030DS0080Z	07945824988	PSR030DL0080	PSR030DL0080Z	07945825052	3 pcs/box
	PSR030DS0100	PSR030DS0100Z	07945824989	PSR030DL0100	PSR030DL0100Z	07945825054	3 pcs/box
	PSR030DS0125	PSR030DS0125Z	07945824990	PSR030DL0125	PSR030DL0125Z	07945825056	3 pcs/box
	PSR030DS0160	PSR030DS0160Z	07945824991	PSR030DL0160	PSR030DL0160Z	07945825057	3 pcs/box
	PSR030DS0200	PSR030DS0200Z	07945824992	PSR030DL0200	PSR030DL0200Z	07945825059	3 pcs/box
	PSR030DS0250	PSR030DS0250Z	07945824993	PSR030DL0250	PSR030DL0250Z	07945825060	3 pcs/box
	PSR030DS0315	PSR030DS0315Z	07945824994	PSR030DL0315	PSR030DL0315Z	07945825062	3 pcs/box
	PSR030DS0350	PSR030DS0350Z	07945824995	PSR030DL0350	PSR030DL0350Z	07945825066	3 pcs/box
	PSR030DS0400	PSR030DS0400Z	07945824996	PSR030DL0400	PSR030DL0400Z	07945825069	3 pcs/box
	PSR030DS0450	PSR030DS0450Z	07945824997	PSR030DL0450	PSR030DL0450Z	07945825070	3 pcs/box
	PSR030DS0500	PSR030DS0500Z	07945824998	PSR030DL0500	PSR030DL0500Z	07945825074	3 pcs/box
	PSR030DS0550	PSR030DS0550Z	07945824999	PSR030DL0550	PSR030DL0550Z	07945825075	3 pcs/box
	PSR030DS0630	PSR030DS0630Z	07945827822	PSR030DL0630	PSR030DL0630Z	07945827801	3 pcs/box
31	PSR031DS0200	PSR031DS0200Z	07945825000	PSR031DL0200	PSR031DL0200Z	07945825076	3 pcs/box
	PSR031DS0250	PSR031DS0250Z	07945825001	PSR031DL0250	PSR031DL0250Z	07945825077	3 pcs/box
	PSR031DS0315	PSR031DS0315Z	07945825002	PSR031DL0315	PSR031DL0315Z	07945825078	3 pcs/box
	PSR031DS0350	PSR031DS0350Z	07945825003	PSR031DL0350	PSR031DL0350Z	07945825079	3 pcs/box
	PSR031DS0400	PSR031DS0400Z	07945825004	PSR031DL0400	PSR031DL0400Z	07945825080	3 pcs/box
	PSR031DS0450	PSR031DS0450Z	07945825005	PSR031DL0450	PSR031DL0450Z	07945825081	3 pcs/box
	PSR031DS0500	PSR031DS0500Z	07945825006	PSR031DL0500	PSR031DL0500Z	07945825082	3 pcs/box
	PSR031DS0550	PSR031DS0550Z	07945825007	PSR031DL0550	PSR031DL0550Z	07945825083	3 pcs/box
	PSR031DS0630	PSR031DS0630Z	07945825008	PSR031DL0630	PSR031DL0630Z	07945825084	3 pcs/box
	PSR031DS0700	PSR031DS0700Z	07945825009	PSR031DL0700	PSR031DL0700Z	07945825085	3 pcs/box
	PSR031DS0800	PSR031DS0800Z	07945825010	PSR031DL0800	PSR031DL0800Z	07945825086	3 pcs/box
	PSR031DS0900	PSR031DS0900Z	07945827823	PSR031DL0900	PSR031DL0900Z	07945827802	3 pcs/box
32	PSR032DS0400	PSR032DS0400X	07945825013	PSR032DL0400	PSR032DL0400X	07945825087	1 pc/box
	PSR032DS0450	PSR032DS0450X	07945825014	PSR032DL0450	PSR032DL0450X	07945825088	1 pc/box
	PSR032DS0500	PSR032DS0500X	07945825015	PSR032DL0500	PSR032DL0500X	07945825089	1 pc/box
	PSR032DS0550	PSR032DS0550X	07945825016	PSR032DL0550	PSR032DL0550X	07945825090	1 pc/box
	PSR032DS0630	PSR032DS0630X	07945825017	PSR032DL0630	PSR032DL0630X	07945825091	1 pc/box
	PSR032DS0700	PSR032DS0700X	07945825021	PSR032DL0700	PSR032DL0700X	07945825092	1 pc/box
	PSR032DS0800	PSR032DS0800X	07945825022	PSR032DL0800	PSR032DL0800X	07945825141	1 pc/box
	PSR032DS0900	PSR032DS0900X	07945825023	PSR032DL0900	PSR032DL0900X	07945825142	1 pc/box
	PSR032DS1000	PSR032DS1000X	07945825025	PSR032DL1000	PSR032DL1000X	07945825143	1 pc/box
	PSR032DS1100	PSR032DS1100X	07945825026	PSR032DL1100	PSR032DL1100X	07945825144	1 pc/box
	PSR032DS1250	PSR032DS1250X	07945827824	PSR032DL1250	PSR032DL1250X	07945827803	1 pc/box
	PSR032DS1400	PSR032DS1400X	07945827825	PSR032DL1400	PSR032DL1400X	07945827804	1 pc/box
	PSR032DS1500	PSR032DS1500X	07945827826	PSR032DL1500	PSR032DL1500X	07945827805	1 pc/box
33	PSR033DS0450	PSR033DS0450X	07945825027	PSR033DL0450	PSR033DL0450X	07945825145	1 pc/box
	PSR033DS0500	PSR033DS0500X	07945825028	PSR033DL0500	PSR033DL0500X	07945825146	1 pc/box
	PSR033DS0550	PSR033DS0550X	07945825030	PSR033DL0550	PSR033DL0550X	07945825147	1 pc/box
	PSR033DS0630	PSR033DS0630X	07945825032	PSR033DL0630	PSR033DL0630X	07945825148	1 pc/box
	PSR033DS0700	PSR033DS0700X	07945825033	PSR033DL0700	PSR033DL0700X	07945825149	1 pc/box
	PSR033DS0800	PSR033DS0800X	07945825034	PSR033DL0800	PSR033DL0800X	07945825150	1 pc/box
	PSR033DS0900	PSR033DS0900X	07945825035	PSR033DL0900	PSR033DL0900X	07945825151	1 pc/box
	PSR033DS1000	PSR033DS1000X	07945825036	PSR033DL1000	PSR033DL1000X	07945825152	1 pc/box
	PSR033DS1100	PSR033DS1100X	07945825038	PSR033DL1100	PSR033DL1100X	07945825153	1 pc/box
	PSR033DS1250	PSR033DS1250X	07945825039	PSR033DL1250	PSR033DL1250X	07945825154	1 pc/box
	PSR033DS1400	PSR033DS1400X	07945825040	PSR033DL1400	PSR033DL1400X	07945825155	1 pc/box
	PSR033DS1500	PSR033DS1500X	07945825042	PSR033DL1500	PSR033DL1500X	07945825156	1 pc/box
	PSR033DS1600	PSR033DS1600X	07945825044	PSR033DL1600	PSR033DL1600X	07945825157	1 pc/box
	PSR033DS1800	PSR033DS1800X	07945825045	PSR033DL1800	PSR033DL1800X	07945825158	1 pc/box
	PSR033DS2000	PSR033DS2000X	07945825046	PSR033DL2000	PSR033DL2000X	07945825159	1 pc/box
	PSR033DS2250	PSR033DS2250X	07945827827	PSR033DL2250	PSR033DL2250X	07945827806	1 pc/box

© 2023 Littelfuse, Inc.

PSR SERIES HIGH-SPEED SQUARE BODY DIN BLADE

Ordering Information (cont.)

CASE SIZE	DIN 110 MM FIXING (DL)			BOX QUANTITY
	CATALOG NUMBER	ORDERING PART NUMBER	UPC	
70	PSR070DL0050	PSR070DL0050Z	07945825160	3 pcs/box
	PSR070DL0063	PSR070DL0063Z	07945825161	3 pcs/box
	PSR070DL0080	PSR070DL0080Z	07945825162	3 pcs/box
	PSR070DL0100	PSR070DL0100Z	07945825163	3 pcs/box
	PSR070DL0125	PSR070DL0125Z	07945825164	3 pcs/box
	PSR070DL0160	PSR070DL0160Z	07945825165	3 pcs/box
	PSR070DL0200	PSR070DL0200Z	07945825166	3 pcs/box
	PSR070DL0250	PSR070DL0250Z	07945825167	3 pcs/box
	PSR070DL0280	PSR070DL0280Z	07945825168	3 pcs/box
	PSR070DL0315	PSR070DL0315Z	07945825169	3 pcs/box
	PSR070DL0350	PSR070DL0350Z	07945827807	3 pcs/box
	PSR070DL0400	PSR070DL0400Z	07945827808	3 pcs/box
71	PSR071DL0160	PSR071DL0160Z	07945825170	3 pcs/box
	PSR071DL0200	PSR071DL0200Z	07945825171	3 pcs/box
	PSR071DL0250	PSR071DL0250Z	07945825172	3 pcs/box
	PSR071DL0280	PSR071DL0280Z	07945825173	3 pcs/box
	PSR071DL0315	PSR071DL0315Z	07945825174	3 pcs/box
	PSR071DL0350	PSR071DL0350Z	07945825175	3 pcs/box
	PSR071DL0400	PSR071DL0400Z	07945825176	3 pcs/box
	PSR071DL0450	PSR071DL0450Z	07945825177	3 pcs/box
	PSR071DL0500	PSR071DL0500Z	07945827809	3 pcs/box
	PSR071DL0550	PSR071DL0550Z	07945827810	3 pcs/box
	PSR071DL0630	PSR071DL0630Z	07945827811	3 pcs/box
72	PSR072DL0250	PSR072DL0250X	07945825178	1 pc/box
	PSR072DL0280	PSR072DL0280X	07945825179	1 pc/box
	PSR072DL0315	PSR072DL0315X	07945825180	1 pc/box
	PSR072DL0350	PSR072DL0350X	07945825181	1 pc/box
	PSR072DL0400	PSR072DL0400X	07945825182	1 pc/box
	PSR072DL0450	PSR072DL0450X	07945825183	1 pc/box
	PSR072DL0500	PSR072DL0500X	07945825184	1 pc/box
	PSR072DL0550	PSR072DL0550X	07945825185	1 pc/box
	PSR072DL0630	PSR072DL0630X	07945825186	1 pc/box
	PSR072DL0700	PSR072DL0700X	07945827812	1 pc/box
	PSR072DL0800	PSR072DL0800X	07945827813	1 pc/box
	PSR072DL0900	PSR072DL0900X	07945827814	1 pc/box
	PSR072DL1000	PSR072DL1000X	07945827815	1 pc/box
73	PSR073DL0315	PSR073DL0315X	07945825187	1 pc/box
	PSR073DL0350	PSR073DL0350X	07945825188	1 pc/box
	PSR073DL0400	PSR073DL0400X	07945825189	1 pc/box
	PSR073DL0450	PSR073DL0450X	07945825190	1 pc/box
	PSR073DL0500	PSR073DL0500X	07945825191	1 pc/box
	PSR073DL0550	PSR073DL0550X	07945825192	1 pc/box
	PSR073DL0630	PSR073DL0630X	07945825193	1 pc/box
	PSR073DL0700	PSR073DL0700X	07945825194	1 pc/box
	PSR073DL0800	PSR073DL0800X	07945827816	1 pc/box
	PSR073DL0900	PSR073DL0900X	07945827817	1 pc/box
	PSR073DL1000	PSR073DL1000X	07945827818	1 pcsbox
	PSR073DL1100	PSR073DL1100X	07945827819	1 pc/box
	PSR073DL1250	PSR073DL1250X	07945827820	1 pc/box
	PSR073DL1400	PSR073DL1400X	07945827821	1 pc/box

© 2023 Littelfuse, Inc.

Dimensions (DS and DL)

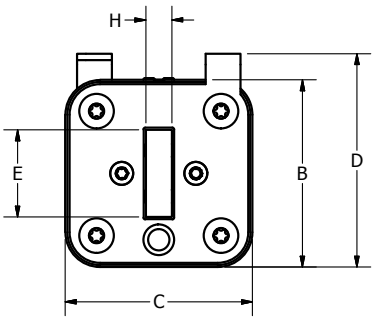

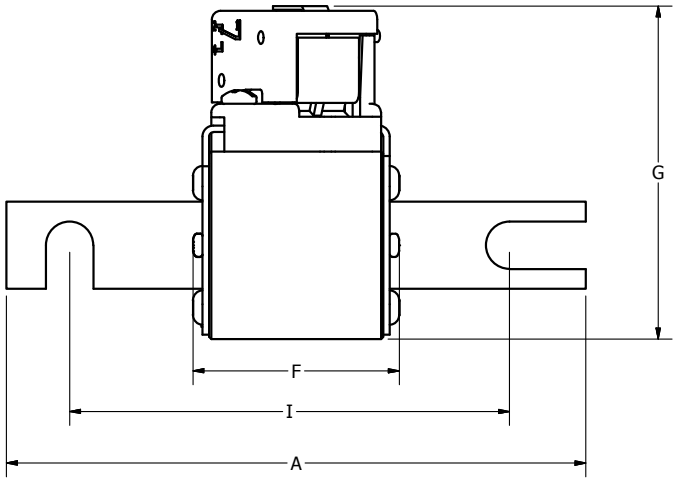

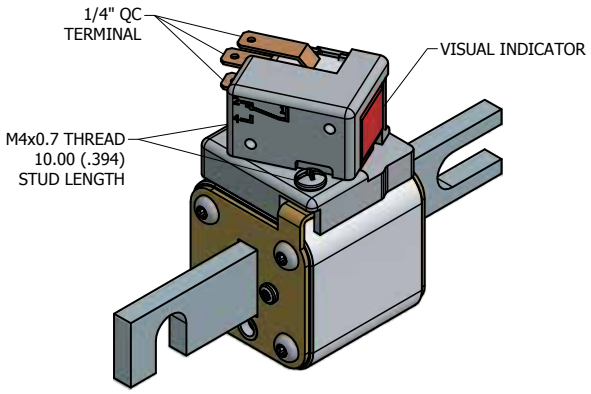

DIMENSIONS MM (IN)												
CASE SIZE	MOUNTING STYLE	A	B	C	D	E	F	G	H	I	RECOMMENDED FASTENER	TIGHTENING TORQUE (REFERENCE ONLY)
30	DIN 80 [DS]	109.0 (4.29)	43.0 (1.69)	43.0 (1.69)	49.0 (1.93)	20.0 (0.79)	47.7 (1.88)	77.9 (3.07)	6.0 (0.24)	77.8 (3.06)	10 mm (3/8)	26 Nm
	DIN 110 [DL]	132.5 (5.22)	43.0 (1.69)	43.0 (1.69)	49.0 (1.93)	20.0 (0.79)	47.7 (1.88)	77.9 (3.07)	6.0 (0.24)	101.8 (4.01)	10 mm (3/8)	26 Nm
31	DIN 80 [DS]	109.2 (4.30)	51.5 (2.03)	51.5 (2.03)	57.5 (2.26)	25.0 (0.98)	49.2 (1.94)	86.4 (3.40)	6.0 (0.24)	77.8 (3.06)	10 mm (3/8)	26 Nm
	DIN 110 [DL]	133.2 (5.24)	51.5 (2.03)	51.5 (2.03)	57.5 (2.26)	25.0 (0.98)	49.2 (1.94)	86.4 (3.40)	6.0 (0.24)	101.8 (4.01)	10 mm (3/8)	26 Nm
32	DIN 80 [DS]	109.2 (4.30)	60.0 (2.36)	60.0 (2.36)	66.0 (2.60)	25.0 (0.98)	49.2 (1.94)	94.9 (3.74)	6.0 (0.24)	77.8 (3.06)	10 mm (3/8)	26 Nm
	DIN 110 [DL]	133.2 (5.24)	60.0 (2.36)	60.0 (2.36)	66.0 (2.60)	25.0 (0.98)	49.2 (1.94)	94.9 (3.74)	6.0 (0.24)	101.8 (4.01)	10 mm (3/8)	26 Nm
33	DIN 80 [DS]	109.2 (4.30)	73.5 (2.89)	73.5 (2.89)	79.5 (3.13)	36.0 (1.42)	50.2 (1.98)	108.4 (4.27)	6.0 (0.24)	77.8 (3.06)	10 mm (3/8)	26 Nm
	DIN 110 [DL]	133.2 (5.24)	73.5 (2.89)	73.5 (2.89)	79.5 (3.13)	36.0 (1.42)	50.2 (1.98)	108.4 (4.27)	6.0 (0.24)	101.8 (4.01)	10 mm (3/8)	26 Nm
70	DIN 110 [DL]	133.0 (5.24)	43.0 (1.69)	43.0 (1.69)	49.0 (1.93)	20.0 (0.79)	71.7 (2.82)	77.9 (3.07)	6.0 (0.24)	101.8 (4.01)	10 mm (3/8)	26 Nm
71	DIN 110 [DL]	133.2 (5.24)	51.5 (2.03)	51.5 (2.03)	57.5 (2.26)	25.0 (0.98)	73.2 (2.88)	86.4 (3.40)	6.0 (0.24)	101.8 (4.01)	10 mm (3/8)	26 Nm
72	DIN 110 [DL]	133.2 (5.24)	60.0 (2.36)	60.0 (2.36)	66.0 (2.60)	25.0 (0.98)	73.2 (2.88)	94.9 (3.74)	6.0 (0.24)	101.8 (4.01)	10 mm (3/8)	26 Nm
73	DIN 110 [DL]	133.2 (5.24)	73.5 (2.89)	73.5 (2.89)	79.5 (3.13)	36.0 (1.42)	74.2 (2.92)	108.4 (4.27)	6.0 (0.24)	101.8 (4.01)	10 mm (3/8)	26 Nm

© 2023 Littelfuse, Inc.

MS SERIES HIGH-SPEED FUSE MICROSWITCH

Microswitch for Square Body Fuse

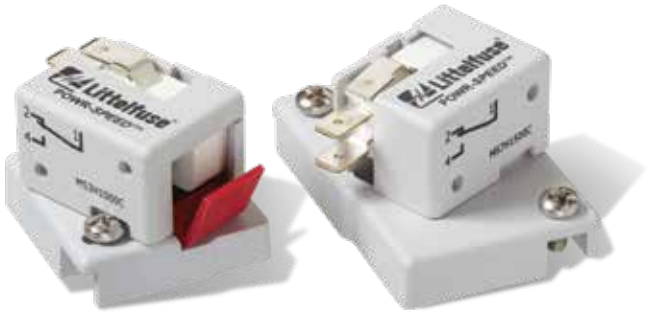

Description

Littelfuse MS series external mount microswitches offer permanent blown fuse indication to PSR and PSX series high-speed square-body semiconductor fuses. They have one normally open (N.O.) and one normally closed (N.C.) contact rated for 4 A, 250 V ac.

These microswitches have a visual red flap or arm indicator that releases after fuse blown condition and can also be used for resetting the microswitch contacts.

Features/Benefits

- Available in three sizes to fit PSR and PSX series fuses
- Internal microswitch UL recognized
- Red flap visual indicator and contact reset mechanism

Specifications

Voltage Rating	See Electrical Characteristics table
Amperage Rating	See Electrical Characteristics table
Operating Temperature	-25 °C to +125 °C
Relative Humidity	85 %
Contact	Silver-nickel plated copper
Approvals	Internal microswitch part number: MS1-16Z0-A150, recognized under UL File: E176213
Flammability	UL 94 V0
Environmental	RoHS Compliant
Country of Origin	China

Electrical Characteristics

CATALOG NUMBER	ORDERING NUMBER	INDICATING STYLE	INSULATION VOLTAGE RATING	COMPATIBLE FUSE SERIES	FUSE CASE SIZE	NON-INDUCTIVE LOAD			PACK QUANTITY
						30 V DC	125 V AC	250 V AC	
MS3H1000C	MS3H1000C	Standard NO-NC	1000	PSR	30, 31, 32, 33	10 A	16 A	4 A	3 Pcs/Bag
MS7H1500C	MS7H1500C	Standard NO-NC	1500	PSR	70, 71, 72, 73	10 A	16 A	4 A	3 Pcs/Bag
MSXL2000C	MSXL2000C	Standard NO-NC	2000	PSX	1XL, 3XL	10 A	16 A	4 A	1 Pcs/Bag

© 2023 Littelfuse, Inc.

Dimensions

MS3H1000C

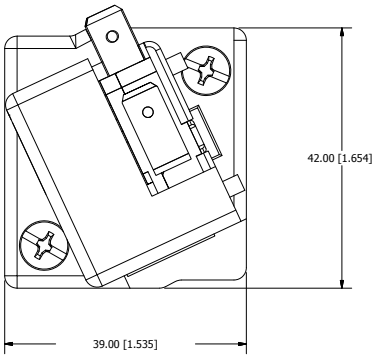

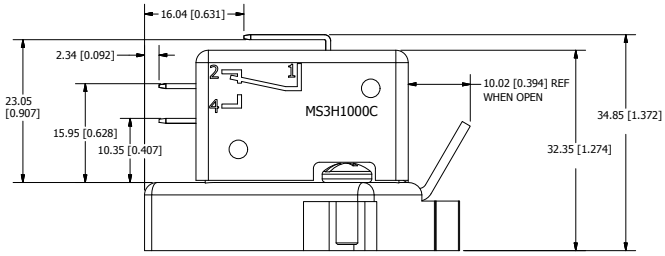

MS7H1500C

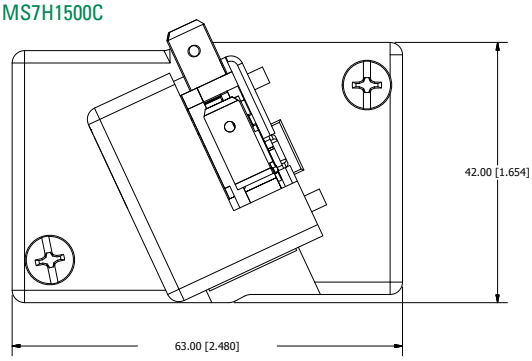

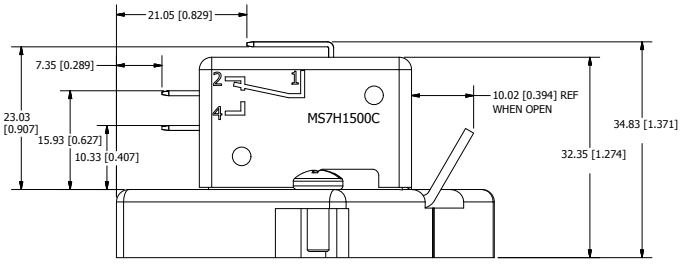

MSXL2000C

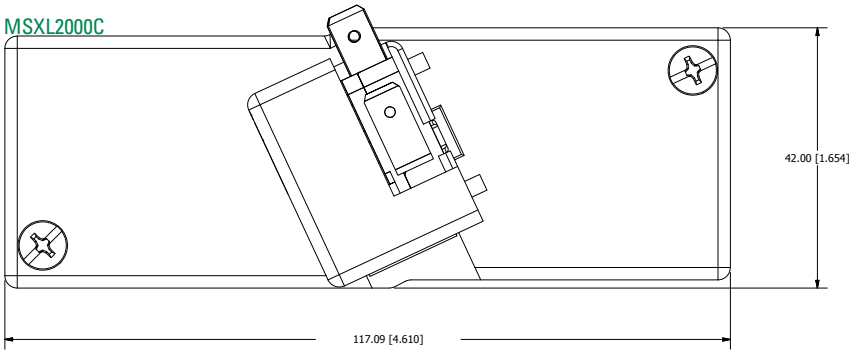

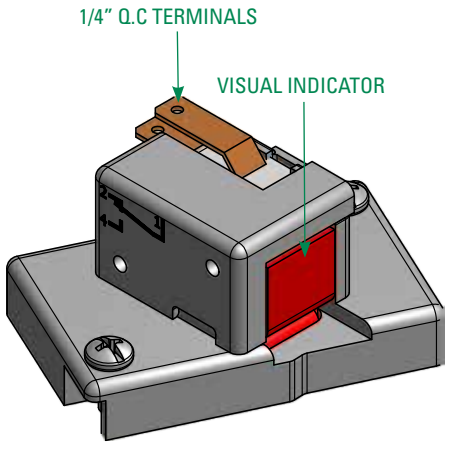

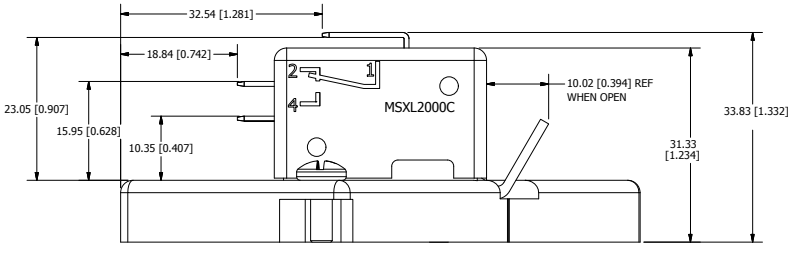

© 2023 Littelfuse, Inc.

L50QS SERIES HIGH-SPEED ROUND-BODY FUSES

500 Vac/dc • 35-800 A • Traditional Round-Body Bolted Style



Description

The L50QS Series is a next generation High-Speed Fuse for the protection of power semiconductor devices and is designed in the Traditional North American Bolted Style package.

L50QS Series High-Speed Fuses are extremely current limiting and are used to protect power converters, drives and control circuit applications. Designed with lower I^2t performance characteristics, these fuses provide balanced performance to extend longevity while lowering potentially damaging heat energy to the devices being protected.

In addition L50QS Series fuses have been designed with a universal mounting option to meet customer requirements for installation into a variety of application configurations

Littelfuse POWR-*SPEED*™ products offer optimized circuit protection at the extremely fast speed required to protect modern day, sensitive, high-power semiconductor devices. Such products are commonly found in various industries including pulp and paper industries, cranes and heavy-lifting equipment, processing industries, wastewater treatment plants and large factories and MRO facilities.

Features/Benefits

- Compliance with US and Canadian Requirements
- Traditional North American Bolted Style dimensions
- Class aR performance
- Direct bus-bar mount or stud mount design
- RoHS and REACH Compliant

Applications

- Power Converters (Inverters, Rectifiers)
- Power Supplies
- UPS
- Variable Speed Drives
- Control Circuits
- Soft Starters

Specifications

Voltage Rating	AC: 500V DC: 500V
Amperage Rating	35 - 800
Interrupting Rating	AC: 200 kA DC: 50 kA
Material	Body: Melamine Caps: Copper Alloy (Silver Plated)
Approvals	UL Recognized (E71611) c-UR-us (E71611)
Environmental	RoHS Compliant, REACH
Country of Origin	Mexico
Operating Temperature	-55C to +125C
Storage Temperature	Up to 35C with Relative Humidity <65%

Part Numbering System

L50 QS 500 X

- **L50** — Series
- **QS** — Body Type
- **500** — Ampere Code
- **X** — Package Quantity
  - X = 1 (450 - 800A)
  - V = 5 (125 - 400A)
  - T = 10 (35 - 100A)

SERIES	BODY TYPE	AMPERE CODE	PACKAGE QUANTITY	CATALOG NUMBER	ORDERING NUMBER
L50	QS	500	1	L50QS500	L50QS500.X

Recommended Fuse Blocks

LSCR001 (35-200 A) 127
LSCR002 (225-800 A) 127



Web Resources

Download technical documents: **Littelfuse.com/L50QS**

© 2023 Littelfuse, Inc.

L50QS SERIES HIGH-SPEED ROUND-BODY FUSES

Electrical Specifications

CATALOG NUMBER	AMPERAGE RATING	VOLTAGE RATING		INTERRUPT RATING		MELTING (PRE-ARC) I^2T (A^2s)	TOTAL CLEARING I^2T (A^2s)	TOTAL CLEARING I^2T (A^2s)	WATTS LOSS AT 80% RATED CURRENT	WATTS LOSS AT 100% RATED CURRENT
		AC	DC	AC	DC		200 kA @ 500 Vac	50 kA @ 500 Vdc	(W)	(W)
L50QS035	35	500	500	200kA	50kA	111	430	290	3	5
L50QS040	40	500	500	200kA	50kA	137	530	363	3	9
L50QS050	50	500	500	200kA	50kA	211	770	516	5	8
L50QS060	60	500	500	200kA	50kA	269	1,500	881	5	9
L50QS070	70	500	500	200kA	50kA	393	1,775	1,185	6	11
L50QS080	80	500	500	200kA	50kA	616	3,550	1,720	6	11
L50QS090	90	500	500	200kA	50kA	720	4,075	1,990	8	14
L50QS100	100	500	500	200kA	50kA	905	4,577	2,313	9	17
L50QS125	125	500	500	200kA	50kA	1,503	7,655	4,815	10	17
L50QS150	150	500	500	200kA	50kA	2,382	11,100	7,190	12	21
L50QS175	175	500	500	200kA	50kA	3,148	16,500	9,900	14	25
L50QS200	200	500	500	200kA	50kA	4,102	18,233	11,567	17	32
L50QS225	225	500	500	200kA	50kA	5,379	25,300	16,700	19	35
L50QS250	250	500	500	200kA	50kA	7,094	31,350	22,500	20	37
L50QS300	300	500	500	200kA	50kA	11,240	53,800	36,150	25	46
L50QS350	350	500	500	200kA	50kA	14,246	68,850	44,800	30	61
L50QS400	400	500	500	200kA	50kA	21,155	100,300	67,300	33	65
L50QS450	450	500	500	200kA	50kA	26,425	121,000	84,650	35	63
L50QS500	500	500	500	200kA	50kA	31,747	141,000	103,500	39	72
L50QS600	600	500	500	200kA	50kA	43,922	193,500	128,000	49	92
L50QS700	700	500	500	200kA	50kA	75,597	314,000	230,000	51	92
L50QS800	800	500	500	200kA	50kA	92,717	393,500	280,000	63	117

© 2023 Littelfuse, Inc.

L50QS SERIES HIGH-SPEED ROUND-BODY FUSES

Dimensions
Millimeters [inches]

Document Number: OL-L50QS000

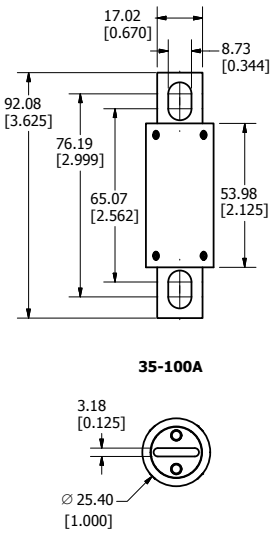

35-100A

Stud Size: M8 (5/16")
Recommended Torque: 15 Nm (132.76 in-lb)

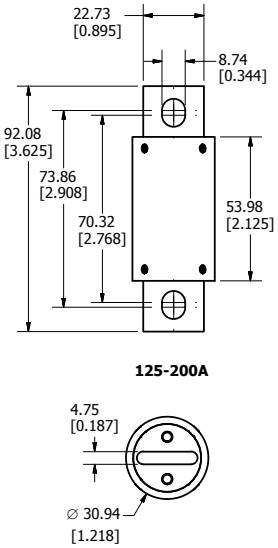

125-200A

Stud Size: M8 (5/16")
Recommended Torque: 15 Nm (132.76 in-lb)

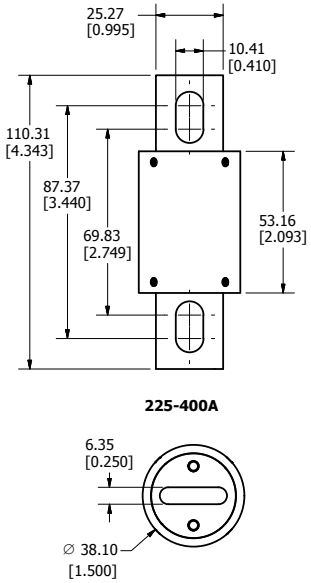

225-400A

Stud Size: M8 (5/16")
Recommended Torque: 15 Nm (132.76 in-lb)

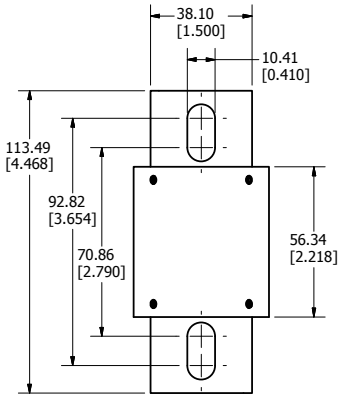

450-600A

Stud Size: M8 (5/16")
Recommended Torque: 15 Nm (132.76 in-lb)

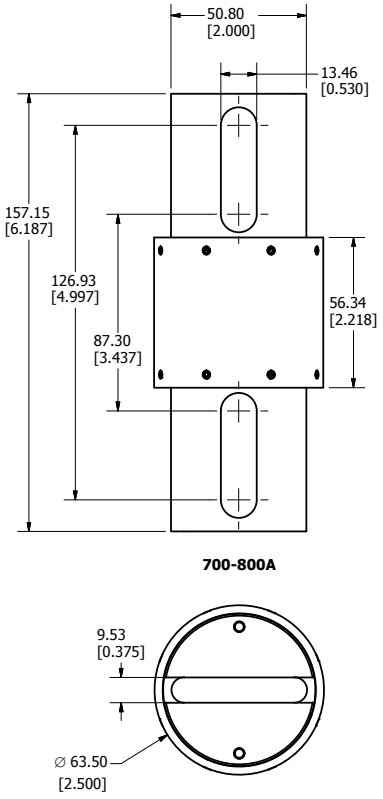

700-800A

Stud Size: M12 (½")
Recommended Torque: 54 Nm (477.94 in-lb)

L70QS SERIES HIGH-SPEED ROUND-BODY FUSES

700 V ac/dc • Very Fast Acting • 35–800 A

HF c UL us CE RoHS



Description

The L70QS series is a next generation high-speed fuse for the protection of power semiconductor devices and is designed in the traditional North American bolted style package.

L70QS series high-speed fuses are extremely current limiting and are used to protect power converters, drives and control circuit applications. Designed with lower I^2t performance characteristics, these fuses provide balanced performance to extend longevity while lowering potentially damaging heat energy to the devices being protected.

In addition L70QS series fuses have been designed with a universal mounting option to meet customer requirements for installation into a variety of application configurations

Littelfuse POWR-*SPEED* products offer optimized circuit protection at the extremely fast speed required to protect modern day, sensitive, high-power semiconductor devices. Such products are commonly found in various industries including pulp and paper industries, cranes and heavy-lifting equipment, processing industries, wastewater treatment plants and large factories and MRO facilities.

Features

- Compliance with US and Canadian requirements
- Traditional North American bolted style dimensions
- Class aR performance
- Direct bus-bar mount or stud mount design
- Halogen free, RoHS and REACH compliant

Applications

- Power converters (inverters, rectifiers)
- Power supplies
- UPS
- Variable speed drives
- Control circuits
- Soft starters

Specifications

Voltage Rating	Ac: 700 V Dc: 700 V
Amperage Rating	35–800 A
Interrupting Rating	Ac: 200 kA Dc: 50 kA
Time Constant	10 ms
Material	Body: Melamine Caps: Copper Alloy (Silver Plated)
Approvals	UL Recognized (E71611) c-UR-us (E71611)
Environmental	RoHS compliant, REACH
Country of Origin	Mexico
Operating Temperature	-55 °C to +125 °C
Storage Temperature	Up to 35 °C with relative humidity <65 %

Part Numbering System

L70 QS 700 X

Series

Body Type

Ampere Code

Package Quantity
X = 1 (225–800 A)
V = 5 (35–200 A)

SERIES	BODY TYPE	AMPERE CODE	PACKAGE QUANTITY	CATALOG NUMBER	ORDERING NUMBER
L70	QS	700	1	L70QS700	L70QS700.X

Recommended Fuse Blocks

LSCR001 (35–100 A)
LSCR002 (125–800 A)



Web Resources

Download technical documents: **Littelfuse.com/L70QS**

Note: high-speed fuses are designed for fixed installations. They are not intended for use in moving vehicle applications.

 © 2023 Littelfuse, Inc.

L70QS SERIES HIGH-SPEED ROUND-BODY FUSES

Electrical Specifications

CATALOG NUMBER	AMPERAGE RATING	VOLTAGE RATING		INTERRUPT RATING		MELTING (PRE-ARC) I^2T (A^2s)	TOTAL CLEARING I^2T (A^2s)	TOTAL CLEARING I^2T (A^2s)	WATTS LOSS AT 80 % RATED CURRENT	WATTS LOSS AT 100 % RATED CURRENT
		AC	DC	AC	DC		200 KA @ 700 V AC	50 KA @ 700 V DC	(W)	(W)
L70QS035	35	700	700	200 kA	50 kA	129	332	308	5	8
L70QS040	40	700	700	200 kA	50 kA	153	599	416	6	9
L70QS050	50	700	700	200 kA	50 kA	196	711	588	6	12
L70QS060	60	700	700	200 kA	50 kA	269	1,233	678	9	15
L70QS070	70	700	700	200 kA	50 kA	359	1,575	1,075	10	20
L70QS080	80	700	700	200 kA	50 kA	452	2,755	1,415	12	22
L70QS090	90	700	700	200 kA	50 kA	625	3,365	1,920	13	25
L70QS100	100	700	700	200 kA	50 kA	966	3,747	2,347	15	30
L70QS125	125	700	700	200 kA	50 kA	2,208	8,795	5,570	13	24
L70QS150	150	700	700	200 kA	50 kA	3,026	13,650	8,195	17	32
L70QS175	175	700	700	200 kA	50 kA	4,219	19,550	11,650	20	38
L70QS200	200	700	700	200 kA	50 kA	5,529	22,067	16,100	22	42
L70QS225	225	700	700	200 kA	50 kA	9,226	34,900	25,400	22	40
L70QS250	250	700	700	200 kA	50 kA	10,999	43,750	31,650	27	46
L70QS300	300	700	700	200 kA	50 kA	16,296	64,400	45,500	31	57
L70QS350	350	700	700	200 kA	50 kA	24,778	91,500	65,250	35	67
L70QS400	400	700	700	200 kA	50 kA	34,225	110,667	94,666	41	79
L70QS450	450	700	700	200 kA	50 kA	38,946	145,500	113,500	45	81
L70QS500	500	700	700	200 kA	50 kA	42,747	173,000	125,500	56	112
L70QS600	600	700	700	200 kA	50 kA	67,363	220,333	179,667	67	138
L70QS700	700	700	700	200 kA	50 kA	99,387	368,000	298,000	72	138
L70QS800	800	700	700	200 kA	50 kA	156,137	466,333	415,333	76	142

Ordering Information

SERIES	AMPERAGE RATING	AMPERE CODE	CATALOG NUMBER	ORDERING NUMBER	PACK QUANTITY	UPC
L70QS	35	035	L70QS035	L70QS035.V	5 Pcs/ Box	07945886015
L70QS	40	040	L70QS040	L70QS040.V	5 Pcs/ Box	07945886016
L70QS	50	050	L70QS050	L70QS050.V	5 Pcs/ Box	07945886017
L70QS	60	060	L70QS060	L70QS060.V	5 Pcs/ Box	07945886018
L70QS	70	070	L70QS070	L70QS070.V	5 Pcs/ Box	07945886019
L70QS	80	080	L70QS080	L70QS080.V	5 Pcs/ Box	07945886020
L70QS	90	090	L70QS090	L70QS090.V	5 Pcs/ Box	07945886021
L70QS	100	100	L70QS100	L70QS100.V	5 Pcs/ Box	07945886022
L70QS	125	125	L70QS125	L70QS125.V	5 Pcs/ Box	07945886023
L70QS	150	150	L70QS150	L70QS150.V	5 Pcs/ Box	07945886024
L70QS	175	175	L70QS175	L70QS175.V	5 Pcs/ Box	07945886025
L70QS	200	200	L70QS200	L70QS200.V	5 Pcs/ Box	07945886026
L70QS	225	225	L70QS225	L70QS225.X	1 Pc/ Box	07945886027
L70QS	250	250	L70QS250	L70QS250.X	1 Pc/ Box	07945886028
L70QS	300	300	L70QS300	L70QS300.X	1 Pc/ Box	07945886029
L70QS	350	350	L70QS350	L70QS350.X	1 Pc/ Box	07945886030
L70QS	400	400	L70QS400	L70QS400.X	1 Pc/ Box	07945886031
L70QS	450	450	L70QS450	L70QS450.X	1 Pc/ Box	07945886032
L70QS	500	500	L70QS500	L70QS500.X	1 Pc/ Box	07945886033
L70QS	600	600	L70QS600	L70QS600.X	1 Pc/ Box	07945886034
L70QS	700	700	L70QS700	L70QS700.X	1 Pc/ Box	07945886035
L70QS	800	800	L70QS800	L70QS800.X	1 Pc/ Box	07945886036

© 2023 Littelfuse, Inc.

L70QS SERIES HIGH-SPEED ROUND-BODY FUSES

Dimensions

Millimeters [inches]

Document Number: OL-L70QS000

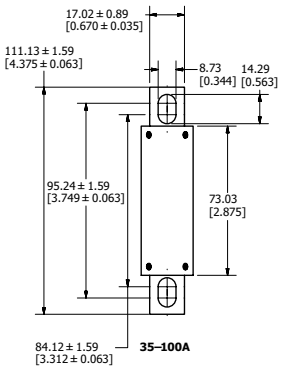

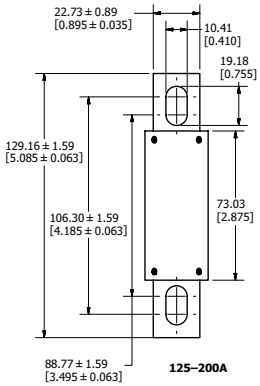

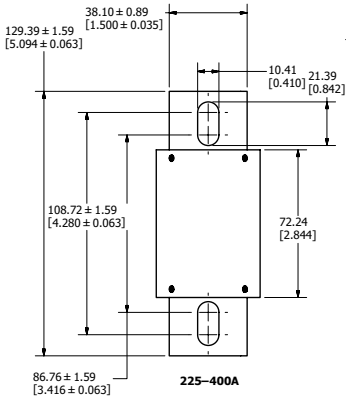

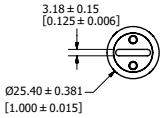

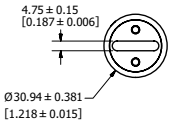

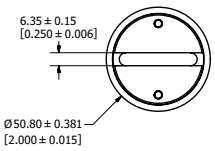

Stud Size: M8 (5/16")
Recommended Torque: 15 Nm (132.76 in-lb)

Stud Size: M8 (5/16")
Recommended Torque: 15 Nm (132.76 in-lb)

Stud Size: M8 (5/16")
Recommended Torque: 15 Nm (132.76 in-lb)

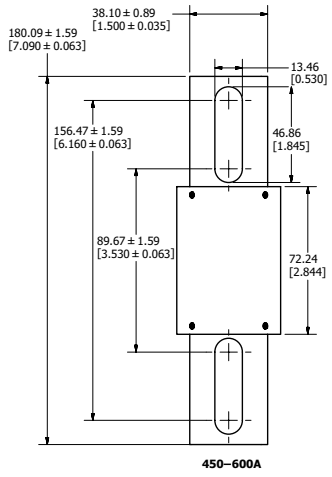

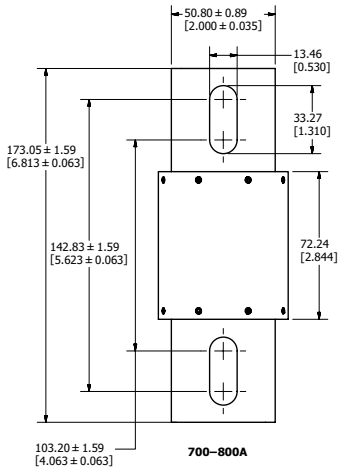

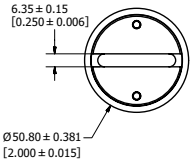

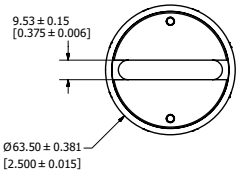

Stud Size: M12 (1/2")
Recommended Torque: 54 Nm (477.94 in-lb)

Stud Size: M12 (1/2")
Recommended Torque: 54 Nm (477.94 in-lb)

© 2023 Littelfuse, Inc.

L50S SERIES TRADITIONAL HIGH-SPEED FUSES

500 Vac • 450 Vdc • 10-800 A • Traditional Round-Body Style



Specifications

Voltage Rating	500 Vac 450 Vdc
Amperage Rating	10, 12, 15, 20, 25, 30, 35, 40, 50, 60, 70, 80, 90, 100, 125, 150, 175, 200, 225, 250, 275, 300, 350, 400, 450, 500, 550, 600, 700, 800
Interrupting Rating	AC: 200 kAIC DC: 20 kAIC
Material	Body: Melamine Terminals: Copper (silver plated)
Mounting Type	Cylindrical (10 - 30 A) Bolted Tags (35 - 800 A)
Operating Temperature	-55˚ C to +125˚ C
Storage Temperature	Up to 35˚ C with relative humidity less than 65%
Approvals	UL Recognized (File: E71611) CSA Recognized (File: LR29862)
Environmental	RoHS Compliant
Country of Origin	Mexico

Description

Littelfuse L50S Series High-Speed Fuses are designed to protect today's equipment and systems, and are manufactured with Littelfuse-developed technology that sets standards for accuracy, consistent quality, reliability, and predictable performance.

Littelfuse engineers have redefined High-Speed Fuse Technology by using advanced metallurgical, polymer, and materials research, mathematical modeling, and computerized statistical analysis.

Features/Benefits

- Extremely Current Limiting
- Low Watt Losses
- Controlled Transient Over-voltages
- UL Recognized

Applications

- AC & DC Drives
- DC Common Bus Protection
- Power Converters
- UPS
- Soft-Starters

Part Numbering System

L50S xxx .T

Series

Amp Code
Refer to Amp Code Column in Ordering Information Table

Package Quantity
X = 1
T = 10

SERIES	AMP	CATALOG NUMBER	ORDERING NUMBER
L50S	10	L50S010	L50S010.T
L50S	500	L50S500	L50S500.X

Recommended Fuse Holder

LSCR001 (35-200 A) 127
LSCR002 (225-800 A) 127

Web Resources

Download technical documents: **Littelfuse.com/L50S**

L50S SERIES TRADITIONAL HIGH-SPEED FUSES

Electrical Specifications

CATALOG NUMBER	AMPERAGE RATING	VOLTAGE RATING		INTERRUPT RATING		MELTING (PRE-ARC) I^2T (A^2s)	TOTAL CLEARING I^2T (A^2s)	TOTAL CLEARING I^2T (A^2s)	TOTAL CLEARING I^2T (A^2s)	WATTS LOSS AT 100% RATED CURRENT	WATTS LOSS AT 80% RATED CURRENT
		AC	DC	AC	DC		100 kA @ 500 Vac	200 kA @ 500 Vac	20 kA @ 450 Vdc	(W)	(W)
L50S010	10	500	450	200kA	20kA	21	112	128	85	2	1
L50S012	12	500	450	200kA	20kA	26	149	170	97	2	1
L50S015	15	500	450	200kA	20kA	34	222	250	116	2	2
L50S020	20	500	450	200kA	20kA	48	363	400	143	5	3
L50S025	25	500	450	200kA	20kA	62	528	600	170	7	4
L50S030	30	500	450	200kA	20kA	77	707	820	193	10	5
L50S035	35	500	450	200kA	20kA	130	1,120	1,210	400	6	3
L50S040	40	500	450	200kA	20kA	161	1,420	1,550	525	7	4
L50S050	50	500	450	200kA	20kA	222	2,150	2,360	867	11	6
L50S060	60	500	450	200kA	20kA	259	3,016	3,300	1,287	13	7
L50S070	70	500	450	200kA	20kA	420	4,100	4,930	1,670	17	10
L50S080	80	500	450	200kA	20kA	554	5,300	6,950	2,240	19	10
L50S090	90	500	450	200kA	20kA	677	6,750	9,500	2,900	24	13
L50S100	100	500	450	200kA	20kA	807	8,273	12,600	3,626	30	16
L50S125	125	500	450	200kA	20kA	1,290	13,100	19,000	5,150	22	12
L50S150	150	500	450	200kA	20kA	2,504	19,100	26,500	6,700	27	15
L50S175	175	500	450	200kA	20kA	3,224	26,300	35,000	8,700	33	17
L50S200	200	500	450	200kA	20kA	3,938	34,233	44,583	11,297	35	19
L50S225	225	500	450	200kA	20kA	6,034	43,500	56,000	14,750	31	17
L50S250	250	500	450	200kA	20kA	7,510	54,000	69,000	19,600	36	19
L50S275	275	500	450	200kA	20kA	9,000	65,500	82,000	25,500	41	22
L50S300	300	500	450	200kA	20kA	10,808	78,500	97,500	32,200	42	23
L50S350	350	500	450	200kA	20kA	16,500	107,000	132,000	50,100	50	28
L50S400	400	500	450	200kA	20kA	22,941	142,333	169,667	72,270	58	30
L50S450	450	500	450	200kA	20kA	29,300	178,500	208,000	95,000	58	32
L50S500	500	500	450	200kA	20kA	37,000	220,000	250,000	118,000	64	35
L50S550	550	500	450	200kA	20kA	45,851	311,667	347,333	176,766	75	41
L50S600	600	500	450	200kA	20kA	45,851	311,667	347,333	176,766	98	50
L50S700	700	500	450	200kA	20kA	82,396	460,000	622,333	289,000	96	51
L50S800	800	500	450	200kA	20kA	115,656	647,667	687,500	465,590	118	60

Dimensions

AMPERE RATING	FIGURE NO.	DIMENSIONS INCHES (MM)							
		A	B	C	D	E	F	G	H
10 – 30	1	2 (50.8)	—	½ (12.7)	9/16 (14.3)	—	—	—	—
31 – 60	2	1 5/8 (41.3)	2¼ (57.2)	2½ (63.5)	3 3/16 (81.0)	13/16 (20.6)	23/32 (18.3)	11/32 (8.7)	⅛ (3.2)
61 – 100	3	2⅛ (54.0)	2 11/16 (68.3)	3 (76.2)	3⅝ (92.1)	1 (25.4)	.670 (17.0)	11/32 (8.7)	⅛ (3.2)
101 – 200	3	2⅛ (54.0)	2 13/16 (71.4)	2 15/16 (74.6)	3⅝ (92.1)	17/32 (31.0)	.895 (22.7)	5/16 (7.9)	3/16 (4.75)
201 – 400	3	2 3/32 (53.2)	2 25/32 (70.6)	3 13/32 (86.5)	4 11/32 (110.3)	1½ (38.1)	1 (25.4)	1 3/32 (10.3)	¼ (6.4)
401 – 600	3	2 7/32 (56.4)	2 29/32 (73.8)	3 17/32 (89.7)	4 15/32 (113.5)	2 (50.8)	1½ (38.1)	1 3/32 (10.3)	¼ (6.4)
601 – 800	3	2 7/32 (56.4)	4 9/32 (108.7)	4⅝ (117.5)	6 15/32 (164.3)	2½ (63.5)	2 (50.8)	1 7/32 (13.5)	3/8 (9.5)

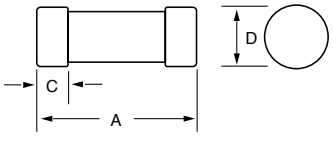

Figure 1

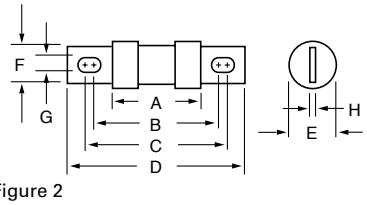

Figure 2

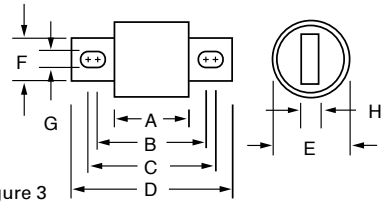

Figure 3

© 2023 Littelfuse, Inc.

L70S SERIES TRADITIONAL HIGH-SPEED FUSES

700 Vac • 650 Vdc • 10-800 A • Traditional Round-Body Style



Specifications

Voltage Rating	700 Vac 650 Vdc
Amperage Rating	10, 15, 20, 25, 30, 35, 40, 50, 60, 70, 80, 90, 100, 125, 150, 175, 200, 225, 250, 300, 350, 400, 450, 500, 600, 700, 800
Interrupting Rating	AC: 200 kAIC DC: 20 kAIC
Material	Body: Melamine Terminals: Copper (silver plated)
Mounting Type	Cylindrical (10 - 30 A) Bolted Tags (35 - 800 A)
Operating Temperature	-55˚ C to +125˚ C
Storage Temperature	Up to 35˚ C with relative humidity less than 65%
Approvals	UL Recognized (File: E71611) CSA Recognized (File: LR29862)
Environmental	RoHS Compliant
Country of Origin	Mexico

Description

Littelfuse L70S Series High-Speed Fuses are designed to protect today's equipment and systems, and are manufactured with Littelfuse-developed technology that sets standards for accuracy, consistent quality, reliability, and predictable performance.

Littelfuse engineers have redefined High-Speed Fuse technology by using advanced metallurgical, polymer, and materials research, mathematical modeling, and computerized statistical analysis.

Features/Benefits

- Extremely Current Limiting
- Low Watt Losses
- Controlled Transient Over-voltages
- UL Recognized

Applications

- AC & DC Drives
- DC Common Bus Protection
- Power Converters
- UPS
- Soft-Starters

Part Numbering System

L70S xxx .T

Series

Amp Code
Refer to Amp Code Column in Ordering Information Table

Package Quantity
X = 1
T = 10

SERIES	AMP	CATALOG NUMBER	ORDERING NUMBER
L70S	10	L70S010	L70S010.T
L70S	500	L70S500	L70S500.X

Recommended Fuse Block

LSCR001 (35-200 A) 127
LSCR002 (225-800 A) 127

Web Resources

Download technical documents: **Littelfuse.com/L70S**

L70S SERIES TRADITIONAL HIGH-SPEED FUSES

Electrical Specifications

CATALOG NUMBER	AMPERAGE RATING	VOLTAGE RATING		INTERRUPT RATING		MELTING (PRE-ARC) I^2T (A^2s)	TOTAL CLEARING I^2T (A^2s)	TOTAL CLEARING I^2T (A^2s)	TOTAL CLEARING I^2T (A^2s)	WATTS LOSS AT 100% RATED CURRENT	WATTS LOSS AT 80% RATED CURRENT
		AC	DC	AC	DC		100 kA @ 700 Vac	200 kA @ 700 Vac	20 kA @ 650 Vdc	(W)	(W)
L70S010	10	700	650	200kA	20kA	21	160	173	346	2	1
L70S015	15	700	650	200kA	20kA	34	330	355	270	2	2
L70S020	20	700	650	200kA	20kA	48	550	599	300	5	2
L70S025	25	700	650	200kA	20kA	62	810	900	340	7	4
L70S030	30	700	650	200kA	20kA	77	1,130	1,220	417	10	5
L70S035	35	700	650	200kA	20kA	110	1,470	1,500	500	12	6
L70S040	40	700	650	200kA	20kA	150	1,830	2,000	660	13	7
L70S050	50	700	650	200kA	20kA	250	2,670	3,200	1,070	16	9
L70S060	60	700	650	200kA	20kA	380	3,646	4,674	1,572	18	9
L70S070	70	700	650	200kA	20kA	545	4,800	6,000	1,970	16	9
L70S080	80	700	650	200kA	20kA	745	6,180	7,550	2,380	21	11
L70S090	90	700	650	200kA	20kA	990	7,650	9,250	2,830	25	13
L70S100	100	700	650	200kA	20kA	1,266	9,407	11,117	3,266	29	14
L70S125	125	700	650	200kA	20kA	2,150	14,700	17,550	4,900	33	17
L70S150	150	700	650	200kA	20kA	3,280	21,250	25,700	6,800	51	24
L70S175	175	700	650	200kA	20kA	4,700	28,750	34,800	9,000	63	28
L70S200	200	700	650	200kA	20kA	6,411	37,300	45,583	11,447	75	33
L70S225	225	700	650	200kA	20kA	8,000	46,500	57,000	16,000	43	24
L70S250	250	700	650	200kA	20kA	9,900	58,000	69,500	22,000	49	27
L70S300	300	700	650	200kA	20kA	14,000	83,000	97,700	37,500	60	33
L70S350	350	700	650	200kA	20kA	19,000	113,000	131,000	59,000	71	36
L70S400	400	700	650	200kA	20kA	24,373	147,290	169,000	87,875	107	49
L70S450	450	700	650	200kA	20kA	33,000	191,000	219,000	119,000	85	47
L70S500	500	700	650	200kA	20kA	44,200	240,000	275,000	155,000	92	49
L70S600	600	700	650	200kA	20kA	72,000	370,250	405,000	246,182	106	56
L70S700	700	700	650	200kA	20kA	110,000	526,000	573,000	255,000	128	67
L70S800	800	700	650	200kA	20kA	157,082	735,330	762,333	262,949	156	78

Dimensions

AMPERE RATING	FIGURE NO.	DIMENSIONS INCHES (MM)								
		A	B	C	D	E	F	G	H	J
10 – 30	1	2 (50.8)	—	½ (12.7)	9/16 (14.3)	—	—	—	—	—
31 – 60	2	2 7/8 (73.0)	3 7/16 (87.3)	3¾ (95.2)	4 3/8 (111.1)	1 (25.4)	43/64 (17.1)	11/32 (8.7)	1/8 (3.2)	—
61 – 100	2	2 7/8 (73.0)	3 9/16 (90.5)	3 11/16 (93.7)	4 3/8 (111.1)	1 7/32 (31.0)	29/32 (22.9)	5/16 (7.9)	3/16 (4.8)	—
101 – 200	2	2 27/32 (72.2)	3 17/32 (89.7)	4 5/32 (105.6)	5 3/32 (129.4)	1½ (38.1)	1 (25.4)	13/32 (10.3)	¼ (6.4)	—
201 – 400	2	2 27/32 (72.2)	3 17/32 (89.7)	4 5/32 (105.6)	5 3/32 (129.4)	2 (50.8)	1½ (38.1)	13/32 (10.3)	¼ (6.4)	—
401 – 600	2	2 27/32 (72.2)	4 29/32 (124.6)	5¼ (133.4)	7 3/32 (180.2)	2½ (63.5)	2 (50.8)	17/32 (13.5)	3/8 (9.5)	—
601 – 800	3	3 5/16 (84.1)	5 5/16 (134.9)	6 13/16(173.0)	—	2 7/8 (73.0)	2 (50.8)	5/8 (15.9)	3/8 (9.5)	5/16 (7.9)

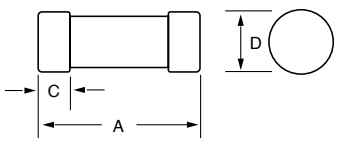

Figure 1

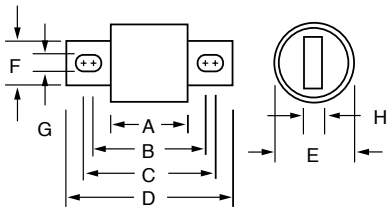

Figure 2

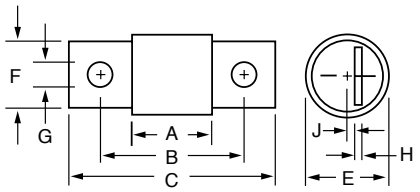

Figure 3

© 2023 Littelfuse, Inc.

L15S SERIES TRADITIONAL HIGH-SPEED FUSES

150 V ac • Very Fast-Acting • 1–1000 A



Specifications

Voltage Ratings	Ac: 150 V Dc: 100 V – 150 V
Ampere Range	1 – 1000 A
Interrupting Rating	Ac: 100 kA
	Dc: 20 kA Self Certified
Approvals	UL Recognized (File: E71611) CSA Recognized (File: LR29862)
Time Constant	10 ms
Material	Body: Melamine
	Cap: Copper Alloy (Silver Plated)
Environmental	RoHS
Country of Origin	Mexico
Operating Temperature	-55 °C to +125 °C
Storage Temperature	Up to 35 °C with Relative Humidity <65 %

Description

The L15S series is a traditional North American Bolted style high-speed fuse for protection of power semiconductor devices that are rated up to 150 V ac and up to 150 V dc Littelfuse POWR-*SPEED*® products offer optimized circuit protection at the extremely fast speed required to protect power semiconductor devices such as silicon controlled rectifiers (SCR's), diodes, thyristors, triacs, transistors, and similar solid-state devices. These devices are used in power equipment including variable speed drives, power rectifiers, UPS systems, dc power supplies, and in a wide range of electronic equipment. May be used wherever extremely fast-acting, current-limiting fuses with no time delay are required.

Features/Benefits

- Compliance with US and Canadian Requirements
- Traditional North American Bolted Style dimensions
- Class aR performance
- Direct bus-bar mount or stud mount design
- RoHS Compliant

Applications

- Power Converters (Inverters, Rectifiers, UPS)
- Power Supplies
- Industrial Heaters
- Variable Speed Drives
- Battery Chargers
- Soft Starters

Part Numbering System

L15S xxx .T

Series

Amperage
(3 digit minimum)

Package Quantity
T = 10 (1 A – 450 A)
V = 5 (500 A – 1000 A)

SERIES	AMPERAGE	CATALOG NUMBER	ORDERING NUMBER
L15S	005	L15S005	L15S005.T
L15S	500	L15S500	L15S500.V
L15S	1000	L15S1000	L15S1000V

Recommended Fuse Holders

1LFS101/1LFS102
LSCR001/LSCR002

Web Resources

For additional information, visit: **Littelfuse.com/high-speed**

Note: High-Speed fuses are designed for fixed installations. They are not intended for use in moving vehicle applications.

© 2023 Littelfuse, Inc.

L15S SERIES TRADITIONAL HIGH-SPEED FUSES

Electrical Specifications

CATALOG NUMBER	AMPERAGE RATING	VOLTAGE RATING		INTERRUPT RATING	
		AC	DC	AC	DC
L15S001	1	150	150	100 kA	20 kA
L15S002	2	150	150	100 kA	20 kA
L15S003	3	150	150	100 kA	20 kA
L15S004	4	150	150	100 kA	20 kA
L15S005	5	150	150	100 kA	20 kA
L15S006	6	150	150	100 kA	20 kA
L15S007	7	150	150	100 kA	20 kA
L15S008	8	150	150	100 kA	20 kA
L15S009	9	150	150	100 kA	20 kA
L15S010	10	150	150	100 kA	20 kA
L15S012	12	150	150	100 kA	20 kA
L15S015	15	150	150	100 kA	20 kA
L15S020	20	150	150	100 kA	20 kA
L15S025	25	150	150	100 kA	20 kA
L15S035	35	150	150	100 kA	20 kA
L15S040	40	150	150	100 kA	20 kA
L15S045	45	150	150	100 kA	20 kA
L15S050	50	150	150	100 kA	20 kA
L15S060	60	150	150	100 kA	20 kA
L15S070	70	150	100	100 kA	20 kA
L15S080	80	150	100	100 kA	20 kA
L15S090	90	150	100	100 kA	20 kA
L15S100	100	150	100	100 kA	20 kA
L15S125	125	150	100	100 kA	20 kA
L15S150	150	150	100	100 kA	20 kA
L15S200	200	150	100	100 kA	20 kA
L15S250	250	150	100	100 kA	20 kA
L15S300	300	150	100	100 kA	20 kA
L15S350	350	150	100	100 kA	20 kA
L15S400	400	150	100	100 kA	20 kA
L15S450	450	150	100	100 kA	20 kA
L15S500	500	150	100	100 kA	20 kA
L15S600	600	150	100	100 kA	20 kA
L15S800	800	150	100	100 kA	20 kA
L15S1000	1000	150	100	100 kA	20 kA

© 2023 Littelfuse, Inc.

L15S SERIES TRADITIONAL HIGH-SPEED FUSES

Ordering Information

SERIES	AMPERAGE	AMPERE CODE	CATALOG NUMBER	ORDERING NUMBER	PACK QUANTITY	UPC
L15S	1	001.	L15S001	L15S001.T	10 Pcs/Box	07945800218
L15S	2	002.	L15S002	L15S002.T	10 Pcs/Box	07945800219
L15S	3	003.	L15S003	L15S003.T	10 Pcs/Box	07945800220
L15S	4	004.	L15S004	L15S004.T	10 Pcs/Box	07945800221
L15S	5	005.	L15S005	L15S005.T	10 Pcs/Box	07945800222
L15S	6	006.	L15S006	L15S006.T	10 Pcs/Box	07945800223
L15S	7	007.	L15S007	L15S007.T	10 Pcs/Box	07945800224
L15S	8	008.	L15S008	L15S008.T	10 Pcs/Box	07945800225
L15S	9	009.	L15S009	L15S009.T	10 Pcs/Box	07945800226
L15S	10	010.	L15S010	L15S010.T	10 Pcs/Box	07945800227
L15S	12	012.	L15S012	L15S012.T	10 Pcs/Box	07945800228
L15S	15	015.	L15S015	L15S015.T	10 Pcs/Box	07945800229
L15S	20	020.	L15S020	L15S020.T	10 Pcs/Box	07945800230
L15S	25	025.	L15S025	L15S025.T	10 Pcs/Box	07945800231
L15S	30	030.	L15S030	L15S030.T	10 Pcs/Box	07945800232
L15S	35	035.	L15S035	L15S035.T	10 Pcs/Box	07945800233
L15S	40	040.	L15S040	L15S040.T	10 Pcs/Box	07945800234
L15S	45	045.	L15S045	L15S045.T	10 Pcs/Box	07945800235
L15S	50	050.	L15S050	L15S050.T	10 Pcs/Box	07945800236
L15S	60	060.	L15S060	L15S060.T	10 Pcs/Box	07945800237
L15S	70	070.	L15S070	L15S070.T	10 Pcs/Box	07945800238
L15S	80	080.	L15S080	L15S080.T	10 Pcs/Box	07945800239
L15S	90	090.	L15S090	L15S090.T	10 Pcs/Box	07945800240
L15S	100	100.	L15S100	L15S100.T	10 Pcs/Box	07945800241
L15S	125	125.	L15S125	L15S125.T	10 Pcs/Box	07945800242
L15S	150	150.	L15S150	L15S150.T	10 Pcs/Box	07945800243
L15S	200	200.	L15S200	L15S200.T	10 Pcs/Box	07945800244
L15S	250	250.	L15S250	L15S250.T	10 Pcs/Box	07945800245
L15S	300	300.	L15S300	L15S300.T	10 Pcs/Box	07945800246
L15S	350	350.	L15S350	L15S350.T	10 Pcs/Box	07945800247
L15S	400	400.	L15S400	L15S400.T	10 Pcs/Box	07945800248
L15S	450	450.	L15S450	L15S450.T	10 Pcs/Box	07945800249
L15S	500	500.	L15S500	L15S500.V	5 Pcs/Box	07945800250
L15S	600	600.	L15S600	L15S600.V	5 Pcs/Box	07945800251
L15S	800	800.	L15S800	L15S800.V	5 Pcs/Box	07945800252
L15S	1000	1000	L15S1000	L15S1000V	5 Pcs/Box	07945800253

© 2023 Littelfuse, Inc.

L15S SERIES TRADITIONAL HIGH-SPEED FUSES

Dimensions

AMPERE RATING	FIG. NO.	DIMENSIONS INCHES (MM)							
		A	B	C	D	E	F	G	H
1 – 30	1	1½ (38.1)	—	⅜ (9.5)	13/32 (10.3)	—	—	—	—
31 – 60	1	2 (50.8)	—	⅝ (15.9)	13/16 (20.6)	—	—	—	—
61 – 450	2	15/32 (29.4)	1⅞ (47.6)	2 3/16 (55.6)	2 21/32 (67.5)	1 (25.4)	43/64 (17.1)	5/16 (7.9)	3/16 (4.8)
451 – 1000	2	1¼ (31.8)	1 15/16 (49.2)	2 9/16 (65.1)	3½ (88.9)	1½ (38.1)	1 (25.4)	13/32 (10.3)	¼ (6.4)

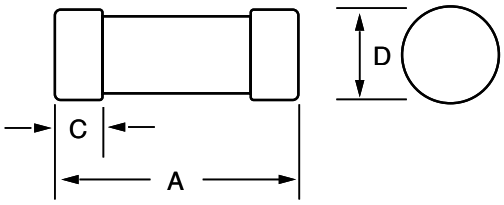

Figure 1

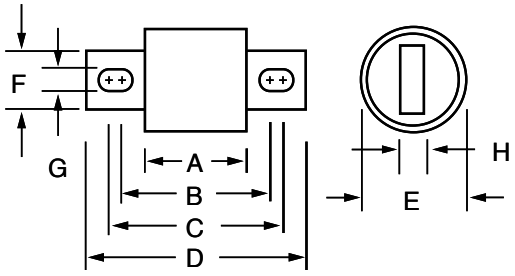

Figure 2

© 2023 Littelfuse, Inc.

L25S SERIES TRADITIONAL HIGH-SPEED FUSES

250 V ac • Very Fast-Acting • 1–800 A



Description

The L25S Series is a traditional North American Bolted style high-speed fuse for protection of power semiconductor devices that are rated up to 250 V ac and 200 V dc.

Littelfuse POWR-*SPEED*® products offer optimized circuit protection at the extremely fast speed required to protect power semiconductor devices such as silicon controlled rectifiers (SCR's), diodes, thyristors, triacs, transistors, and similar solid-state devices. These devices are used in power equipment including variable speed drives, power rectifiers, UPS systems, dc power supplies, and in a wide range of electronic equipment. May be used wherever extremely fast-acting, current-limiting fuses are used with no time delay required.

Features/Benefits

- Compliance with US and Canadian requirements
- Traditional North American Bolted Style dimensions
- Class aR performance
- Direct bus-bar mount or stud mount design
- RoHS compliant applications

Applications

- Power converters (inverters, rectifiers, UPS)
- Power supplies
- Industrial heaters
- Variable speed drives
- Battery chargers
- Soft starters

Specifications

Voltage Ratings	Ac: 250 V Dc: 200 V–250 V
Ampere Range	1 - 800 A
Interrupting Rating	Ac: 200 kA Dc: 20 kA Self Certified
Approvals	UL Recognized (File: E71611) CSA Recognized (File: LR29862)
Time Constant	10ms
Material	Body: Melamine Caps: Copper Alloy (Silver Plated)
Environmental	RoHS
Country of Origin	Mexico
Operating Temperature	-55 °C to +125 °C
Storage Temperature	Up to 35 °C with Relative Humidity <65 %

Part Numbering System

L25S xxx .T

Series

Amperage
(3 digit minimum)

Package Quantity
T = (1 A – 60 A)
V = (70 A – 800 A)

SERIES	AMPERAGE	CATALOG NUMBER	ORDERING NUMBER
L25S	1	L25S001	L25S001.T
L25S	100	L25S100	L25S100.V

Recommended Fuse Holders

1LFS101/1LFS102
LSCR001/LSCR002

Web Resources

For additional information, visit: **Littelfuse.com/high-speed**
Note: High-Speed fuses are designed for fixed installations. They are not intended for use in moving vehicle applications.

© 2023 Littelfuse, Inc.

L25S SERIES TRADITIONAL HIGH-SPEED FUSES

Electrical Specifications

CATALOG NUMBER	AMPERAGE RATING	VOLTAGE RATING		INTERRUPT RATING	
		AC	DC	AC	DC
L25S001	1	250	250	200 kA	20 kA
L25S002	2	250	250	200 kA	20 kA
L25S003	3	250	250	200 kA	20 kA
L25S004	4	250	250	200 kA	20 kA
L25S005	5	250	250	200 kA	20 kA
L25S006	6	250	250	200 kA	20 kA
L25S008	8	250	250	200 kA	20 kA
L25S010	10	250	250	200 kA	20 kA
L25S012	12	250	250	200 kA	20 kA
L25S015	15	250	250	200 kA	20 kA
L25S020	20	250	250	200 kA	20 kA
L25S025	25	250	250	200 kA	20 kA
L25S030	30	250	250	200 kA	20 kA
L25S035	35	250	250	200 kA	20 kA
L25S040	40	250	250	200 kA	20 kA
L25S045	45	250	250	200 kA	20 kA
L25S050	50	250	250	200 kA	20 kA
L25S060	60	250	250	200 kA	20 kA
L25S070	70	250	250	200 kA	20 kA
L25S080	80	250	250	200 kA	20 kA
L25S090	90	250	250	200 kA	20 kA
L25S100	100	250	250	200 kA	20 kA
L25S125	125	250	250	200 kA	20 kA
L25S150	150	250	250	200 kA	20 kA
L25S175	175	250	250	200 kA	20 kA
L25S200	200	250	250	200 kA	20 kA
L25S225	225	250	200	200 kA	20 kA
L25S250	250	250	200	200 kA	20 kA
L25S275	275	250	200	200 kA	20 kA
L25S300	300	250	200	200 kA	20 kA
L25S350	350	250	200	200 kA	20 kA
L25S400	400	250	200	200 kA	20 kA
L25S450	450	250	200	200 kA	20 kA
L25S500	500	250	200	200 kA	20 kA
L25S600	600	250	200	200 kA	20 kA
L25S700	700	250	200	200 kA	20 kA
L25S800	800	250	200	200 kA	20 kA

© 2023 Littelfuse, Inc.

L25S SERIES TRADITIONAL HIGH-SPEED FUSES

Ordering Information

SERIES	AMPERAGE	AMPERE CODE	CATALOG NUMBER	ORDERING NUMBER	PACK QUANTITY	UPC
L25S	1	001.	L25S001	L25S001.T	10 Pcs/Box	07945884001
L25S	2	002.	L25S002	L25S002.T	10 Pcs/Box	07945884002
L25S	3	003.	L25S003	L25S003.T	10 Pcs/Box	07945884003
L25S	4	004.	L25S004	L25S004.T	10 Pcs/Box	07945884004
L25S	5	005.	L25S005	L25S005.T	10 Pcs/Box	07945884005
L25S	6	006.	L25S006	L25S006.T	10 Pcs/Box	07945884006
L25S	8	008.	L25S008	L25S008.T	10 Pcs/Box	07945884008
L25S	10	010.	L25S010	L25S010.T	10 Pcs/Box	07945884010
L25S	12	012.	L25S012	L25S012.T	10 Pcs/Box	07945884012
L25S	15	015.	L25S015	L25S015.T	10 Pcs/Box	07945884015
L25S	20	020.	L25S020	L25S020.T	10 Pcs/Box	07945884020
L25S	25	025.	L25S025	L25S025.T	10 Pcs/Box	07945884025
L25S	30	030.	L25S030	L25S030.T	10 Pcs/Box	07945884030
L25S	35	035.	L25S035	L25S035.T	10 Pcs/Box	07945884035
L25S	40	040.	L25S040	L25S040.T	10 Pcs/Box	07945884040
L25S	45	045.	L25S045	L25S045.T	10 Pcs/Box	07945884045
L25S	50	050.	L25S050	L25S050.T	10 Pcs/Box	07945884050
L25S	60	060.	L25S060	L25S060.T	10 Pcs/Box	07945884060
L25S	70	070.	L25S070	L25S070.V	5 Pcs/Box	07945884070
L25S	80	080.	L25S080	L25S080.V	5 Pcs/Box	07945884080
L25S	90	090.	L25S090	L25S090.V	5 Pcs/Box	07945884090
L25S	100	100.	L25S100	L25S100.V	5 Pcs/Box	07945884100
L25S	125	125.	L25S125	L25S125.V	5 Pcs/Box	07945884125
L25S	150	150.	L25S150	L25S150.V	5 Pcs/Box	07945884150
L25S	175	175.	L25S175	L25S175.V	5 Pcs/Box	07945884175
L25S	200	200.	L25S200	L25S200.V	5 Pcs/Box	07945884200
L25S	225	225.	L25S225	L25S225.V	5 Pcs/Box	07945884225
L25S	250	250.	L25S250	L25S250.V	5 Pcs/Box	07945884250
L25S	275	275.	L25S275	L25S275.V	5 Pcs/Box	07945884275
L25S	300	300.	L25S300	L25S300.V	5 Pcs/Box	07945884300
L25S	350	350.	L25S350	L25S350.V	5 Pcs/Box	07945884350
L25S	400	400.	L25S400	L25S400.V	5 Pcs/Box	07945884400
L25S	450	450.	L25S450	L25S450.V	5 Pcs/Box	07945884450
L25S	500	500.	L25S500	L25S500.V	5 Pcs/Box	07945884500
L25S	600	600.	L25S600	L25S600.V	5 Pcs/Box	07945884600
L25S	700	700.	L25S700	L25S700.V	5 Pcs/Box	07945884700
L25S	800	800.	L25S800	L25S800.V	5 Pcs/Box	07945884800

Note: High-Speed fuses are designed for fixed installations. They are not intended for use in moving vehicle applications.

© 2023 Littelfuse, Inc.

L25S SERIES TRADITIONAL HIGH-SPEED FUSES

Dimensions

AMPERE RATING	FIG. NO.	DIMENSIONS INCHES (MM)							
		A	B	C	D	E	F	G	H
1 – 30	1	2 (50.8)	—	½ (12.7)	9/16 (14.3)	—	—	—	—
31 – 60	2	1⅝ (41.3)	2¼ (57.2)	2½ (63.5)	3 3/16 (81.0)	13/16 (20.6)	23/32 (18.3)	11/32 (8.7)	⅛ (3.2)
61 – 200	3	1⅝ (41.3)	2 5/16 (58.7)	2 7/16 (61.9)	3⅛ (79.4)	1 7/32 (31.0)	1 (25.4)	5/16 (7.9)	3/16 (4.8)
201 – 700	3	1 19/32 (40.5)	2 9/32 (57.9)	2 29/32 (73.8)	3 27/32 (97.6)	1½ (38.1)	1 (25.4)	13/32 (10.3)	¼ (6.4)
701 – 800	3	1 19/32 (40.5)	2 9/32 (57.9)	2 29/32 (73.8)	3 27/32 (97.6)	2 (50.8)	1½ (38.1)	13/32 (10.3)	¼ (6.4)

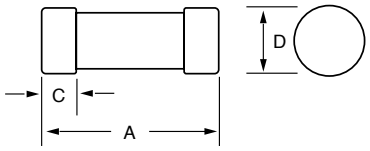

Figure 1

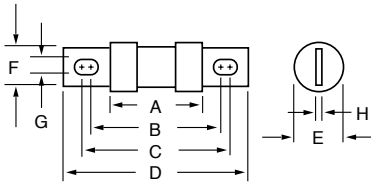

Figure 2

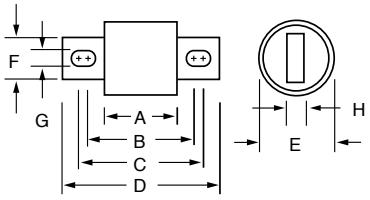

Figure 3

Note: High-Speed fuses are designed for fixed installations. They are not intended for use in moving vehicle applications.

© 2023 Littelfuse, Inc.

L60S/KLC SERIES TRADITIONAL HIGH-SPEED FUSES

600 V ac • Very Fast-Acting • 1–800 A



KLC Series

L60S Series

Description

The L60S and KLC series is a traditional North American style high-speed fuse for protection of power semiconductor devices that are rated up to 600 V ac. These fuse series are typically used for replacement purposes only. For new designs L70QS series is recommended.

Features/Benefits

- Compliance with US and Canadian requirements
- Traditional North American cylindrical & bolted style dimensions
- Class aR performance

Applications

- Small power converters
- Power supplies
- Control circuits

Specifications

Voltage Rating	600 V ac
Ampere Range	1–800 A
Interrupting Rating	200 kA rms
Approvals	UL Recognized (File: E71611) CSA Recognized (File: LR29862)
Country of Origin	Mexico
Operating Temperature	-55 °C to +125 °C
Storage Temperature	Up to 35 °C with Relative Humidity <65 %

Part Numbering System

xxxx xxx .X

Series
L60S
KLC

Amp Code
Refer to Amp Code Column in Ordering Information Table

Package Quantity
X = 1 (110–80 0A)
V = 5 (70–100 A)
T = 10 (1–60 A)

Recommended Fuse Holders

1LFS101/1LFS102
LSCR001/LSCR002

Web Resources

For additional information, visit: **Littelfuse.com/high-speed**

Ordering Information

See the next two pages.

© 2023 Littelfuse, Inc.

L60S/KLC SERIES TRADITIONAL HIGH-SPEED FUSES

Ordering Information

L60S SERIES						
SERIES	AMPERAGE	AMPERE CODE	CATALOG NUMBER	ORDERING NUMBER	PACK QUANTITY	UPC
L60S	1	001.	L60S001	L60S001.T	10 Pcs/Box	07945810100
L60S	2	002.	L60S002	L60S002.T	10 Pcs/Box	07945810101
L60S	3	003.	L60S003	L60S003.T	10 Pcs/Box	07945810102
L60S	4	004.	L60S004	L60S004.T	10 Pcs/Box	07945810103
L60S	5	005.	L60S005	L60S005.T	10 Pcs/Box	07945810104
L60S	6	006.	L60S006	L60S006.T	10 Pcs/Box	07945810105
L60S	8	008.	L60S008	L60S008.T	10 Pcs/Box	07945810107
L60S	10	010.	L60S010	L60S010.T	10 Pcs/Box	07945810108
L60S	12	012.	L60S012	L60S012.T	10 Pcs/Box	07945810109
L60S	15	015.	L60S015	L60S015.T	10 Pcs/Box	07945810110
L60S	17.5	17.5	L60S17.5	L60S17.5T	10 Pcs/Box	07945810135
L60S	20	020.	L60S020	L60S020.T	10 Pcs/Box	07945810111
L60S	25	025.	L60S025	L60S025.T	10 Pcs/Box	07945810112
L60S	30	030.	L60S030	L60S030.T	10 Pcs/Box	07945810113
L60S	35	035.	L60S035	L60S035.T	10 Pcs/Box	07945810114
L60S	40	040.	L60S040	L60S040.T	10 Pcs/Box	07945810115
L60S	45	045.	L60S045	L60S045.T	10 Pcs/Box	07945810116
L60S	50	050.	L60S050	L60S050.T	10 Pcs/Box	07945810117
L60S	60	060.	L60S060	L60S060.T	10 Pcs/Box	07945810118
L60S	70	070.	L60S070	L60S070.V	5 Pcs/Box	07945810119
L60S	80	080.	L60S080	L60S080.V	5 Pcs/Box	07945810120
L60S	90	090.	L60S090	L60S090.V	5 Pcs/Box	07945810121
L60S	100	100.	L60S100	L60S100.V	5 Pcs/Box	07945810122
L60S	125	125.	L60S125	L60S125.X	1 Pcs/Box	07945810123
L60S	150	150.	L60S150	L60S150.X	1 Pcs/Box	07945810124
L60S	175	175.	L60S175	L60S175.X	1 Pcs/Box	07945810125
L60S	200	200.	L60S200	L60S200.X	1 Pcs/Box	07945810126
L60S	225	225.	L60S225	L60S225.X	1 Pcs/Box	07945810137
L60S	250	250.	L60S250	L60S250.X	1 Pcs/Box	07945810127
L60S	300	300.	L60S300	L60S300.X	1 Pcs/Box	07945810128
L60S	350	350.	L60S350	L60S350.X	1 Pcs/Box	07945810129
L60S	400	400.	L60S400	L60S400.X	1 Pcs/Box	07945810130
L60S	450	450.	L60S450	L60S450.X	1 Pcs/Box	07945810131
L60S	500	500.	L60S500	L60S500.X	1 Pcs/Box	07945810132
L60S	600	600.	L60S600	L60S600.X	1 Pcs/Box	07945810133
L60S	700	700.	L60S700	L60S700.X	1 Pcs/Box	07945810136
L60S	800	800.	L60S800	L60S800.X	1 Pcs/Box	07945810134

Note: High-Speed fuses are designed for fixed installations. They are not intended for use in moving vehicle applications.

© 2023 Littelfuse, Inc.

L60S/KLC SERIES TRADITIONAL HIGH-SPEED FUSES

Ordering Information

KLC* SERIES						
SERIES	AMPERAGE	AMPERE CODE	CATALOG NUMBER	ORDERING NUMBER	PACK QUANTITY	UPC
KLC	1	001.	KLC001	0KLC001.T	10 Pcs/Box	07945823031
KLC	2	002.	KLC002	0KLC002.T	10 Pcs/Box	07945823041
KLC	3	003.	KLC003	0KLC003.T	10 Pcs/Box	07945823047
KLC	4	004.	KLC004	0KLC004.T	10 Pcs/Box	07945823053
KLC	5	005.	KLC005	0KLC005.T	10 Pcs/Box	07945823055
KLC	6	006.	KLC006	0KLC006.T	10 Pcs/Box	07945823058
KLC	7	007.	KLC007	0KLC007.T	10 Pcs/Box	07945823061
KLC	8	008.	KLC008	0KLC008.T	10 Pcs/Box	07945823063
KLC	10	010.	KLC010	0KLC010.T	10 Pcs/Box	07945823065
KLC	12	012.	KLC012	0KLC012.T	10 Pcs/Box	07945823066
KLC	15	015.	KLC015	0KLC015.T	10 Pcs/Box	07945823068
KLC	17.5	17.5	KLC17.5	0KLC17.5T	10 Pcs/Box	07945823069
KLC	20	020.	KLC020	0KLC020.T	10 Pcs/Box	07945823071
KLC	25	025.	KLC025	0KLC025.T	10 Pcs/Box	07945823072
KLC	30	030.	KLC030	0KLC030.T	10 Pcs/Box	07945823073
KLC	35	035.	KLC035	0KLC035.T	10 Pcs/Box	07945823074
KLC	40	040.	KLC040	0KLC040.T	10 Pcs/Box	07945823075
KLC	45	045.	KLC045	0KLC045.T	10 Pcs/Box	07945823076
KLC	50	050.	KLC050	0KLC050.T	10 Pcs/Box	07945823077
KLC	60	060.	KLC060	0KLC060.T	10 Pcs/Box	07945823078
KLC	70	070.	KLC070	0KLC070.V	5 Pcs/Box	07945823079
KLC	80	080.	KLC080	0KLC080.V	5 Pcs/Box	07945823080
KLC	90	090.	KLC090	0KLC090.V	5 Pcs/Box	07945823081
KLC	100	100.	KLC100	0KLC100.V	5 Pcs/Box	07945823082
KLC	110	110.	KLC110	0KLC110.X	1 Pcs/Box	07945823083
KLC	125	125.	KLC125	0KLC125.X	1 Pcs/Box	07945823084
KLC	150	150.	KLC150	0KLC150.X	1 Pcs/Box	07945823086
KLC	175	175.	KLC175	0KLC175.X	1 Pcs/Box	07945823087
KLC	200	200.	KLC200	0KLC200.X	1 Pcs/Box	07945823088
KLC	225	225.	KLC225	0KLC225.X	1 Pcs/Box	07945823089
KLC	250	250.	KLC250	0KLC250.X	1 Pcs/Box	07945823090
KLC	300	300.	KLC300	0KLC300.X	1 Pcs/Box	07945823091
KLC	350	350.	KLC350	0KLC350.X	1 Pcs/Box	07945823092
KLC	400	400.	KLC400	0KLC400.X	1 Pcs/Box	07945823093
KLC	450	450.	KLC450	0KLC450.X	1 Pcs/Box	07945823095
KLC	500	500.	KLC500	0KLC500.X	1 Pcs/Box	07945823096
KLC	600	600.	KLC600	0KLC600.X	1 Pcs/Box	07945823098
KLC	700	700.	KLC700	0KLC700.X	1 Pcs/Box	07945823101
KLC	800	800.	KLC800	0KLC800.X	1 Pcs/Box	07945823103

*KLC series fuses are recommended for replacement use only.

Note: High-Speed fuses are designed for fixed installations. They are not intended for use in moving vehicle applications.

© 2023 Littelfuse, Inc.

L60S/KLC SERIES TRADITIONAL HIGH-SPEED FUSES

Dimensions

AMPERE RATING	FIG. NO.	DIMENSIONS INCHES (MM)							
		A	B	C	D	E	F	G	H
L60S SERIES, 600 V AC									
1 – 30	1	5 (127.0)	—	5/8 (15.9)	13/16 (20.6)	—	—	—	—
31 – 60	2	2 25/32 (70.6)	3 7/16 (87.3)	3 11/16 (93.7)	4 3/8 (111.1)	13/16 (20.6)	23/32 (18.3)	1 1/32 (8.7)	1/8 (3.2)
61 – 100	2	2 29/32 (73.8)	3 17/32 (89.7)	3 25/32 (96.0)	4 15/32 (113.5)	1 1/16 (27.0)	23/32 (18.3)	1 1/32 (8.7)	1/8 (3.2)
101 – 200	2	2 29/32 (73.8)	3 9/16 (90.5)	3 3/4 (95.3)	4 13/32 (111.9)	1 5/16 (33.3)	1 (25.4)	5/16 (7.9)	3/16 (4.8)
201 – 400	2	2 29/32 (73.8)	3 31/32 (100.8)	4 5/32 (105.6)	5 1/8 (130.2)	1 37/64 (40.1)	1 (25.4)	1 3/32 (10.3)	1/4 (6.4)
401 – 600	2	2 7/8 (73.0)	3 31/32 (100.8)	4 9/64 (105.2)	5 1/8 (130.2)	2 1/16 (52.8)	1 1/2 (38.1)	1 3/32 (10.3)	1/4 (6.4)
601 – 800	2	3 1/32 (77.0)	5 5/32 (133.4)	5 11/32 (135.7)	7 1/4 (184.2)	2 1/2 (63.5)	2 (50.8)	1 7/32 (13.5)	3/8 (9.5)
KLC SERIES, 600 V AC									
1 – 30	2	1 7/8 (47.6)	2 1/2 (63.5)	—	2 7/8 (73.0)	9/16 (14.3)	13/32 (10.3)	1/4 (6.4)	3/64 (1.2)
31 – 60	2	2 3/4 (69.9)	3 3/8 (85.7)	3 5/8 (92.1)	4 5/16 (109.5)	13/16 (20.6)	23/32 (18.3)	1 1/32 (8.7)	1/8 (3.2)
61 – 100	3	2 1/8 (73.0)	3 21/32 (92.9)	4 1/16 (103.2)	5 (127.0)	1 (25.4)	3/4 (19.1)	13/32 (10.3)	1/8 (3.2)
101 – 200	3	2 27/32 (72.2)	3 17/32 (89.7)	4 3/8 (111.1)	5 3/32 (129.4)	1 1/2 (38.1)	1 (25.4)	13/32 (10.3)	1/4 (6.4)
201 – 400	3	2 27/32 (72.2)	4 21/32 (118.3)	4 27/32 (123.0)	6 1/4 (158.8)	2 (50.8)	1 5/8 (41.3)	9/16 (14.3)	1/4 (6.4)
401 – 800	3	2 27/32 (72.2)	4 21/32 (118.3)	5 11/32 (135.7)	6 1/4 (158.8)	2 1/2 (63.5)	2 (50.8)	9/16 (14.3)	3/8 (9.5)

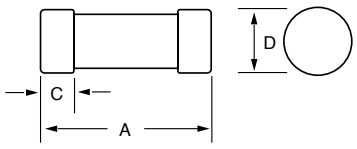

Fig. 1

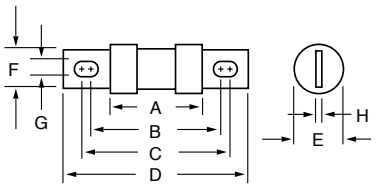

Fig, 2

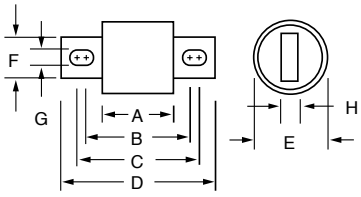

Fig. 3

Note: High-Speed fuses are designed for fixed installations. They are not intended for use in moving vehicle applications.

Disclaimer Notice – Littelfuse products are not designed for, and shall not be used for, any purpose (including, without limitation, automotive, military, aerospace, medical, life-saving, life-sustaining or nuclear facility applications, devices intended for surgical implant into the body, or any other application in which the failure or lack of desired operation of the product may result in personal injury, death, or property damage) other than those expressly set forth in applicable Littelfuse product documentation. Warranties granted by Littelfuse shall be deemed void for products used for any purpose not expressly set forth in applicable Littelfuse documentation. Littelfuse shall not be liable for any claims or damages arising out of products used in applications not expressly intended by Littelfuse as set forth in applicable Littelfuse documentation. The sale and use of Littelfuse products is subject to Littelfuse Terms and Conditions of Sale, unless otherwise agreed by Littelfuse.
Littelfuse.com/Product-Disclaimer

© 2023 Littelfuse, Inc.

THIS PAGE INTENTIONALLY LEFT BLANK

LF SERIES INDICATING FUSE BLOCKS











Smaller Footprint Provides Space Savings

DIN-Rail Mounting Eases Installation

Indication Improves Functionality

An Indication of Value

The Littelfuse LF Series Fuse Blocks and Covers offer generous space savings and a greater value over previous generations. View the different series classes for available indication, snap-to-release DIN rail mounting, universal mounting holes and touch-safe covers.

© 2023 Littelfuse, Inc.

LF SERIES CLASS J FUSE BLOCKS

600 V



Patent US8810420

Specifications

Voltage Ratings	600 V
Ampere Ratings	0–600 A
Leakage Current	<0.6 mA at 600 V
Materials:	
Base	Thermoplastic
Fuse Clip	Tin plated copper alloy
Box Lug	Aluminum
Pressure Plate	Zinc plated steel
Screw	Zinc plated steel
Flammability Rating	UL 94 V-0
Approvals	UL Listed (File: E14721) CSA Certified (File: LR7316)
Environmental	RoHS Compliant, Lead (Pb) Free REACH Compliant

Description

The Littelfuse 600 V Class J blocks offer generous space savings and enhanced value over previous generations, such as indication, snap-to-release DIN-rail mounting and universal mounting holes.

Features/Benefits

- Space-saving design—up to 45 % smaller
- Universal mounting holes for easy replacement
- Indication offered on all versions except 200–600 A
- One hand release from DIN rail for ferrule style fuses
- Reinforced fuse clips are standard on all Class J blocks
- Covers available for 100 A and lower to enhance safety
- Both hex and slot set screw options available on 30 A and 60 A box lugs

Recommended Fuses

Time Delay
Series: JTD_ID
Series: JTD

Fast Acting
Series: JLS

For information about touch-safe Class J fuse holders, visit:
Littelfuse.com/lfpsj

Web Resources

For sample requests, downloadable CAD drawings, fuse block cover datasheet and other technical information, visit:
Littelfuse.com/fuseblocks
Littelfuse.com/lfj

Ordering Information (Class J 600 V)

AMPERE RATING	POLES	ORDERING NUMBER: BASE PART NUMBER	TERMINAL SUFFIX: BOX LUG HEX	TERMINAL SUFFIX: BOX LUG SLOT	TERMINAL SUFFIX: PRESSURE PLATE	TERMINAL SUFFIX: SCREW	TORQUE	TERMINAL	WIRE RANGE	WIRE TYPE		BASE TEMP RATING	DIN RAIL	INDICATION	COVER ORDERING NUMBER*
30	1	LFJ600301	CID-HX	CID	PID	SID	2.8 N-m (25 in-lbs)	C	6–14 AWG	CU Only	Solid / Stranded	125 °C	•	•	LFJ60030FBC
	2	LFJ600302	CID-HX	CID	PID	SID		P	10–14 AWG						
	3	LFJ600303	CID-HX	CID	PID	SID		S	10–22 AWG						
60	1	LFJ600601	CID-HX	CID	—	—	5.6 N-m (50 in-lbs)	2–4 AWG		CU-AL		125 °C	•	•	LFJ60060FBC
	2	LFJ600602	CID-HX	CID	—	—									
	3	LFJ600603	CID-HX	CID	—	—	2.8 N-m (25 in-lbs)	6–14 AWG							
100	1	LFJ601001	CID	—	—	—	13.6 N-m (120 in-lbs)	2/0–6 AWG		CU-AL		130 °C	—	•	LFJ60100FBC**
	3	LFJ601003	CID	—	—	—	4.5 N-m (40 in-lbs)	8 AWG							
							4.0 N-m (35 in-lbs)	10–14 AWG							
200	1	LFJ602001	C	—	—	—	31.1 N-m (275 in-lbs)	250 kcmil-6		CU-AL		130 °C	—	—	—
	3	LFJ602003	C	—	—	—									
400	1	LFJ604001	C	—	—	—	31.1 N-m (275 in-lbs)	(2) 350 kcmil-1/0		CU-AL		130 °C	—	—	—
	3	LFJ604003	C	—	—	—									
600	1	LFJ606001	C	—	—	—	42.4 N-m (375 in-lbs)	(2) 500 kcmil-4		CU-AL		130 °C	—	—	—
	3	LFJ606003	C	—	—	—									

Note: Reinforcing springs standard on all Class J fuse blocks.
**Covers sold individually. One cover needed for each pole.*
***Cover is not compatible with 70–100 A JLS series fuses*

LF SERIES CLASS J FUSE BLOCKS

Dimensions mm (inches)

600 V 30 A

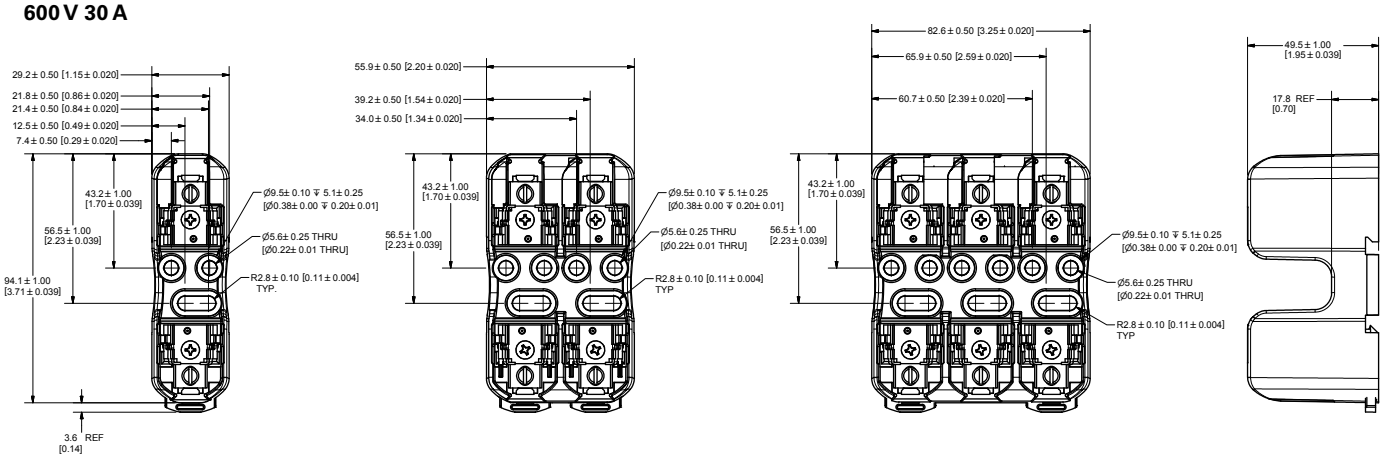

600 V 60 A

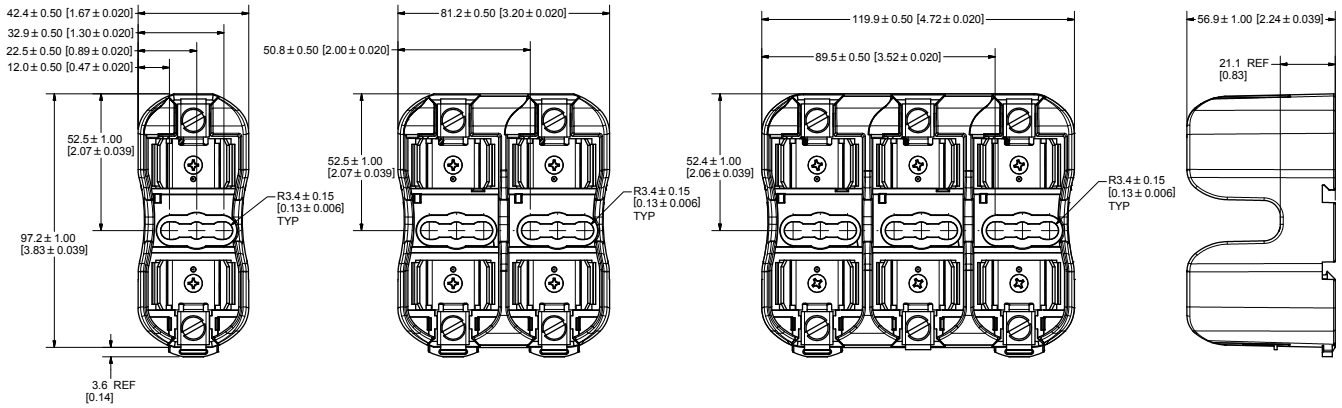

600 V 100 A

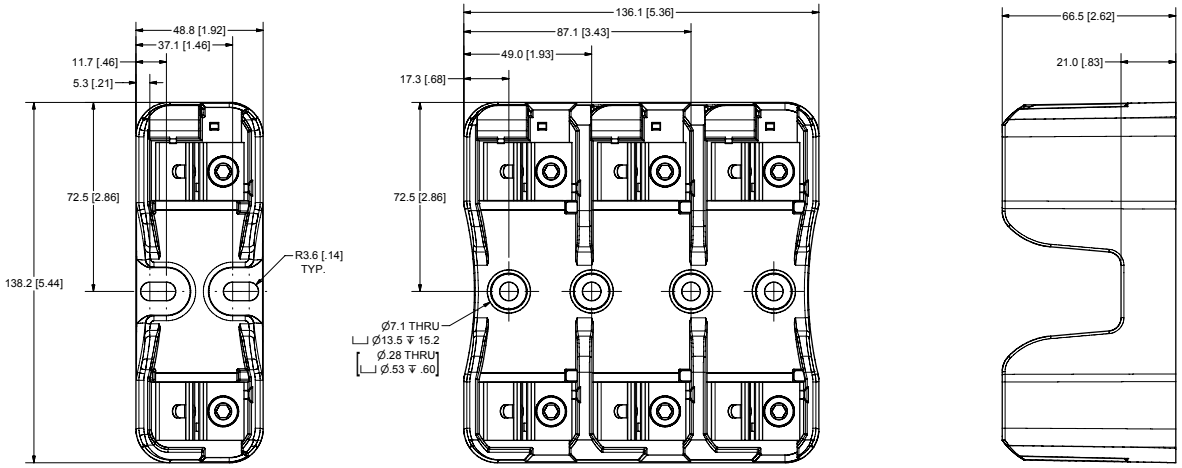

© 2023 Littelfuse, Inc.

LF SERIES CLASS J FUSE BLOCKS

Dimensions mm (inches)

600 V 200 A

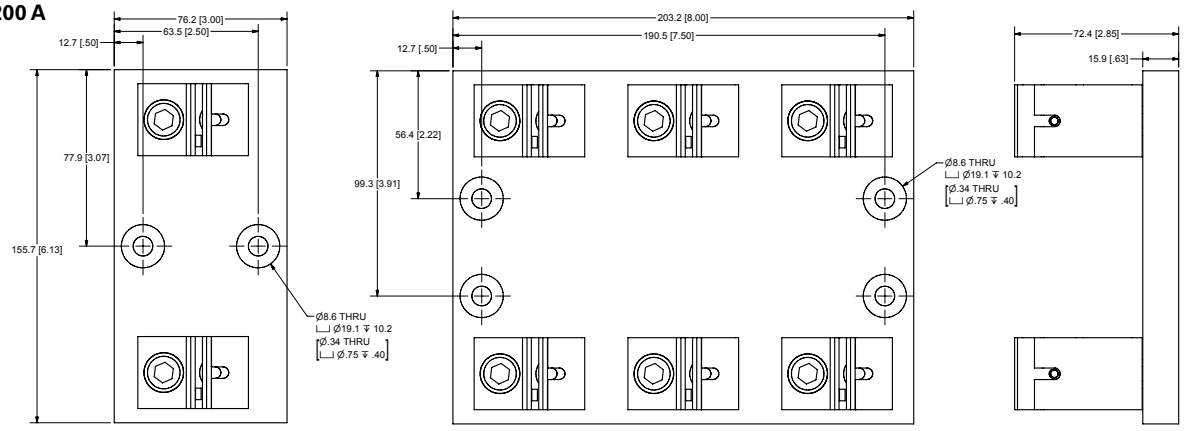

600 V 400 A

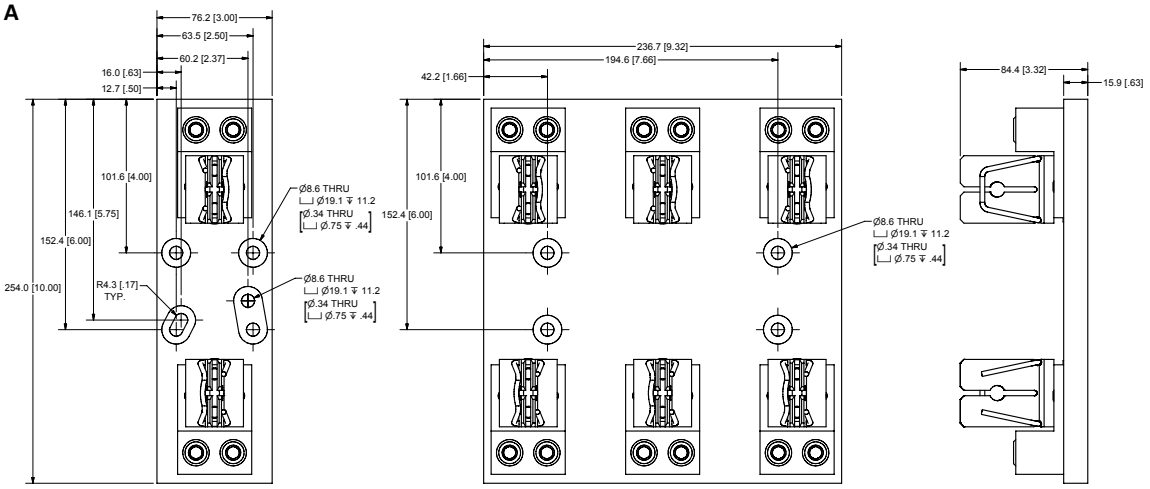

600 V 600 A

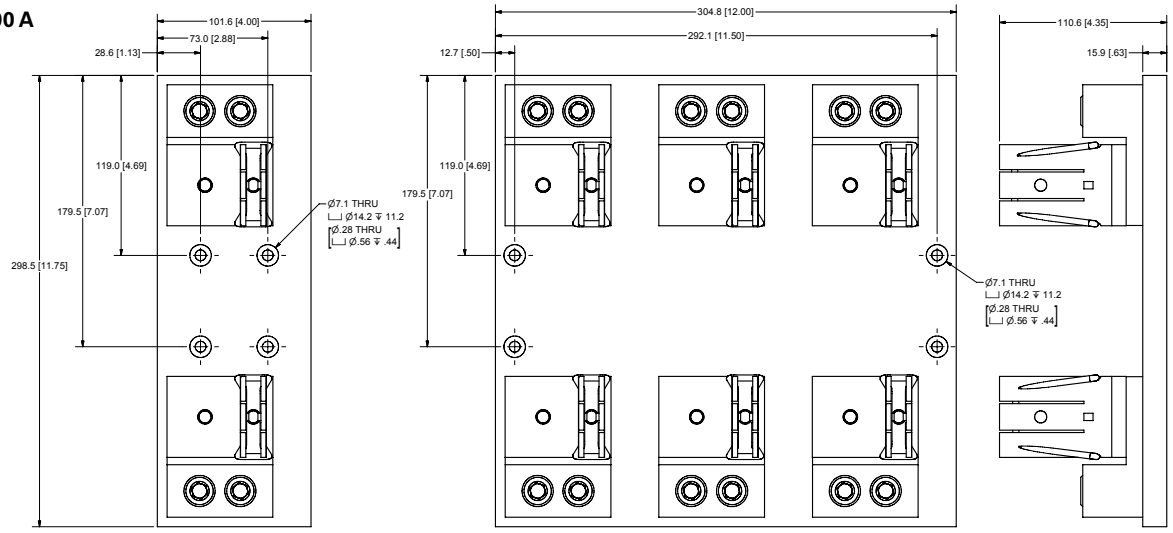

LF SERIES CLASS H/K5 AND R FUSE BLOCKS

250 V • 600 V



Description

The Littelfuse Class H/K5 and R blocks offer many benefits such as indication, snap-to-release DIN rail mounting and mounting flexibility for easier installation. Class H and Class R fuse blocks are dimensionally the same, but Class R blocks incorporate a rejection feature, which only allows Class R fuses to be inserted.

Features/Benefits

- Accommodates a wide range of existing mounting configurations
- Indication offered on most 250 V and 600 V versions
- One hand release from DIN rail for ferrule style fuses
- Reinforced fuse clips are standard on all Class H and Class R fuse blocks
- Covers available for 100 A and lower to enhance safety
- Both hex and slot set screw options available on 60 Ampere, 600 Volt Class R box lugs

Specifications

Voltage Rating	250 V, 600 V
Ampere Ratings	0–600 A
Leakage Current	<0.6 mA at 600 V
Withstand Rating	Class H: 10 kA RMS SYM Class R: 200 kA RMS SYM
Materials:	
Base	Thermoplastic
Fuse Clip	Tin plated copper alloy
Box Lug	Aluminum
Pressure Plate	Zinc plated steel
Screw	Zinc plated steel
Flammability Rating	UL94 V-0
Approvals	UL Listed (File: E14721) CSA Certified (File: LR7316)
Environmental	RoHS Compliant, Lead (Pb) Free

Recommended Fuses

Class H/K5 Blocks – 250 V
NLN

Class R Blocks – 250 V
FLNR/FLNR_ID, KLNR, LLNRK

Class H/K5 Blocks – 600 V
NLS

Class R Blocks – 600 V
FLSR/FLSR_ID, KLSR, LLSRK/LLSRK_ID, IDSR

Web Resources

Sample requests, downloadable CAD drawings and other technical information:
Littelfuse.com/lfh
Littelfuse.com/lfr

© 2023 Littelfuse, Inc.

LF SERIES CLASS H/K5 AND R FUSE BLOCKS

Ordering Information (Class H 250 V)

AMP RATING	ORDERING NUMBER					INDICATION	TORQUE	WIRE RANGE	WIRE TYPE		BASE TEMP RATING	DIN RAIL	COVER ORDERING NUMBER *
	POLES	BOX LUG HEX SCREW	BOX LUG SLOT SCREW	PRESSURE PLATE	SCREW								
30	1	—	LFH250301C	LFH250301P	LFH250301S	—	2.8 N-m (25 in-lbs)	BOX LUG 6–14 AWG PRESSURE PLATE 10–14 AWG SCREW 10–22 AWG	CU only	Solid / Stranded	125 °C	•	LFH25030FBC
	2	—	LFH250302C	LFH250302P	LFH250302S	—							
	3	—	LFH250303C	LFH250303P	LFH250303S	—							
60	1	—	LFH250601CID	—	—	•	5.6 N-m (50 in-lbs) 2.8 N-m (25 in-lbs)	2–4 AWG 6–14 AWG	CU-AL		125 °C	•	LFH25060FBC
		—	LFH250601C	—	—	—							
	2	—	LFH250602CID	—	—	•							
		—	LFH250602C	—	—	—							
	3	—	LFH250603CID	—	—	•							
		—	LFH250603C	—	—	—							
100	1	LFH251001CID	—	—	—	•	13.6 N-m (120 in-lbs) 4.5 N-m (40 in-lbs) 4.0 N-m (35 in-lbs)	2/0–6 AWG 8 AWG 10–14 AWG	CU-AL		130 °C	—	LFH25100FBC
		LFH251001C	—	—	—	—							
	3	LFH251003CID	—	—	—	•							
		LFH251003C	—	—	—	—							
200	1	LFH252001C	—	—	—	—	31.1 N-m (275 in-lbs)	250 kcmil-6	CU-AL		130 °C	—	—
	3	LFH252003C	—	—	—								
400	1	LFH254001C	—	—	—	—	31.1 N-m (275 in-lbs)	(2) 350 kcmil-1/0	CU-AL		130 °C	—	—
	3	LFH254003C	—	—	—								
600	1	LFH256001C	—	—	—	—	42.4 N-m (375 in-lbs)	(2) 500 kcmil-4	CU-AL		130 °C	—	—
	3	LFH256003C	—	—	—								

Note: Reinforcing springs standard on all Class H fuse blocks.
**Covers sold individually. One cover needed for each pole.*

Ordering Information (Class H 600 V)

AMP RATING	ORDERING NUMBER					INDICATION	TORQUE	WIRE RANGE	WIRE TYPE		BASE TEMP RATING	DIN RAIL	COVER ORDERING NUMBER *
	POLES	BOX LUG HEX SCREW	BOX LUG SLOT SCREW	PRESSURE PLATE	SCREW								
30	1	—	LFH600301CID	LFH600301PID	LFH600301SID	•	2.8 N-m (25 in-lbs)	BOX LUG 6–14 AWG PRESSURE PLATE 10–14 AWG SCREW 10–22 AWG	CU only	Solid / Stranded	130 °C	•	LFH60030FBC
		—	LFH600301C	LFH600301P	LFH600301S	—							
	2	—	LFH600302CID	LFH600302PID	LFH600302SID	•							
		—	LFH600302C	LFH600302P	LFH600302S	—							
	3	—	LFH600303CID	LFH600303PID	LFH600303SID	•							
		—	LFH600303C	LFH600303P	LFH600303S	—							
60	1	—	LFH600601CID	—	—	—	5.6 N-m (50 in-lbs) 2.8 N-m (25 in-lbs)	2–4 AWG 6–14 AWG	CU-AL		130 °C	•	LFH60060FBC
		—	LFH600601C	—	—	•							
	2	—	LFH600602CID	—	—	—							
		—	LFH600602C	—	—	•							
	3	—	LFH600603CID	—	—	—							
		—	LFH600603C	—	—	•							
100	1	LFH601001CID	—	—	—	—	13.6 N-m (120 in-lbs) 4.5 N-m (40 in-lbs) 4.0 N-m (35 in-lbs)	2/0–6 AWG 8 AWG 10–14 AWG	CU-AL		130 °C	—	LFH60100FBC
		LFH601001C	—	—	—	•							
	3	LFH601003CID	—	—	—	—							
		LFH601003C	—	—	—	•							
200	1	LFH602001C	—	—	—	—	31.1 N-m (275 in-lbs)	250 kcmil-6	CU-AL		130 °C	—	—
	3	LFH602003C	—	—	—								
400	1	LFH604001C	—	—	—	—	31.1 N-m (275 in-lbs)	(2) 350 kcmil-1/0	CU-AL		130 °C	—	—
	3	LFH604003C	—	—	—								
600	1	LFH606001C	—	—	—	—	42.4 N-m (375 in-lbs)	(2) 500 kcmil-4	CU-AL		130 °C	—	—
	3	LFH606003C	—	—	—								

Note: Reinforcing springs standard on all Class H fuse blocks.
**Covers sold individually. One cover needed for each pole.*

© 2023 Littelfuse, Inc.

LF SERIES CLASS H/K5 AND R FUSE BLOCKS

Ordering Information (Class R 250 V)

AMP RATING	ORDERING NUMBER					INDICATION	TORQUE	WIRE RANGE	WIRE TYPE		BASE TEMP RATING	DIN RAIL	COVER ORDERING NUMBER *
	POLES	BOX LUG HEX SCREW	BOX LUG SLOT SCREW	PRESSURE PLATE	SCREW								
30	1	—	LFR250301C	LFR250301P	LFR250301S	—	2.8 N-m (25 in-lbs)	BOX LUG 6–14 AWG PRESSURE PLATE 10–14 AWG SCREW 10–22 AWG	CU only	Solid / Stranded	125 °C	•	LFH25030FBC
	2	—	LFR250302C	LFR250302P	LFR250302S	—							
	3	—	LFR250303C	LFR250303P	LFR250303S	—							
60	1	—	LFR250601CID	—	—	•	5.6 N-m (50 in-lbs) 2.8 N-m (25 in-lbs)	2–4 AWG 6–14 AWG	CU-AL		125 °C	•	LFH25060FBC
		—	LFR250601C	—	—	—							
	2	—	LFR250602CID	—	—	•							
		—	LFR250602C	—	—	—							
	3	—	LFR250603CID	—	—	•							
		—	LFR250603C	—	—	—							
100	1	LFR251003CID	—	—	—	•	13.6 N-m (120 in-lbs) 4.5 N-m (40 in-lbs) 4.0 N-m (35 in-lbs	2/0–6 AWG 8 AWG 10–14 AWG	CU-AL		130 °C	—	LFH25100FBC
		LFR251003C	—	—	—	—							
	3	LFR251001CID	—	—	—	•							
		LFR251001C	—	—	—	—							
200	1	LFR252001C	—	—	—	—	31.1 N-m (275 in-lbs)	250 kcmil-6	CU-AL		130 °C	—	—
	3	LFR252003C	—	—	—								
400	1	LFR254001C	—	—	—	—	31.1 N-m (275 in-lbs)	(2) 350 kcmil-1/0	CU-AL		130 °C	—	—
	3	LFR254003C	—	—	—								
600	1	LFR256001C	—	—	—	—	42.4 N-m (375 in-lbs)	(2) 500 kcmil-4	CU-AL		130 °C	—	—
	3	LFR256003C	—	—	—								

Note: Reinforcing springs standard on all Class H fuse blocks.
**Covers sold individually. One cover needed for each pole.*

Ordering Information (Class R 600 V)

AMP RATING	ORDERING NUMBER					INDICATION	TORQUE	WIRE RANGE	WIRE TYPE		BASE TEMP RATING	DIN RAIL	COVER ORDERING NUMBER *
	POLES	BOX LUG HEX SCREW	BOX LUG SLOT SCREW	PRESSURE PLATE	SCREW								
30	1	—	LFR600301CID	LFR600301PID	LFR600301SID	•	2.8 N-m (25 in-lbs)	BOX LUG 6–14 AWG PRESSURE PLATE 10–14 AWG SCREW 10–22 AWG	CU only	Solid / Stranded	130 °C	•	LFH60030FBC
		—	LFR600301C	LFR600301P	LFR600301S	—							
	2	—	LFR600302CID	LFR600302PID	LFR600302SID	•							
		—	LFR600302C	LFR600302P	LFR600302S	—							
	3	—	LFR600303CID	LFR600303PID	LFR600303SID	•							
		—	LFR600303C	LFR600303P	LFR600303S	—							
60	1	LFR600601CID-HX	LFR600601CID	—	—	•	5.6 N-m (50 in-lbs) 2.8 N-m (25 in-lbs)	2–4 AWG 6–14 AWG	CU-AL		130 °C	•	LFH60060FBC
		-	LFR600601C	—	—	—							
	2	LFR600602CID-HX	LFR600602CID	—	—	•							
		-	LFR600602C	—	—	—							
	3	LFR600603CID-HX	LFR600603CID	—	—	•							
		-	LFR600603C	—	—	—							
100	1	LFR601001CID	—	—	—	•	13.6 N-m (120 in-lbs) 4.5 N-m (40 in-lbs) 4.0 N-m (35 in-lbs)	2/0–6 AWG 8 AWG 10–14 AWG	CU-AL		130 °C	—	LFH60100FBC
		LFR601001C	—	—	—	—							
	3	LFR601003CID	—	—	—	•							
		LFR601003C	—	—	—	—							
200	1	LFR602001C	—	—	—	—	31.1 N-m (275 in-lbs)	250 kcmil-6	CU-AL		130 °C	—	—
	3	LFR602003C	—	—	—								
400	1	LFR604001C	—	—	—	—	31.1 N-m (275 in-lbs)	(2) 350 kcmil-1/0	CU-AL		130 °C	—	—
	3	LFR604003C	—	—	—								
600	1	LFR606001C	—	—	—	—	42.4 N-m (375 in-lbs)	(2) 500 kcmil-4	CU-AL		130 °C	—	—
	3	LFR606003C	—	—	—								

Note: Reinforcing springs standard on all Class H fuse blocks.
**Covers sold individually. One cover needed for each pole.*

© 2023 Littelfuse, Inc.

LF SERIES CLASS H/K5 AND R FUSE BLOCKS

Dimensions mm (inches)

250 V 30 A

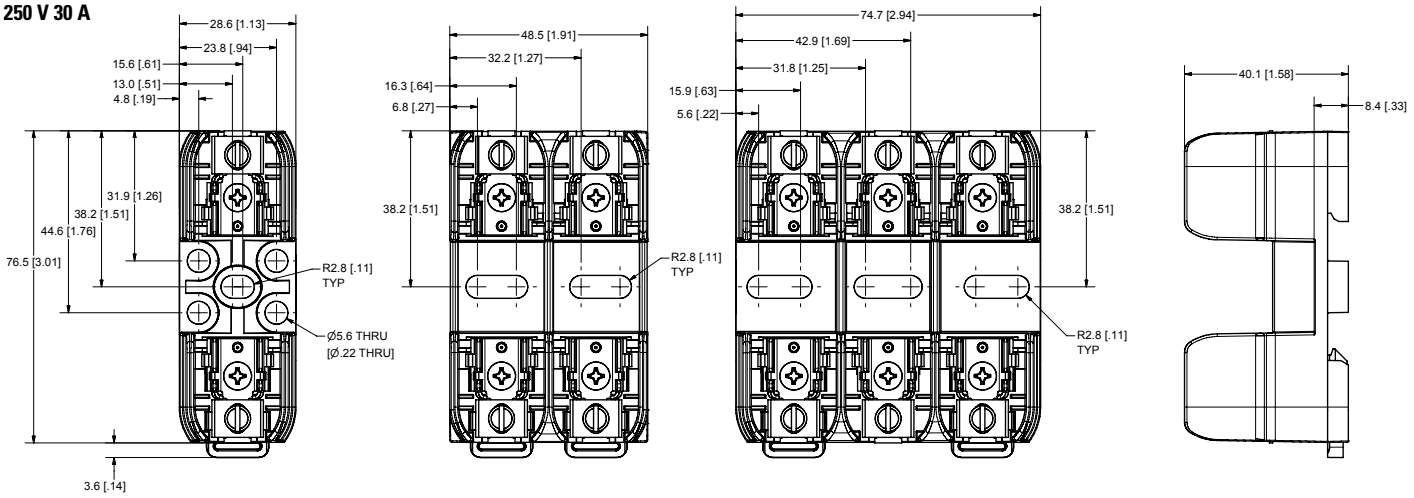

250 V 60 A

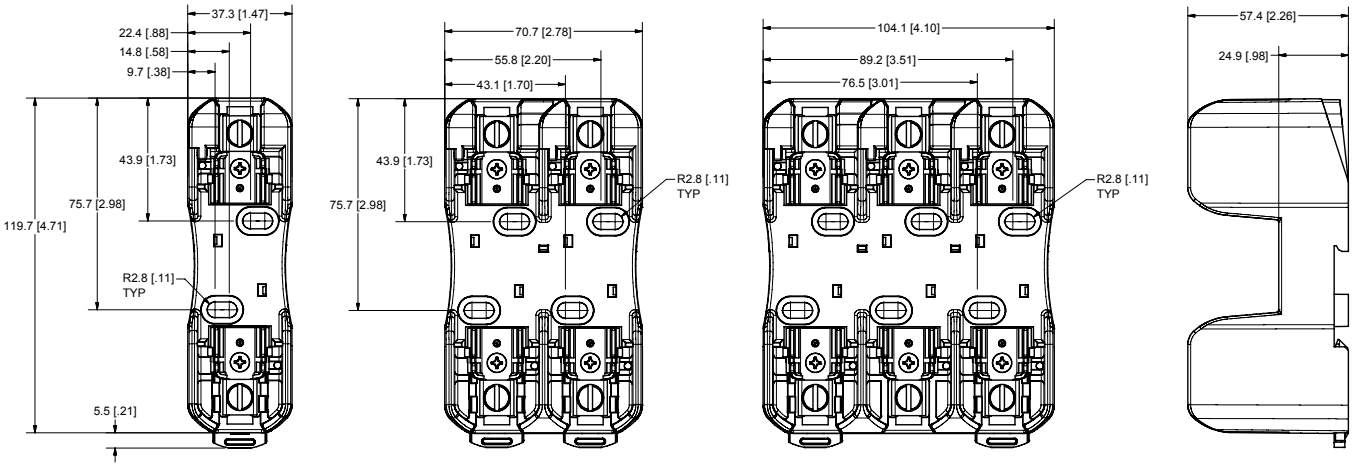

250 V 100 A

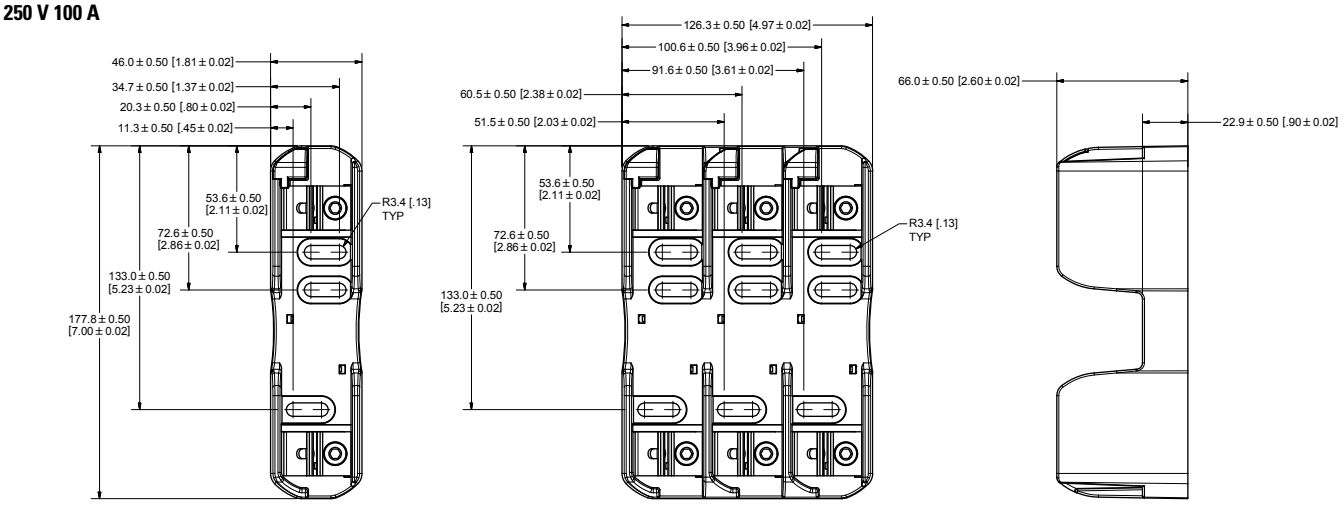

© 2023 Littelfuse, Inc.

LF SERIES CLASS H/K5 AND R FUSE BLOCKS

Dimensions mm (inches)

250 V 200 A

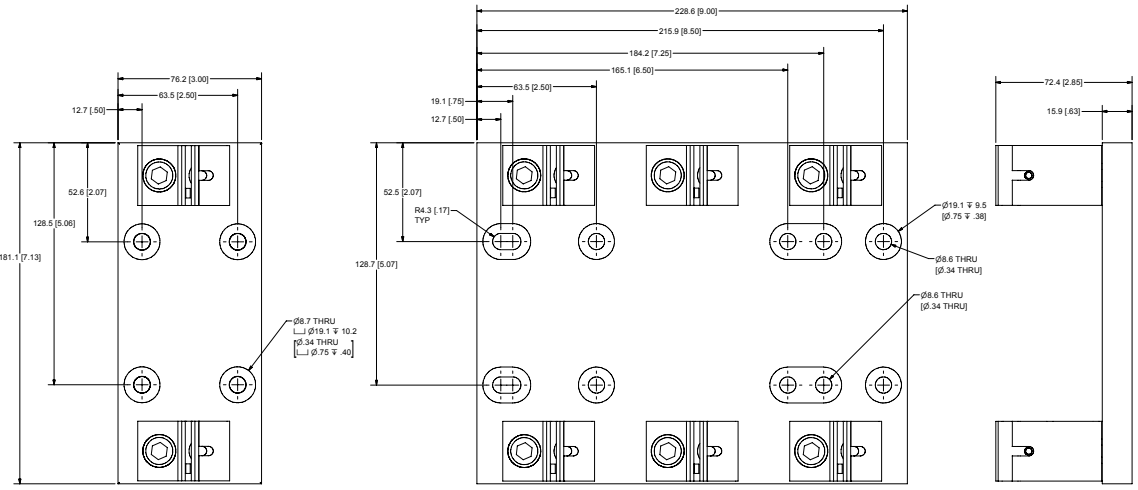

250 V 400 A

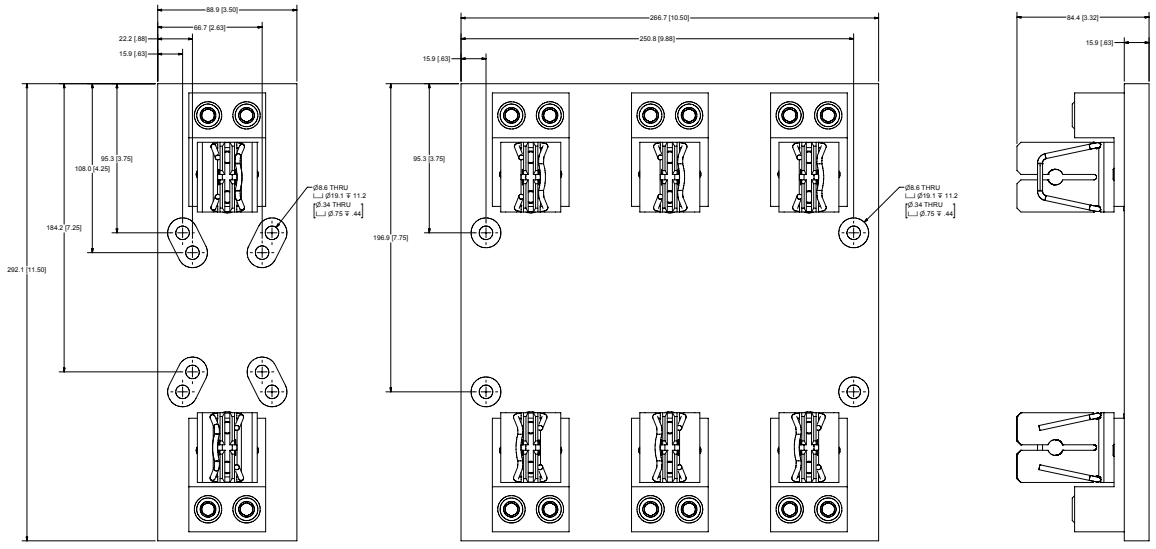

250 V 600 A

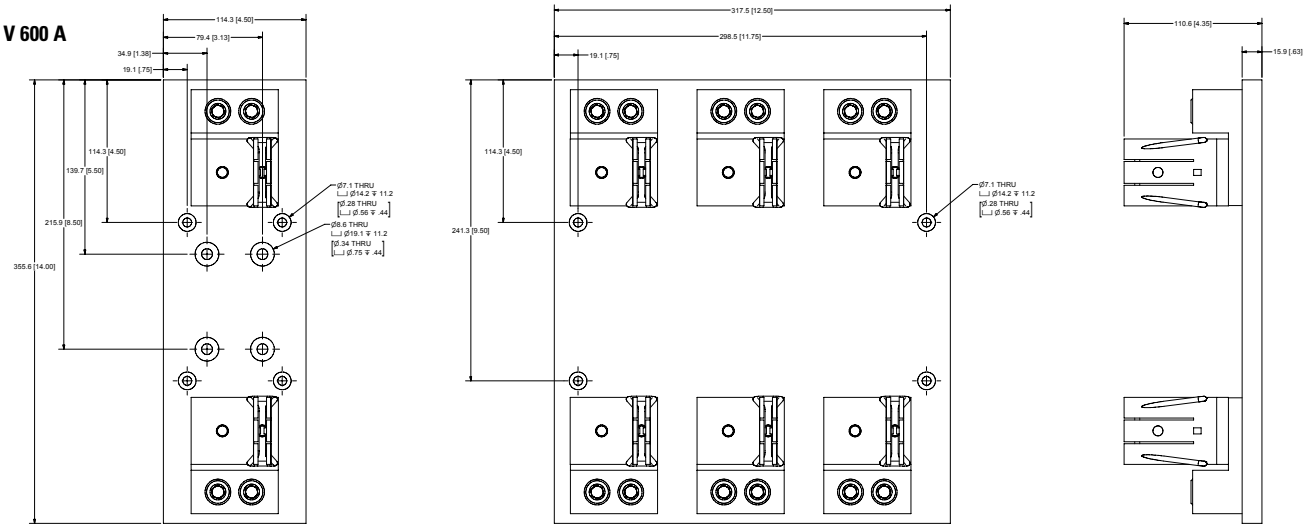

© 2023 Littelfuse, Inc.

LF SERIES CLASS H/K5 AND R FUSE BLOCKS

Dimensions mm (inches)

600 V 30 A

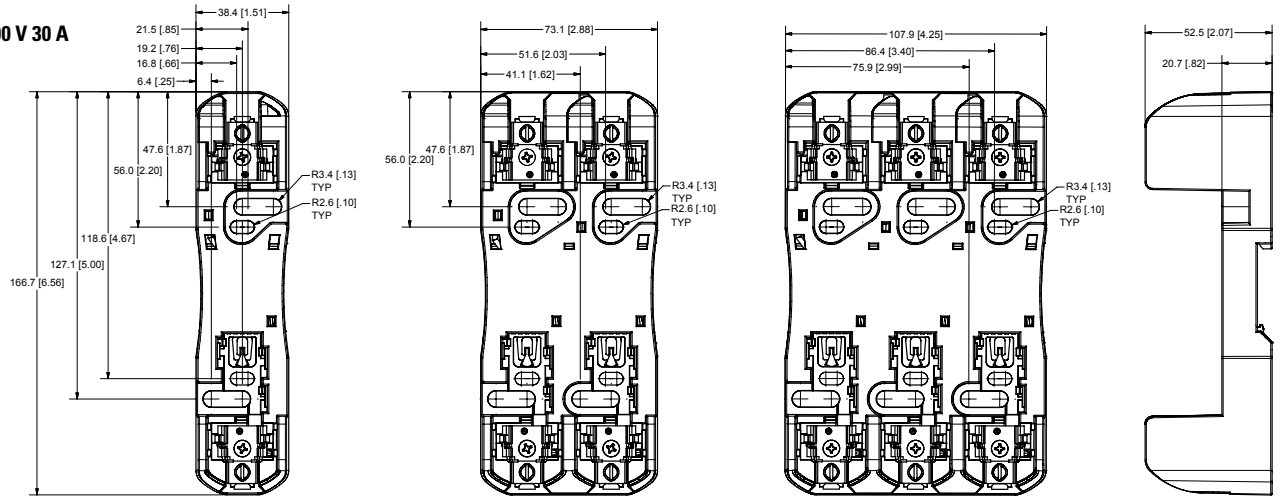

600 V 60 A

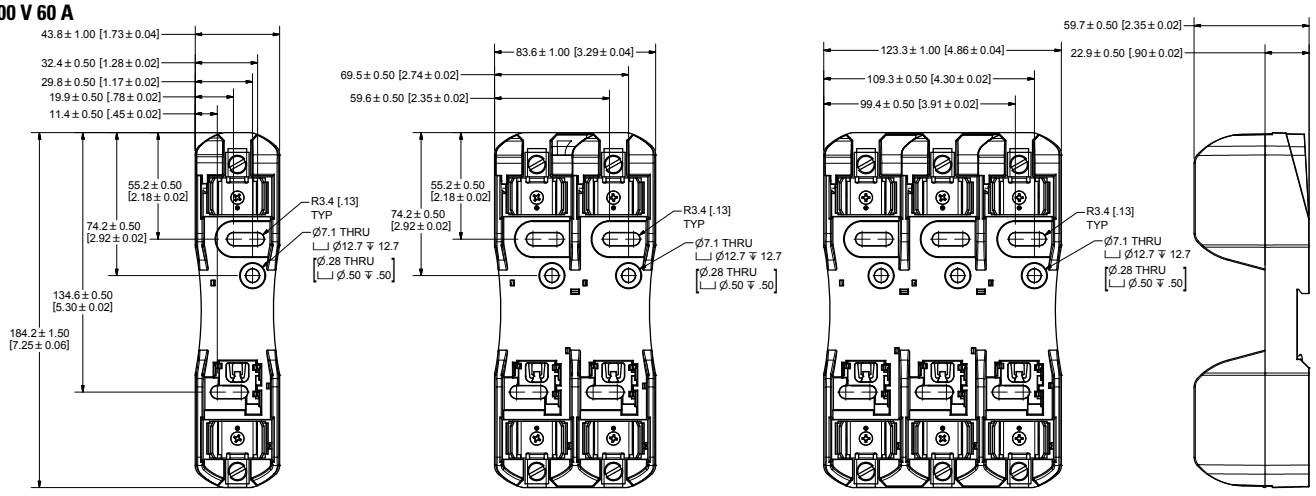

600 V 100 A

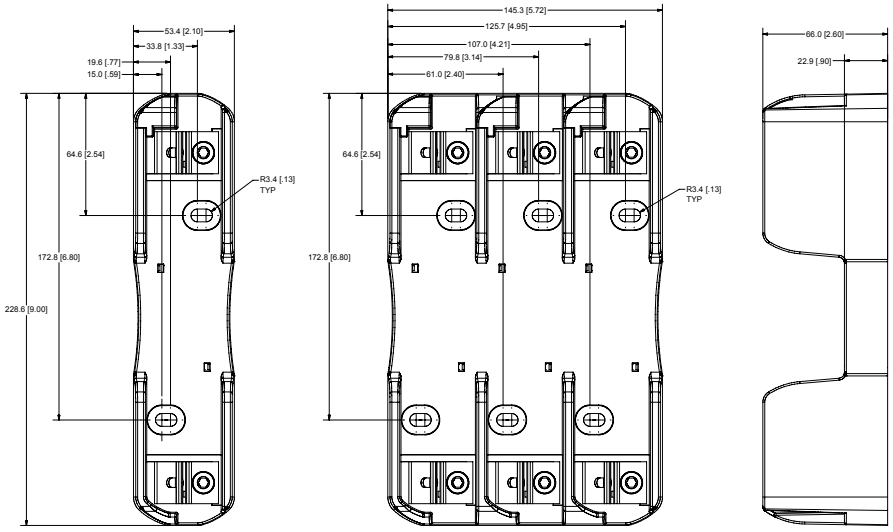

LF SERIES CLASS H/K5 AND R FUSE BLOCKS

Dimensions mm (inches)

600 V 200 A

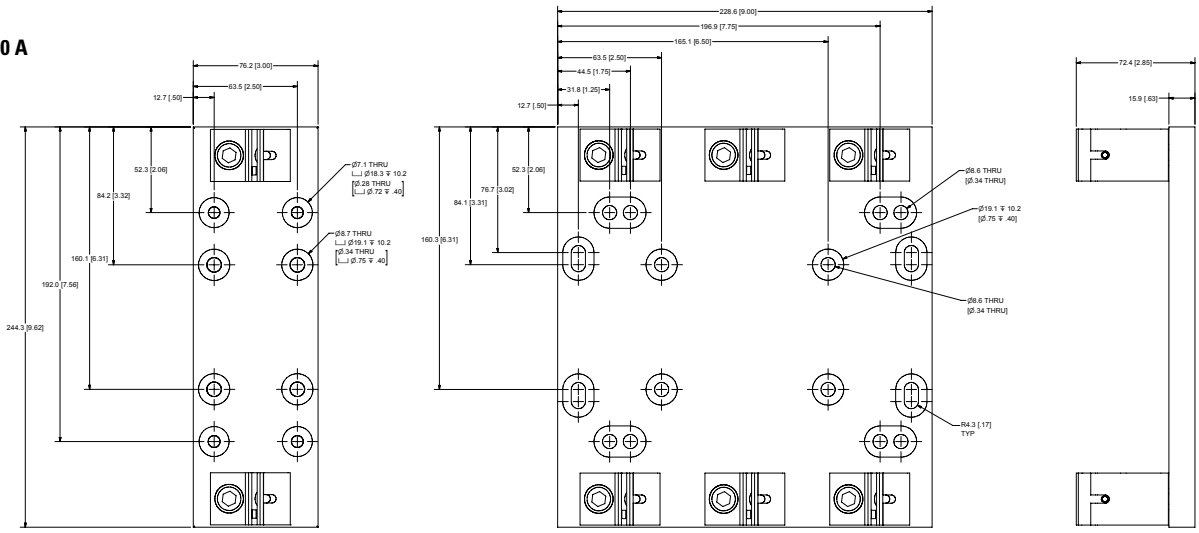

600 V 400 A

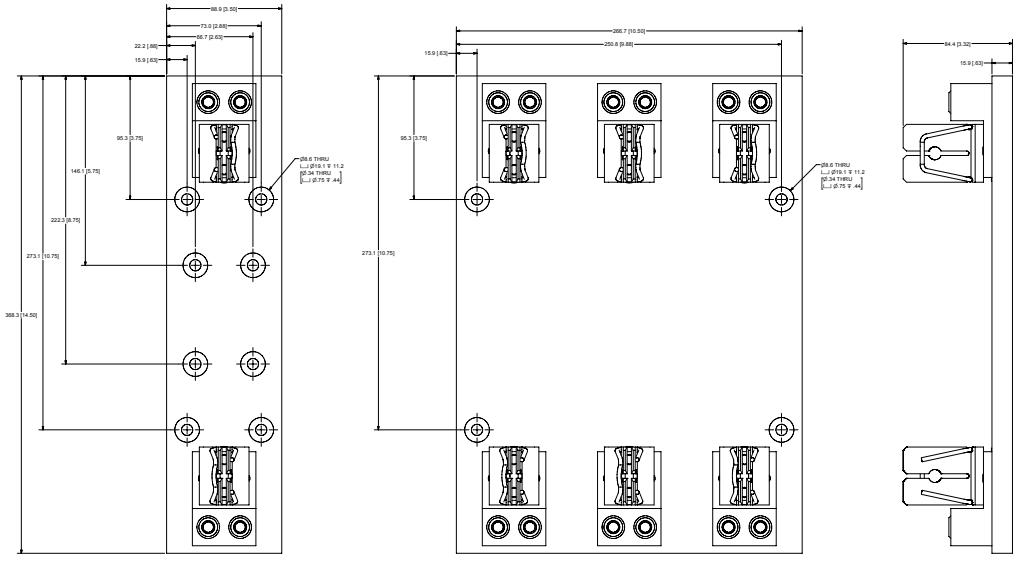

600 V 600 A

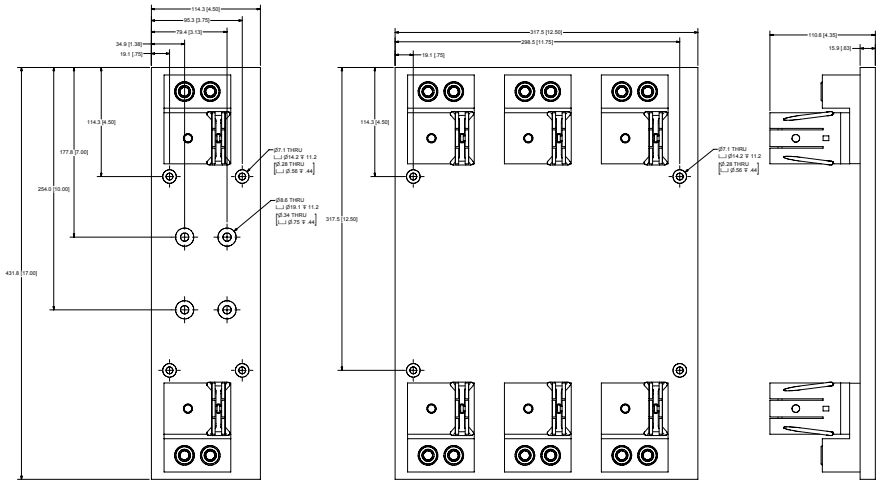

© 2023 Littelfuse, Inc.

LF SERIES CLASS T FUSE BLOCKS

300 V • 600 V



Description

The Littelfuse Class T fuse blocks offer many advantages such as space saving design, mounting flexibility for easier installation, snap-to-release DIN rail mounts and available covers.

Features/Benefits

- Space-saving design
- Accommodates a wide range of existing mounting configurations
- One hand release from DIN rail for 30–60 A fuses
- Reinforced fuse clips are standard
- Covers available for most amperages to enhance safety
- Both hex and slot set screw options available on 60 A box lugs

Specifications

Voltage Ratings	300 V/600 V
Ampere Ratings	0–600 A
Leakage Current	<0.6 mA at 600 V
Withstand Rating	200 kA RMS SYM
Materials:	
Base	Thermoplastic
Fuse Clip	Tin plated copper alloy
Box Lug	Aluminum
Fuse Studs	Zinc plated steel
Pressure Plate	Zinc plated steel
Screw	Zinc plated steel
Flammability Rating	UL 94 V-0
Approvals	UL Listed (File: E14721) CSA Certified (File: LR7316)
Environmental	RoHS Compliant, Lead (Pb) Free

Recommended Fuses

300 V JLLN
600 V JLLS

Web Resources

Sample requests, downloadable CAD drawings and other technical information:
Littelfuse.com/lft
Littelfuse.com/fuseblocks

Ordering Information (Class T 300 V)

AMPERE RATING	POLE	ORDERING NUMBER					TORQUE	WIRE RANGE	WIRE TYPE		BASE TEMP RATING	DIN RAIL MOUNT	COVER ORDERING NUMBER*
		BASE ORDERING NUMBER	TERMINAL SUFFIX										
			BOX LUG HEX	BOX LUG SLOT	PRESSURE PLATE	SCREW							
30	1	LFT300301	—	C	—	—	5.6 N-m (50 in-lbs)	2–4 AWG	CU-AL	Solid/Stranded	125 °C	•	LFT30030FBC
	2	LFT300302					2.8 N-m (25 in-lbs)	6–14 AWG					
	3	LFT300303											
60	1	LFT300601	C-HX	C	—	—	5.6 N-m (50 in-lbs)	2–4 AWG			125 °C	•	LFT30060FBC
	2	LFT300602					2.8 N-m (25 in-lbs)	6–14 AWG					
	3	LFT300603											
100	1	LFT301001	CS	—	—	—	13.6 N-m (120 in-lbs)	2/0–6 AWG			130 °C	—	LFT30100FBC
							4.5 N-m (40 in-lbs)	8 AWG					
	3	LFT301003					4.0 N-m (35 in-lbs)	10–14 AWG					
200	1	LFT302001	CS	—	—	—	31.1 N-m (275 in-lbs)	250 kcmil-6			130 °C	—	—
	3	LFT302003											
400	1	LFT304001	CS	—	—	—	(2) 31.1 N-m (275 in-lbs)	250 kcmil-6			130 °C	—	—
	3	LFT304003											
600	1	LFT306001	CS	—	—	—	(2) 42.4 N-m (375 in-lbs)	500 kcmil-6			130 °C	—	—
	3	LFT306003											

© 2023 Littelfuse, Inc.

LF SERIES CLASS T FUSE BLOCKS

Ordering Information (Class T 600 V)

AMPERE RATING	POLES	ORDERING NUMBER					TORQUE	WIRE RANGE	WIRE TYPE		BASE TEMP RATING	DIN RAIL MOUNT	COVER ORDERING NUMBER*
		BASE ORDERING NUMBER	TERMINAL SUFFIX										
			BOX LUG HEX	BOX LUG SLOT	PRESSURE PLATE	SCREW							
30	1	LFT600301	—	C	P	S	5.6 N-m (50 in-lbs)	2–4 AWG	† see note	Solid/Stranded	125 °C	•	LFT60030FBC
	2	LFT600302					2.8 N-m (25 in-lbs)	6–14 AWG					
	3	LFT600303											
60	1	LFT600601	C-HX	C	—	—	5.6 N-m (50 in-lbs)	2–4 AWG	CU-AL		125 °C	•	LFT60060FBC
	2	LFT600602					2.8 N-m (25 in-lbs)	6–14 AWG					
	3	LFT600603											
100	1	LFT601001	CS	—	—	—	13.6 N-m (120 in-lbs)	2/0–6 AWG			130 °C	—	LT60100FBC
	3	LFT601003					4.5 N-m (40 in-lbs)	8 AWG					
							4.0 N-m (35 in-lbs)	10–14 AWG					
200	1	LFT602001	CS	—	—	—	31.1 N-m (275 in-lbs)	250 kcmil-6			130 °C	—	LT60200FBC
	3	LFT602003											
400	1	LFT604001	CS	—	—	—	(2) 31.1 N-m (275 in-lbs)	250 kcmil-6			130 °C	—	LT60400FBC
	3	LFT604003											
600	1	LFT606001	CS	—	—	—	(2) 42.4 N-m (375 in-lbs)	500 kcmil-6			130 °C	—	LT60600FBC
	3	LFT606003											

** Covers sold individually. One cover needed for each pole.*
† Wire type for pressure plate and screw terminal is CU only

 © 2023 Littelfuse, Inc.

LF SERIES CLASS T FUSE BLOCKS

Dimensions mm (inches)

300 V 30 A

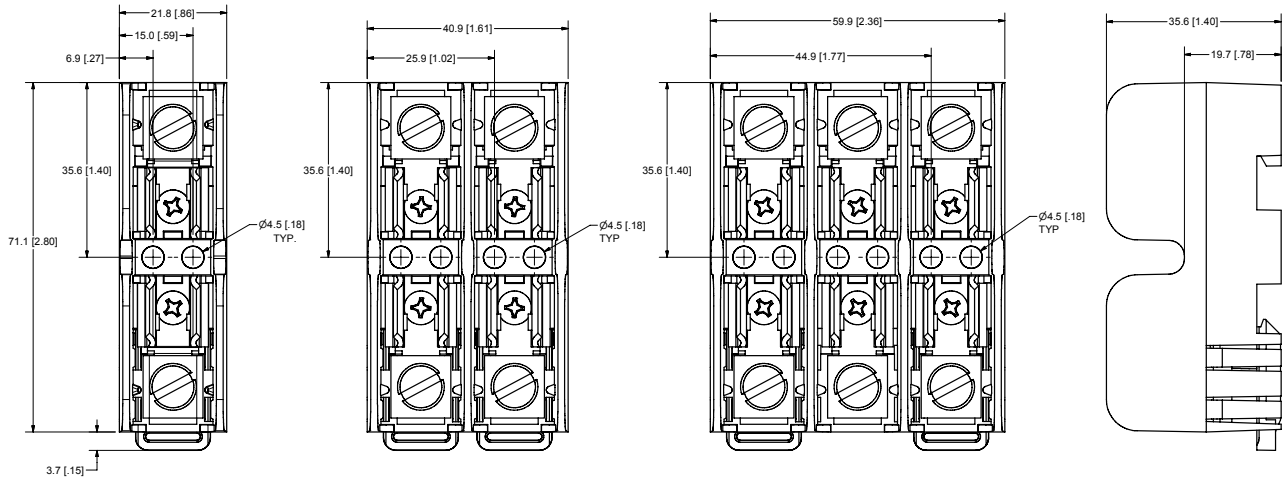

300 V 60 A

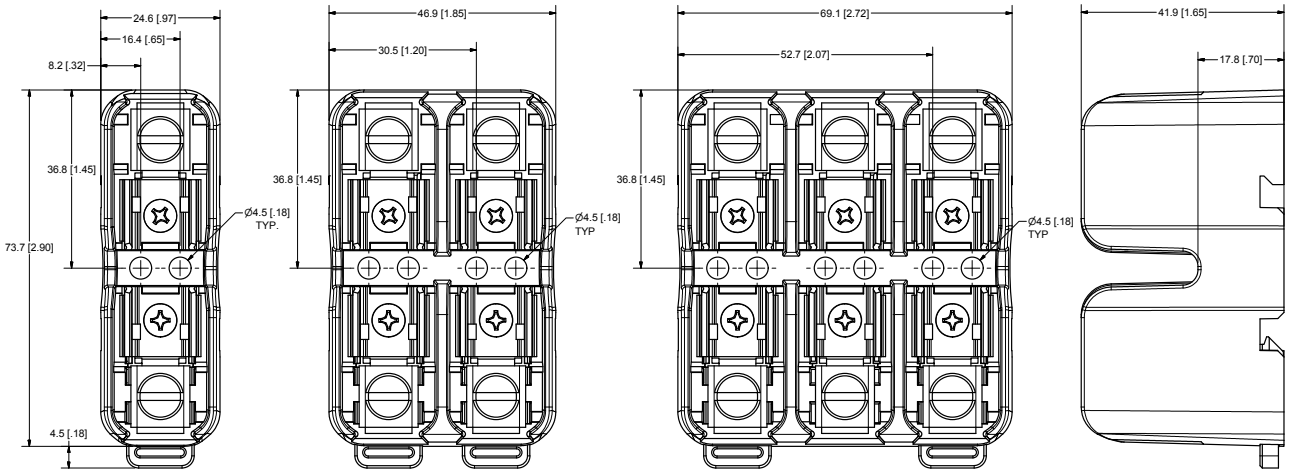

300 V 100 A

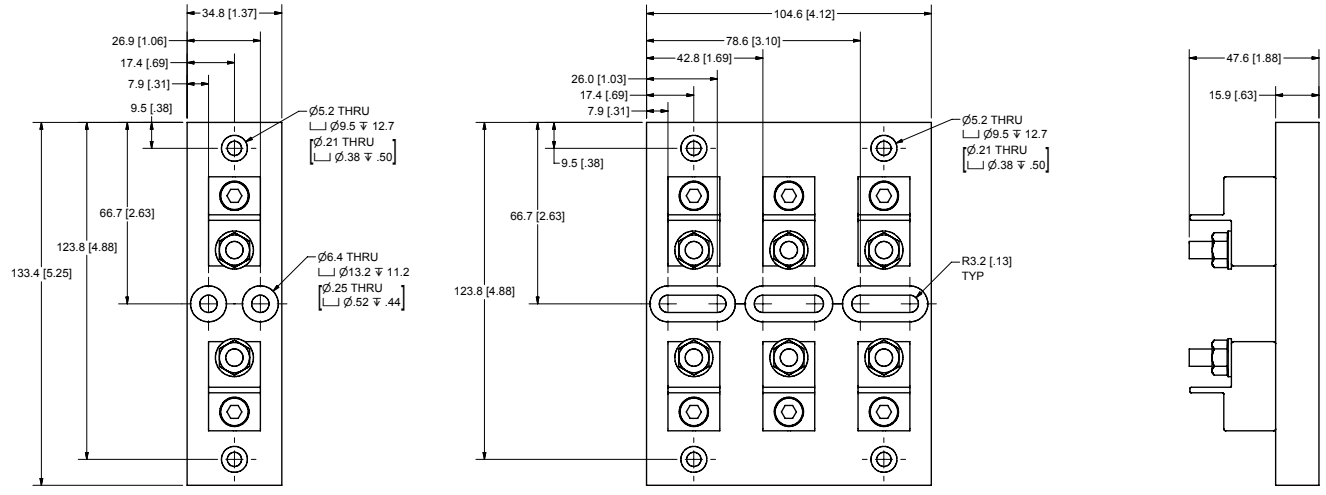

LF SERIES CLASS T FUSE BLOCKS

Dimensions mm (inches)

300 V 200 A

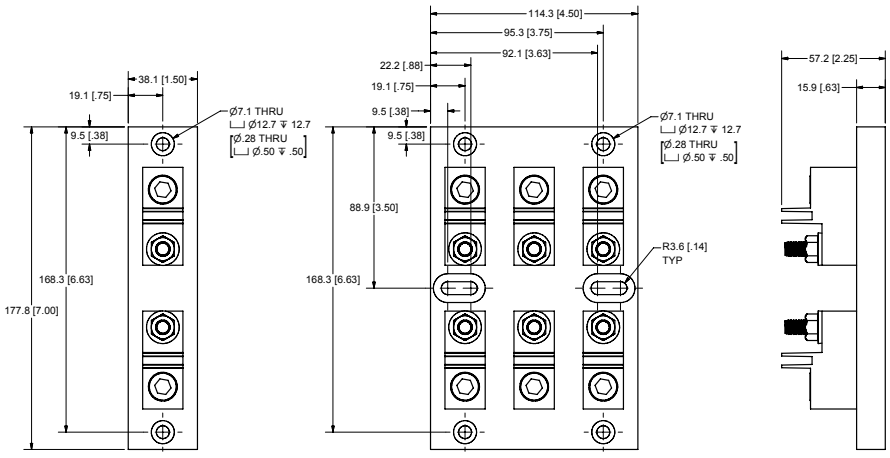

300 V 400 A

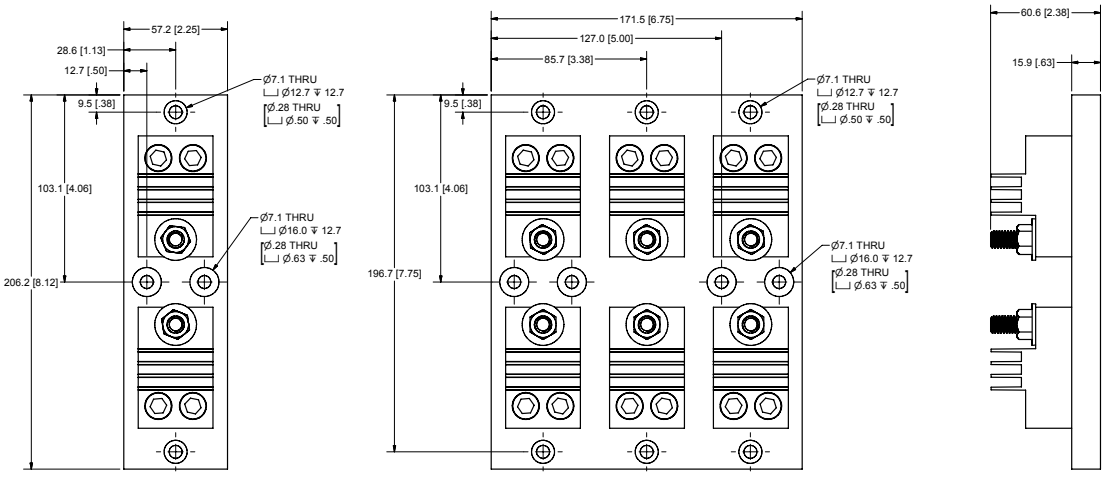

300 V 600 A

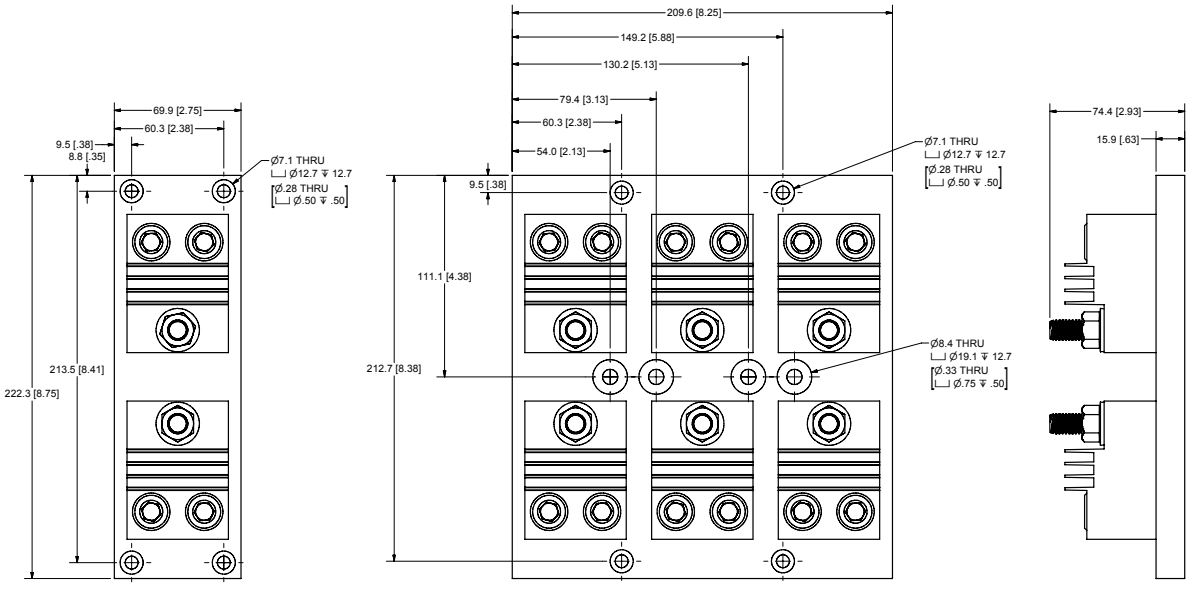

© 2023 Littelfuse, Inc.

LF SERIES CLASS T FUSE BLOCKS

Dimensions mm (inches)

600 V 30 A

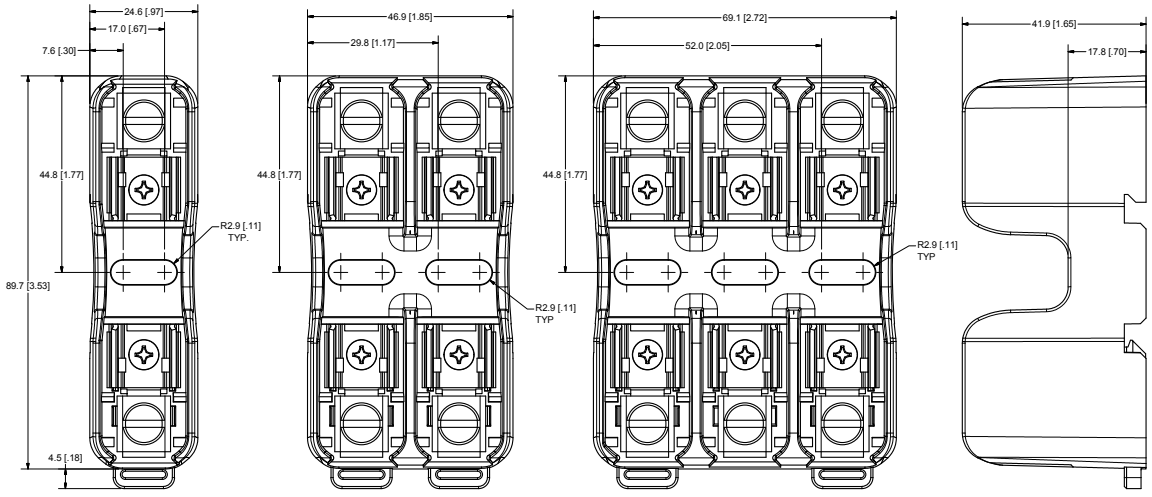

600 V 60 A

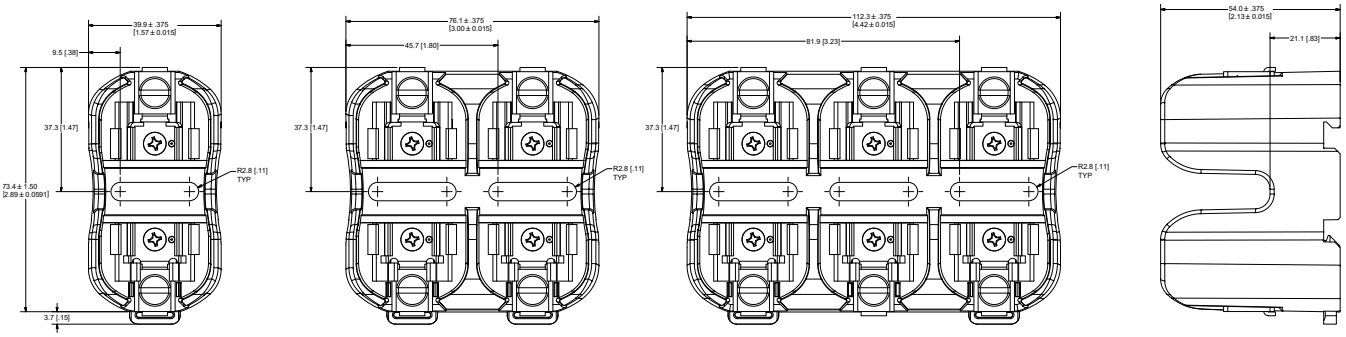

600 V 100 A

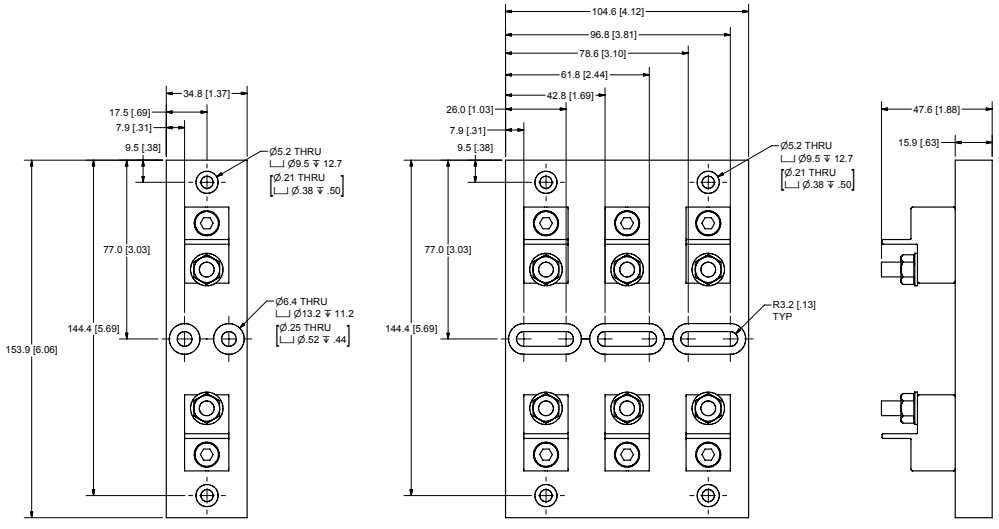

LF SERIES CLASS T FUSE BLOCKS

Dimensions mm (inches)

600 V 200 A

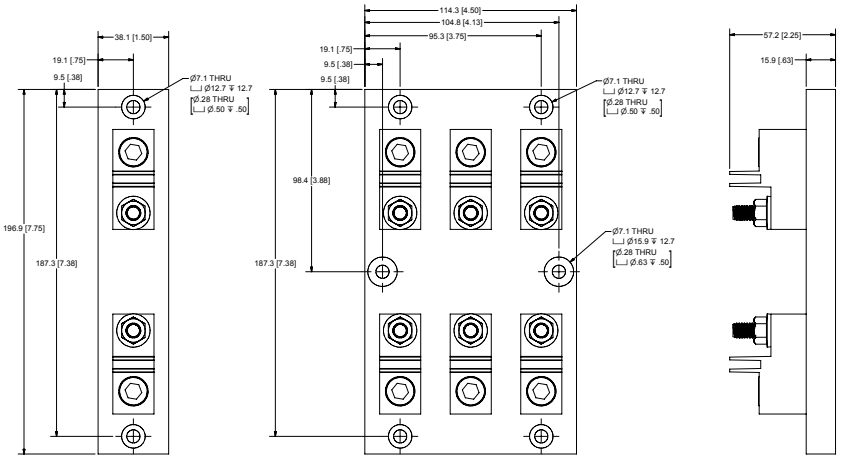

600 V 400 A

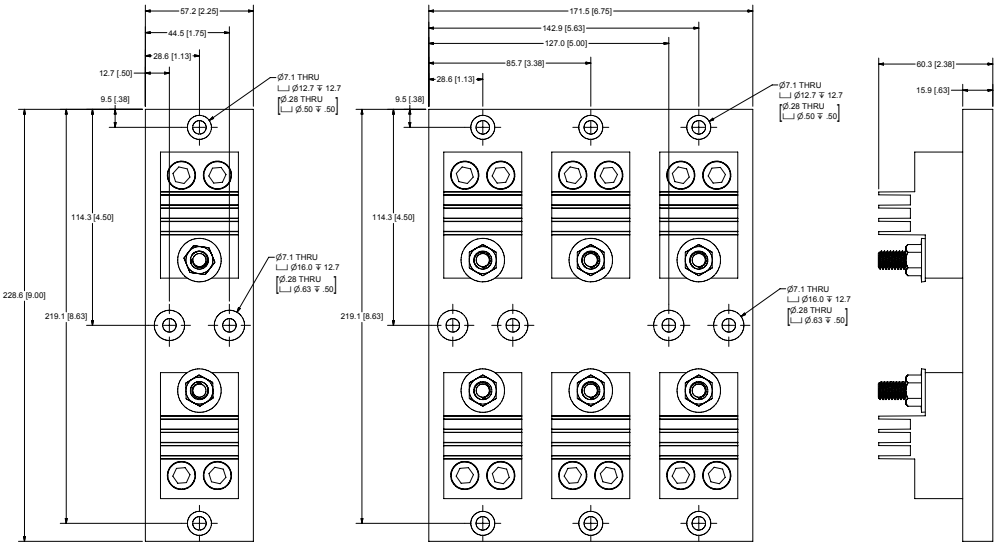

600 V 600 A

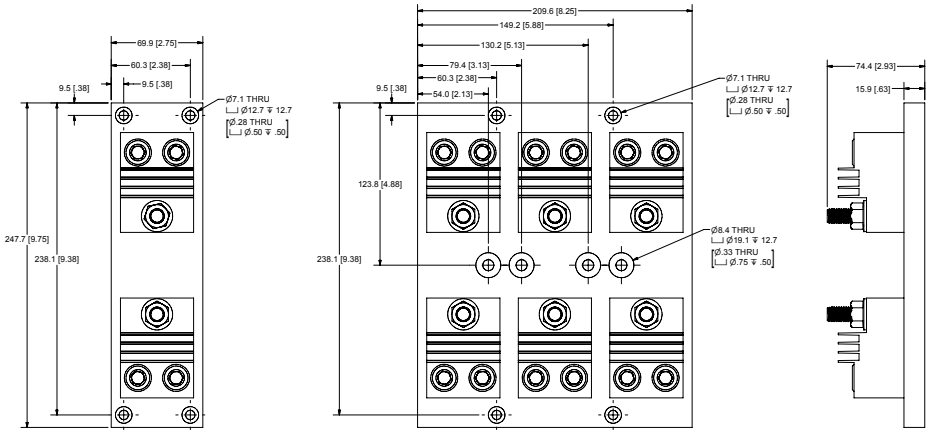

© 2023 Littelfuse, Inc.

LF SERIES CLASS G FUSE BLOCKS

480 V • 600 V



Description

All Littelfuse Class G fuse blocks offer snap-to-release DIN rail mounting and universal mounting holes. Class G fuse blocks are designed for use with time-delay current limiting Class G fuses.

Features/Benefits

- Universal mounting holes for easy replacement
- One hand release from DIN rail for most amperages
- Meet requirements for branch circuit protection

Specifications

Voltage Ratings	600 VAC (0–20 A) 480 VAC (25–60 A)
Ampere Ratings	0–60 A
Flammability Rating	UL94 V-0
Approvals	UL Listed (File: E14721) CSA Certified (File: LR7316)

Recommended Fuses

Time Delay
Series: SLC 26

Web Resources

For additional technical information visit:
littelfuse.com/lfg
littelfuse.com/fuseblocks

Ordering Information (Class G 600 V)

AMP RATING	POLES	ORDERING NUMBER				WIRE TYPE		BASE TEMP RATING	DIN RAIL MOUNT	TERMINAL INFORMATION		
		BASE PART NUMBER	SUFFIX							TERMINAL	WIRE RANGE	TORQUE
			BOX LUG	PRESSURE PLATE	SCREW							
15	1	LFG600151	CDINR	PQDINR	SQDINR	CU Only	Solid/Stranded	150° C	•	Box Lug	6-14 AWG	4.0 N-m (35 in-lbs)
	2	LFG600152	CDINR	PQDINR	SQDINR					Pressure Plate	10-14 AWG	2.3 N-m (20 in-lbs)
	3	LFG600153	CDINR	PQDINR	SQDINR					Screw	10-14 AWG	2.3 N-m (20 in-lbs)
20	1	LFG600201	CDINR	PQDINR	SQDINR			150° C	•	Box Lug	6-14 AWG	4.0 N-m (35 in-lbs)
	2	LFG600202	CDINR	PQDINR	SQDINR					Pressure Plate	10-14 AWG	2.3 N-m (20 in-lbs)
	3	LFG600203	CDINR	PQDINR	SQDINR					Screw	10-14 AWG	2.3 N-m (20 in-lbs)

Ordering Information (Class G 480 V)

AMP RATING	POLES	ORDERING NUMBER				WIRE TYPE		BASE TEMP RATING	DIN RAIL MOUNT	TERMINAL INFORMATION		
		BASE PART NUMBER	SUFFIX							TERMINAL	WIRE RANGE	TORQUE
			BOX LUG	PRESSURE PLATE	SCREW							
30	1	LFG480301	CDINR	PQDINR	SQDINR	CU Only	Solid/Stranded	150° C	•	Box Lug	6-14 AWG	4.0 N-m (35 in-lbs)
	2	LFG480302	CDINR	PQDINR	SQDINR					Pressure Plate	10-14 AWG	2.3 N-m (20 in-lbs)
	3	LFG480303	CDINR	PQDINR	SQDINR					Screw	10-14 AWG	2.3 N-m (20 in-lbs)
60	1	LFG480601	CDINR	—	—	CU/Al		125° C	•	Box Lug	2-4 AWG	5.6 N-m (50 in-lbs)
	2	LFG480602	CDINR	—	—						6-14 AWG	2.8 N-m (25 in-lbs)
	3	LFG480603	CDINR	—	—							

© 2023 Littelfuse, Inc.

LF SERIES CLASS G FUSE BLOCKS

Dimensions mm (inches)

600 V 15 & 20 A
480 V 30 A

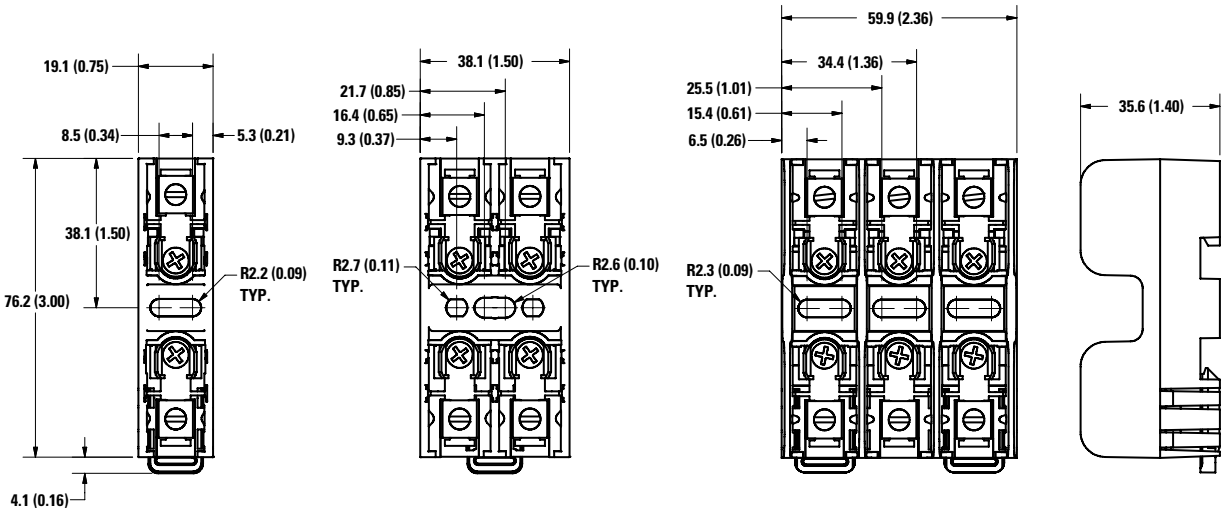

480 V 60 A

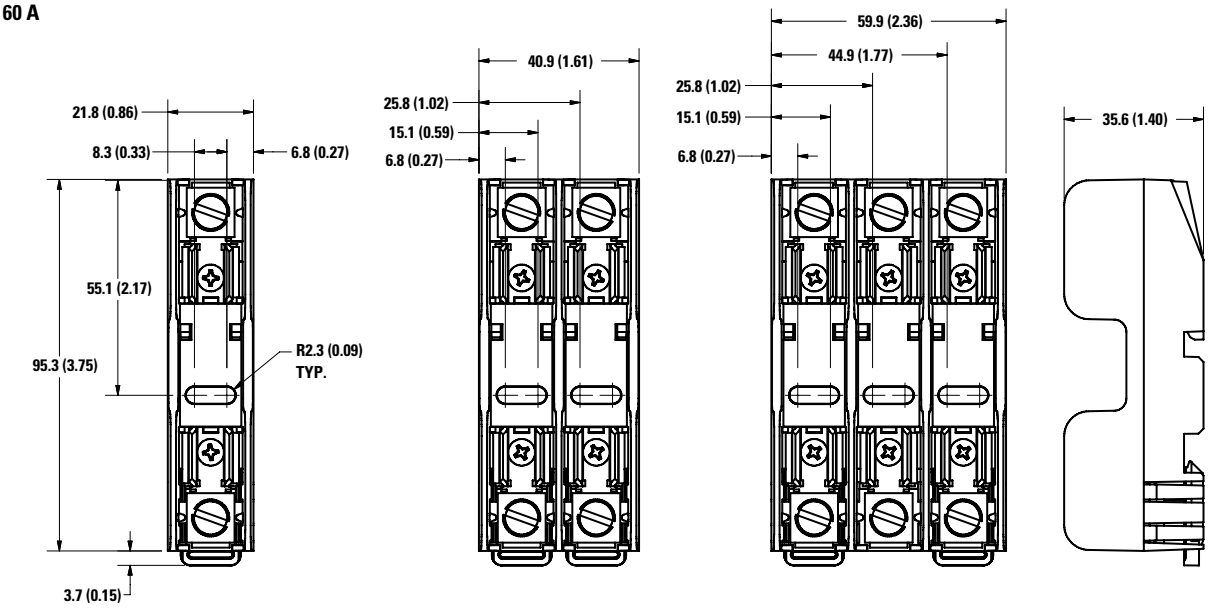

© 2023 Littelfuse, Inc.

LF SERIES CLASS CC/CD AND MIDGET (10x38 mm) FUSE BLOCKS

600 V



Description

The Littelfuse Class CC, CD and midget blocks offer generous space savings and enhanced value. DIN-rail mounting and universal mounting holes are available as well as an indication feature on all Class CD fuse blocks.

Features/Benefits

- Space-saving design
- Universal mounting holes for easy replacement
- Indication offered on CD blocks
- One hand release from DIN rail optional
- Rejection feature that prevents the insertion of fuses with lower interrupting rating or voltage ratings
- Clip design reduces resistance and heat
- Non DIN-rail fuse blocks have interlocking feature allowing ganging for any number of poles
- Covers available for all amperages to enhance safety
- Both hex and slot set screw options available on LFC Class CD 60 A box lugs

Specifications

Voltage Rating	600 V ac/dc
Ampere Ratings	L600M Midget (10x38): 30 A L600C Class CC: 30 A LFC Class CD: 60 A L600CM Class CC & Midget: 30 A
Dielectric strength	1200 V minimum
Materials	Clip/terminals: Tin-plated copper alloy Box lug: Copper Screw & captive pressure plate: Zinc-plated steel Base: Thermoplastic UL94 V-0 flammability rating
Withstand Rating (SCCR)	L60030C: 200 kA L60030M: 10 kA, 20 kA or 100 kA based on the Midget fuse used LFC600: 200 kA
Approvals	L600M: UL Recognized (File: E14721) CSA Certified (File: LR7316) L600C: UL Listed (File: E14721) CSA Certified (File: LR7316) LFC: UL Listed (File: E14721) CSA Certified (File: LR7316) L600CM: UL Recognized (File: E14721) CSA Certified (File: LR7316)
Environmental	RoHS Compliant, Lead (Pb) Free

Recommended Fuses

Class CC Blocks: CCMR, KLDR, KLKR
Class CM Block: Fuses same as CC & Midget Blocks
Class CD Blocks: CCMR
Midget Blocks: BLF, BLN, BLS, FLA, FLM, FLQ, FLU, KLK, KLKD, KLQ

Web Resources

Sample requests and technical downloads:
Littelfuse.com/fuseblocks

Ordering Information (L600C Class CC and L600M Midget 30 A)

AMP RATING	POLES	CLASS CC ORDERING NUMBER		MIDGET ORDERING NUMBER		CONNECTOR TYPE	TORQUE	WIRE RANGE	WIRE TYPE		BASE TEMP	COVER ORDERING NUMBER†
		NON-DIN*	DINR	NON-DIN*	DINR							
30	1	L60030C1C	L60030C1CDINR	L60030M1C	L60030M1CDINR	Box Lug	4.0 N-m (35 in-lbs)	6–14 AWG	CU Only	Solid / Stranded	125 °C	SPL001
	2	L60030C2C	L60030C2CDINR	L60030M2C	L60030M2CDINR							
	3	L60030C3C	L60030C3CDINR	L60030M3C	L60030M3CDINR							
30	1	L60030C1PQ	L60030C1PQDINR	L60030M1PQ	L60030M1PQDINR	Pressure Plate w/Q.C. Terminal	2.3 N-m (20 in-lbs)	10–14 AWG			125 °C	SPL001
	2	L60030C2PQ	L60030C2PQDINR	L60030M2PQ	L60030M2PQDINR							
	3	L60030C3PQ	L60030C3PQDINR	L60030M3PQ	L60030M3PQDINR							
30	1	L60030C1SQ	L60030C1SQDINR	L60030M1SQ	L60030M1SQDINR	Screw w/Q.C. Terminal	2.3 N-m (20 in-lbs)	10–14 AWG			125 °C	SPL001
	2	L60030C2SQ	L60030C2SQDINR	L60030M2SQ	L60030M2SQDINR							
	3	L60030C3SQ	L60030C3SQDINR	L60030M3SQ	L60030M3SQDINR							

Ordering Information (L600CM Class CC and Midget Combination 30 A)

AMP RATING	POLES		COMBINATION 2 CLASS CC / 1 MIDGET ORDERING NUMBER		CONNECTOR TYPE	TORQUE	WIRE RANGE	WIRE TYPE	BASE TEMP	COVER ORDERING NUMBER†
	CLASS CC	MIDGET	NON-DIN	DINR						
30	2	1	L60030CM3PQ	—	Pressure Plate w/Q.C. Terminal	2.3 N-m (20 in-lbs)	10–14 AWG	CU Only Solid / Stranded	125 °C	SPL001

* Gangable – † *Covers sold individually. One cover needed for each pole.*

LF SERIES CLASS CC/CD AND MIDGET (10x38 mm) FUSE BLOCKS

Ordering Information (LFC Class CD 60 A)

AMP RATING	POLES	INDICATING ORDERING NUMBER	NON-INDICATING ORDERING NUMBER	CONNECTOR TYPE	TORQUE	WIRE RANGE	WIRE TYPE		BASE TEMP RATING	DIN RAIL MOUNT	COVER ORDERING NUMBER†
60	1	LFC600601CID	LFC600601C	Box Lug with Slot Screw	5.6 N-m (50 in-lbs)	2–4 AWG	CU-AL	Solid / Stranded	125 °C	•	LFC60060FBC
	2	LFC600602CID	LFC600602C								
	3	LFC600603CID	LFC600603C		2.8 N-m (25 in-lbs)	6–14 AWG					
60	1	LFC600601CID-HX	LFC600601C-HX	Box Lug with Hex Screw	5.6 N-m (50 in-lbs)	2–4 AWG					
	2	LFC600602CID-HX	LFC600602C-HX								
	3	LFC600603CID-HX	LFC600603C-HX		2.8 N-m (25 in-lbs)	6–14 AWG					

† *Covers sold individually. One cover needed for each pole.*

Dimensions mm (inches)

L600M-DINR Midget and L600C-DINR Class CC 30 A

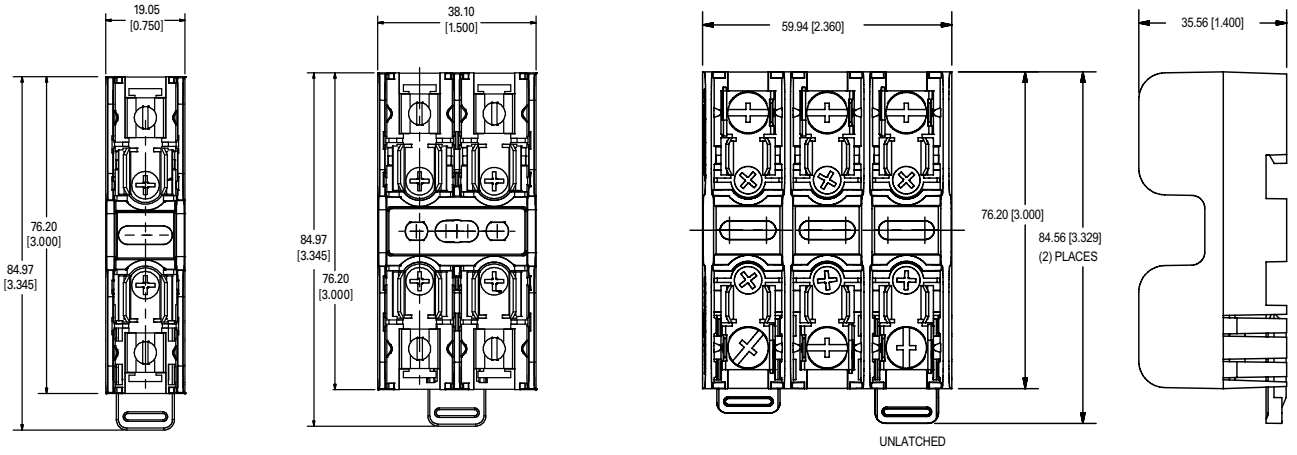

L600M Midget, L600C Class CC and L600CM Combination 30 A

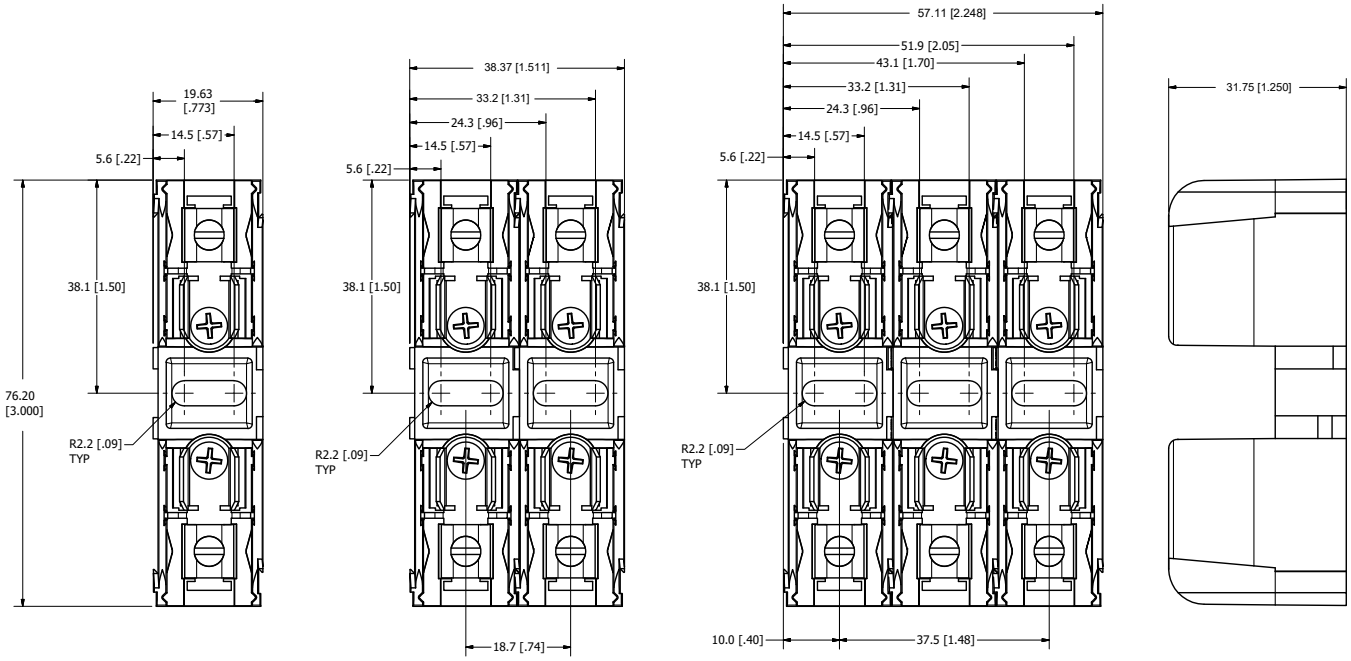

© 2023 Littelfuse, Inc.

LF SERIES CLASS CC/CD AND MIDGET (10x38 mm) FUSE BLOCKS

Dimensions mm (inches)

LFC Class CD 60 A

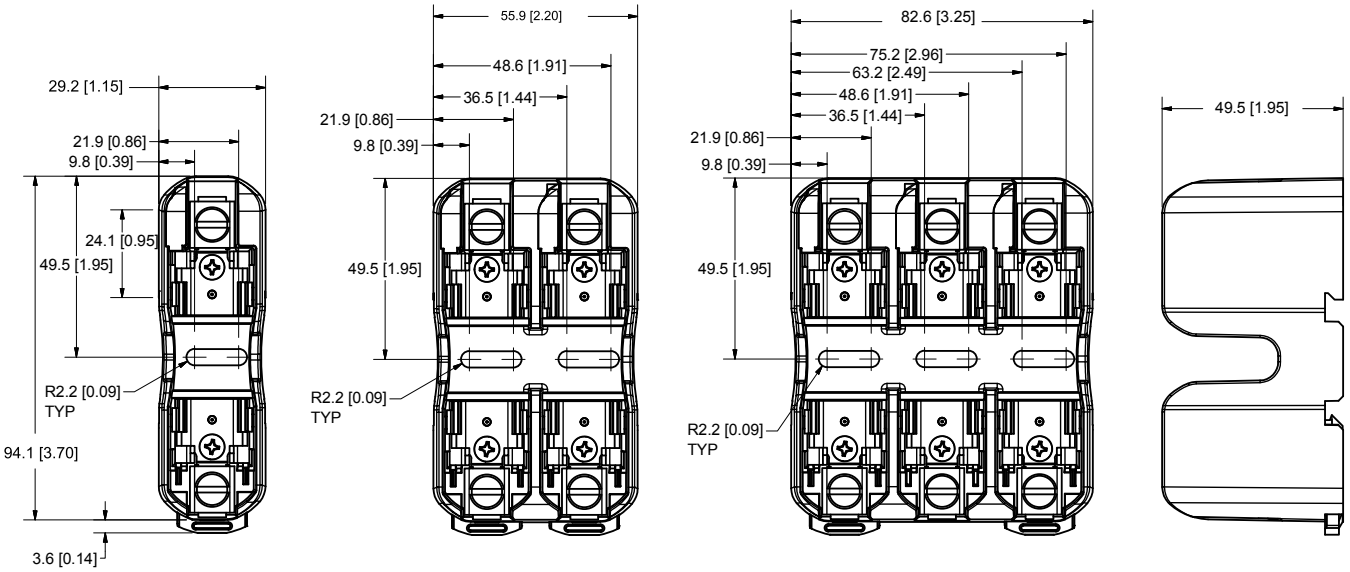

BOARD MOUNT MIDGET (10X38 mm) FUSE HOLDER

600 V



Description

The PC board-mounted midget fuse holder is a one-piece holder designed to provide a more robust and secure solution. It offers a smaller footprint and flexible mounting options.

For use with Midget-style fuses and fuse covers, it is UL Recognized and can be covered for additional protection.

Features/Benefits

- Through hole PCB mounting
- Robust and secure block design
- All-in-one package offers easy installation
- Space saving footprint
- Touch Safe cover/puller available
- 3-pole configurations

Applications

- HVAC market
- Industrial manufacturing
- Mass production facilities

SPL001PCB Cover

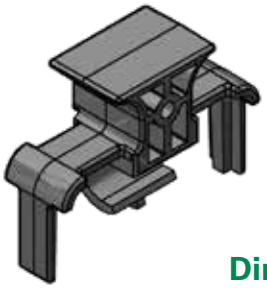

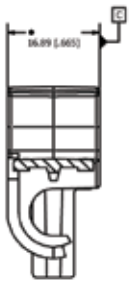

Dimensions mm (inches)

Specifications

Voltage Rating	600 V ac/dc
Amperage Rating	30 A
Approval	UL Recognized (File: E14721)
Mounting Method	Through hole solder/PCB

Ordering Information

	CATALOG NUMBER	ORDERING NUMBER
Block	L60030M3PCB	L60030M3PCB
Cover*	SPL001PCB	SPL0001PCBT

*Covers are single pole—need to order a quantity of 3 for each block.

Recommended Fuses

Midget (10 x 38 mm) series.....30

Web Resources

For additional technical information visit:
Littelfuse.com/fuseblocks

Dimensions mm (inches)

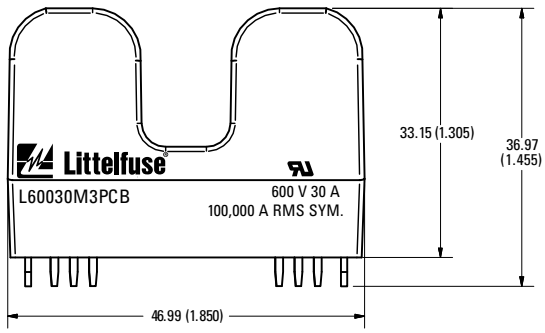

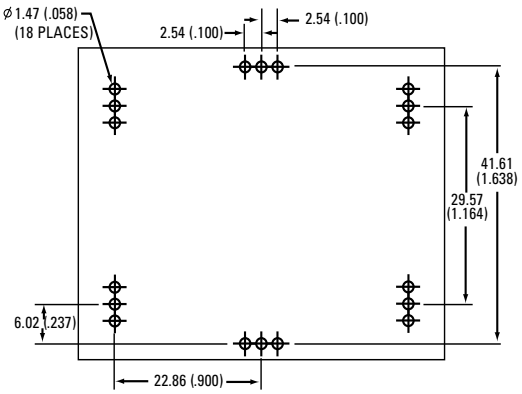

6 Fuse Blocks and Holders

© 2023 Littelfuse, Inc.

CLASS CC AND MIDGET FUSE BLOCK ACCESSORIES

FBDIN1 Rail Adapter



Features/Benefits

- DIN Rail adaptor for 30 A Midget, Class CC and Class G fuse blocks
- Patented design with no tools necessary for installation
- Permits snap-mounting of 30 A Midget, Class CC and Class G fuse blocks to standard and low profile 35 mm symmetrical DIN rails and 32 mm asymmetrical DIN rails
- Easy removal via disconnect tab

Web Resources

For additional technical information visit:
littelfuse.com/fbdin1

Dimensions Inches

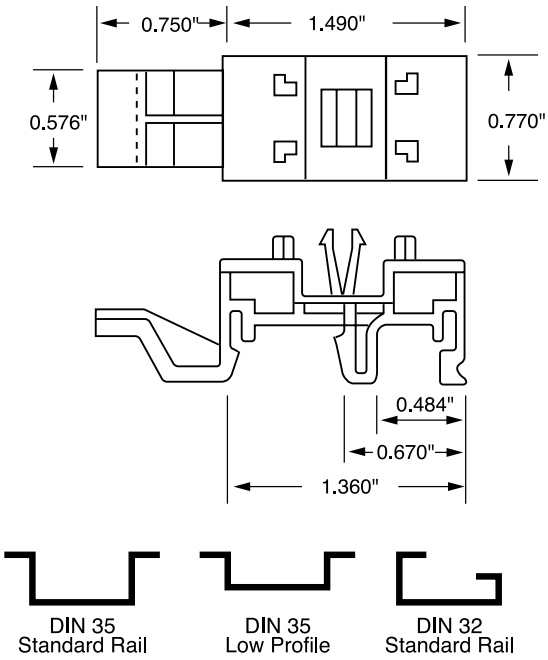

Recommended Fuse Blocks

Midget-Style and Class CC
Class G
New DIN-rail mountable fuse holders available.

SPL001 Cover Puller



Features/Benefits

- 600 V 1/10-30 A Class CC and Midget fuse cover puller that offers increased protection when removing fuses
- Simple removal without the need for a separate puller
- Meets Dead-Front requirements
- Easily gangable with 1/8" diameter wire
- For use with all 600 V Class CC and Midget 1/10-30 A fuses
- Label provided for easy fuse identification

Dimensions Inches

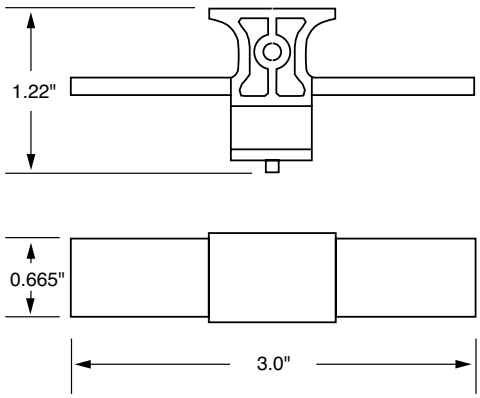

Recommended Fuse Blocks

L60030C
L60030M

Web Resources

For additional technical information visit:
littelfuse.com/spl001

LF SERIES FUSE BLOCK COVERS



Specifications

Connection	Snap to fuse body
Molded Base	Black thermoplastic
Flammability Rating	UL94 V-0
Approvals	UL Listed (File: E184929) CSA Certified (File: 007316_0_000 Class 6225-01)

Features/Benefits

- Added safety to personnel
- Ventilated to avoid fuse derating
- Reusable
- UL listed and CSA certified
- Available for Class H/R, Class J, Class T and Class CD
- Convenient snap-on feature
- Allows visibility of indicator fuse block light

Description

Littelfuse fuse block covers protect personnel from accidentally coming into contact with energized parts. Covers are for use with Littelfuse UL class fuse blocks. Review the ordering information or contact the factory for available covers.

Web Resources

Downloadable CAD drawings, dimensions and other technical information, visit
Littelfuse.com/fuseblocks

Ordering Information

UL CLASS	FUSE BLOCK BASE PART NUMBER*	VOLTAGE	AMPERAGE	COVER ORDERING NUMBER
Class H/R	LFH25030 / LFR25030	250	30	LFH25030FBC
Class H/R	LFH25060 / LFR25030	250	60	LFH25060FBC
Class H/R	LFH25100 / LFR25100	250	100	LFH25100FBC
Class H/R	LFH60030 / LFR60030	600	30	LFH60030FBC
Class H/R	LFH60060 / LFR60060	600	60	LFH60060FBC
Class H/R	LFH60100 / LFR60100	600	100	LFH60100FBC
Class J	LFJ60030	600	30	LFJ60030FBC
Class J	LFJ60060	600	60	LFJ60060FBC
Class J	LFJ60100	600	100	LFJ60100FBC†
Class T	LFT30030	300	30	LFT30030FBC
Class T	LFT30060	300	60	LFT30060FBC
Class T	LFT30100	300	100	LFT30100FBC
Class T	LFT60030	600	30	LFT60030FBC
Class T	LFT60060	600	60	LFT60060FBC
Class T	LFT60100	600	100	LT60100FBC
Class T	LFT60200	600	200	LT60200FBC
Class T	LFT60400	600	400	LT60400FBC
Class T	LFT60600	600	600	LT60600FBC
Class CD	LFC60060	600	60	LFC60060FBC
Class CC	L60030C	600	30	SPL001

* Part number shown excludes reference to number of poles and terminal type
† Cover is not compatible with 70-100 A JLS series fuses

© 2023 Littelfuse, Inc.

LF SERIES FUSE BLOCK COVERS

Dimensions in mm (inches)

Class H/R

250 V 30 A

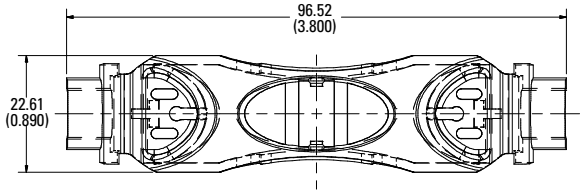

250 V 60 A

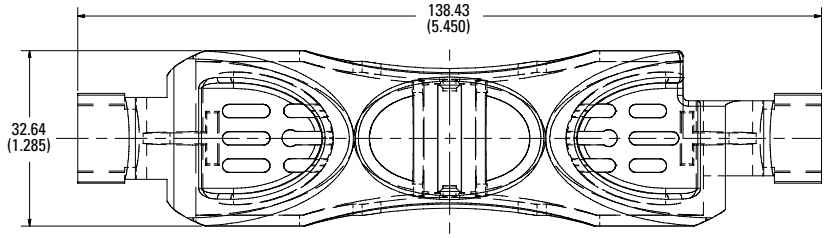

250 V 100 A

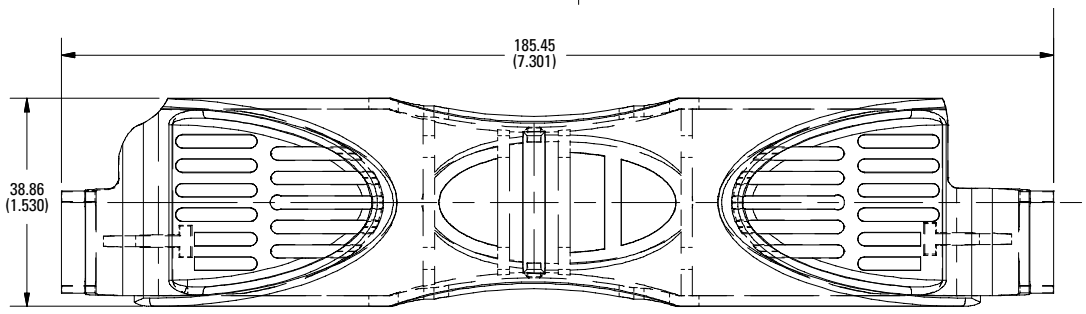

600 V 30 A

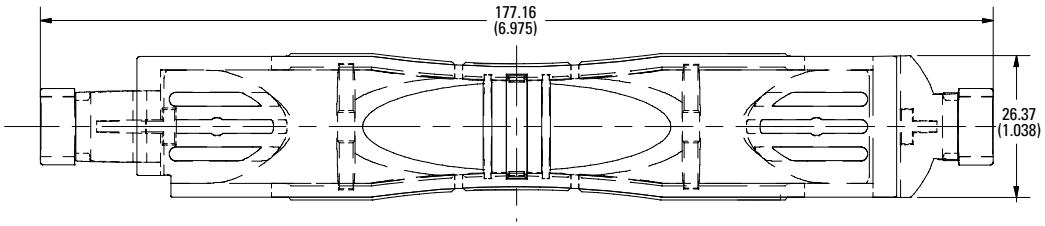

600 V 60 A

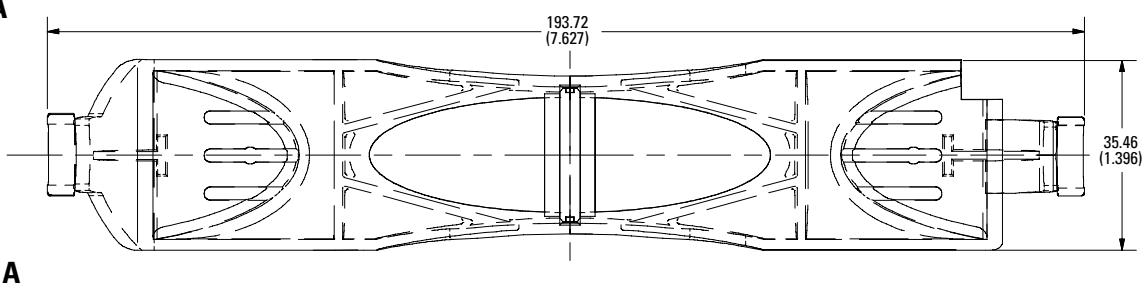

600 V 100 A

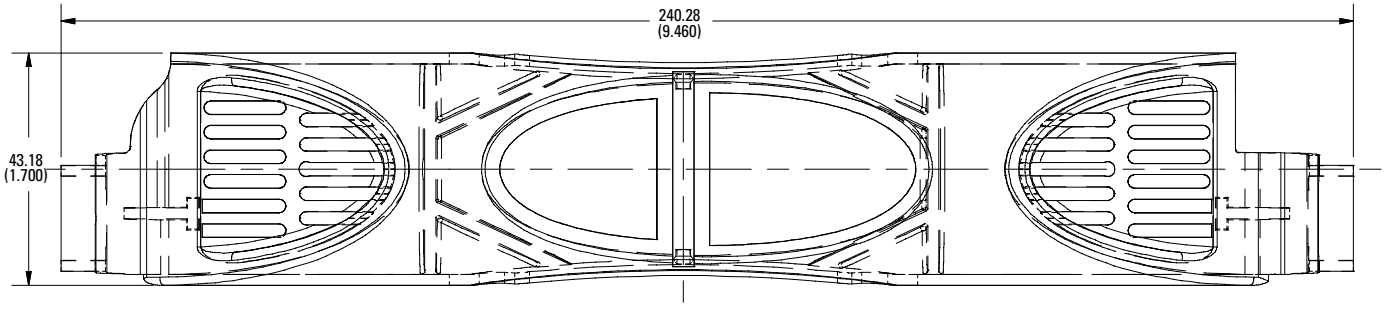

Also available at **Littelfuse.com/fuseblocks**

© 2023 Littelfuse, Inc.

LF SERIES FUSE BLOCK COVERS

Dimensions in mm (inches)

Class J

600 V 30 A

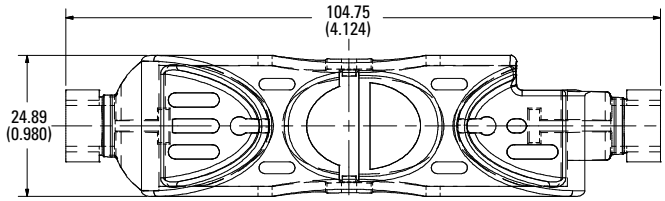

600 V 60 A

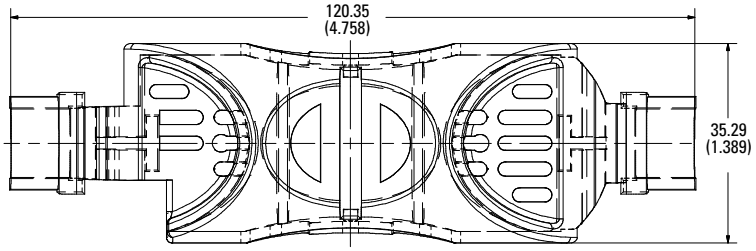

600 V 100 A

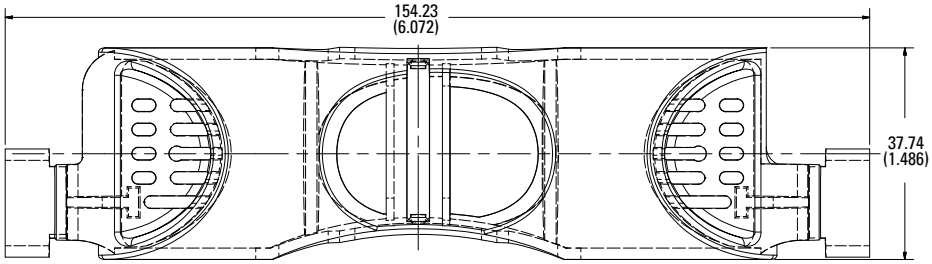

Dimensions in mm (inches)

Class T

300 V 30 A

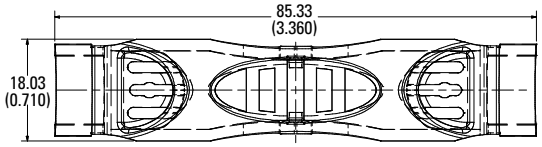

300 V 60 A

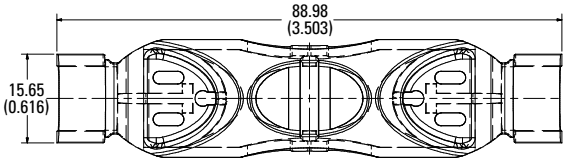

300 V 100 A

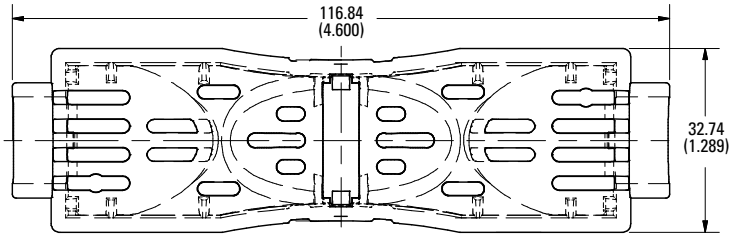

Also available at **Littelfuse.com/fuseblocks**

© 2023 Littelfuse, Inc.

LF SERIES FUSE BLOCK COVERS

Dimensions in mm (inches)

Class T

600 V 30 A

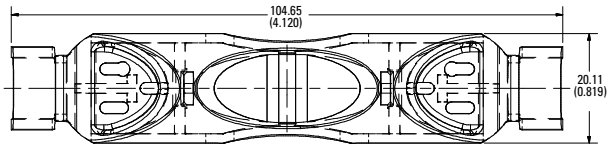

600 V 60 A

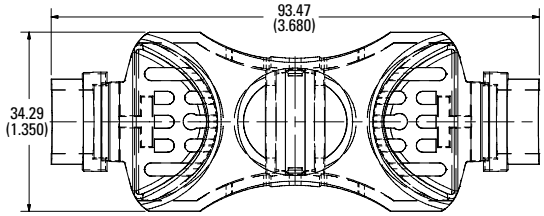

600 V 100 A

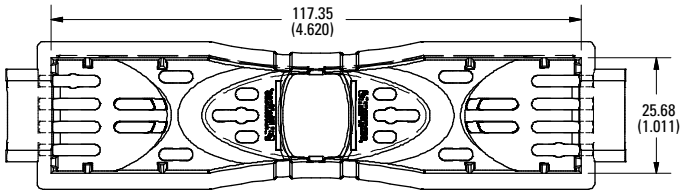

600 V 200 A

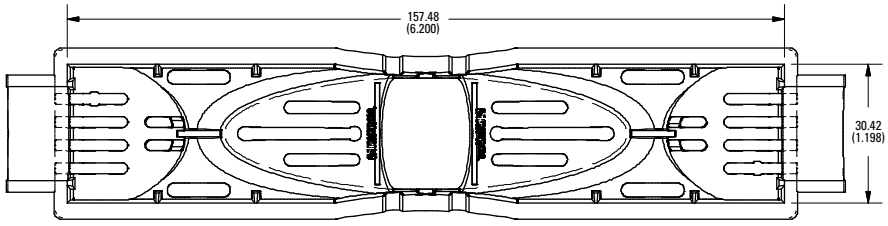

600 V 400 A

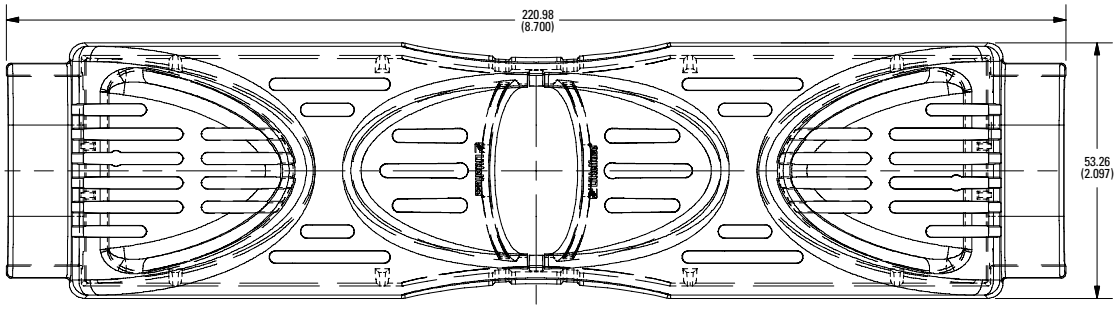

600 V 600 A

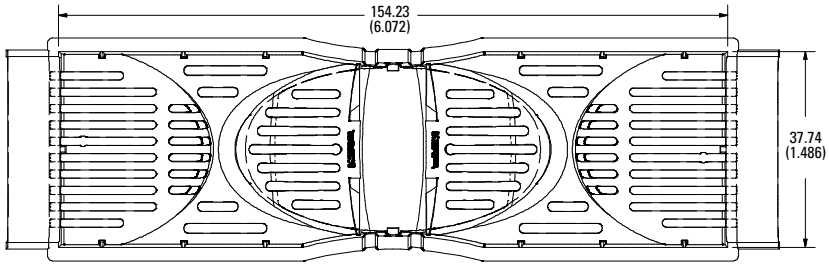

Dimensions in mm (inches)

Class CD

600 V 60 A

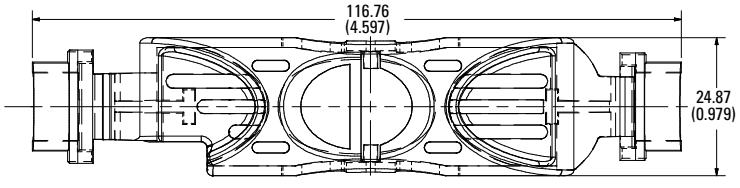

Also available at **Littelfuse.com/fuseblocks**

© 2023 Littelfuse, Inc.

LFXV15 SERIES SOLAR FUSE BLOCK & COVER

1500 V • 35–60 A

REACH RoHS



Description

The Littelfuse LFXV15 series fuse block and cover is designed to hold 1500 V size 20 x 127 mm fuses rated 35–60 amperes. Suitable for photovoltaic systems (string and high-capacity combiner boxes) with fault currents up to 50 kA.

With available ampere ratings up to 60 A, more strings can be pre-combined in harnesses to reduce the number of inputs into combiner boxes, thereby decreasing installation time and labor costs.

Features/Benefits

- Dead-front cover design offers personnel protection
- Ventilated design keeps the fuse running cooler, even at high ambient temperatures and current ratings, to increase fuse longevity
- Narrower width accommodates more blocks in a panel to maximize space
- Designed for easy fuse removal and replacement to minimize maintenance time. No tools required
- 35 mm DIN-rail mounting option for quick assembly and installation
- Accepts both wire and busbar for added flexibility
- Positive lock feature secures the fuse puller in the block when the fuse is absent

Recommended Fuses

Littelfuse SPXV 20 x 127 mm fuses rated 35–60 amperes.

Specifications

Voltage Ratings	1500 V dc
Amperage Rating	60 A
Withstand Rating	50 kA
Power Acceptance	24.1W Maximum
Fuse Size	20 x 127 mm
Material	Thermoplastic Fuse Clip: Tin-plated copper alloy Screws: Tin-plated aluminum
Operating Temperature	-55 °C to +125 °C
Flammability Rating	UL94 V-0
Temperature Stability	Base: 130 °C Cover: 140 °C
Approvals	Block: UL 4248-19 Listed (File E345481) Cover: UL Listed Fuse Accessory (File E184929)
Environmental	RoHS compliant, Lead (Pb) free, REACH
Recommended DIN Rail	TH 35-7,5 per IEC 60715
Country of Origin	China

WIRE TYPE	
75 °C or 90 °C CU Only Stranded	UL Class B and Class C wire
	IEC Class 5 Flexible Wire (self-certified)

BUSBAR SPECIFICATIONS			
TERMINAL	THICKNESS	WIDTH	TORQUE
Maximum	0.250 in (6.35 mm)	0.290 in (7.37 mm)	25 lb-in (2.8 N-m)
Minimum	0.125 in (3.18 mm)	0.200 in (5.08 mm)	25 lb-in (2.8 N-m)

Web Resources

Download the complete datasheet and other technical documents: **Littelfuse.com/LFXV15**

Ordering Information

VOLTAGE (V dc)	AMPERE RATING	POLES	FUSE BLOCK & COVER ORDERING NUMBER	CONNECTOR TYPE	DRIVE	TORQUE	WIRE RANGE	WIRE TYPE	
1500	60	1	LFXV15060-BC*	Box Lug	3/16 Inch Hex	5.6 N-m (50 lb-in)	2–4 AWG (35–25 mm²)	CU only	Stranded
						2.8 N-m (25 lb-in)	6–14 AWG (16–2.5 mm²)		

*For replacement only: Fuse Block LFXV150601C or Cover LFXV15060FBC

© 2023 Littelfuse, Inc.

LFXV15 SERIES SOLAR FUSE BLOCK & COVER

LFXV15 Features & Benefits

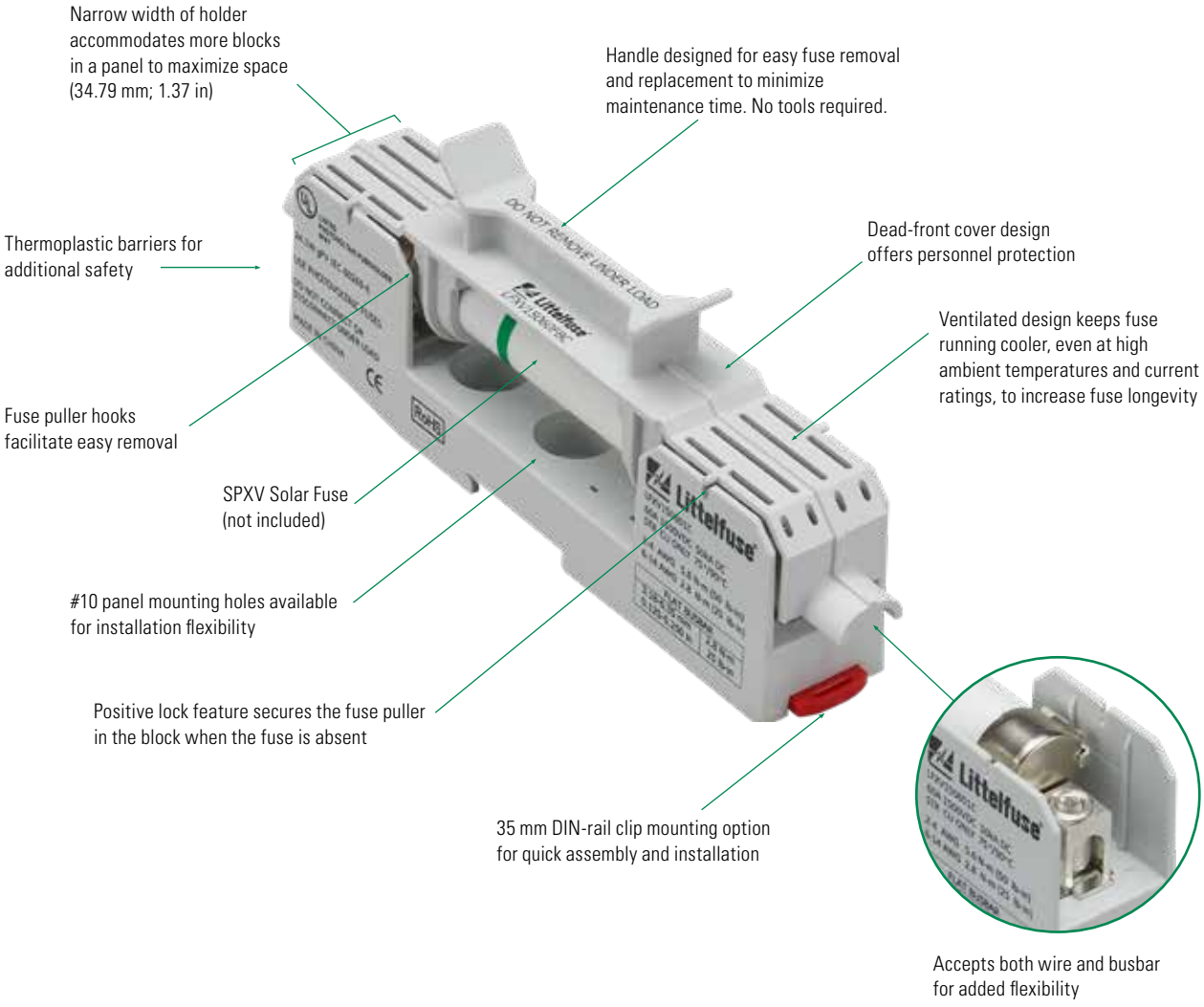

LFXV15 SERIES SOLAR FUSE BLOCK & COVER

Dimensions Millimeters (in)

Fuse Block & Cover Assembly: LFXV15060-BC

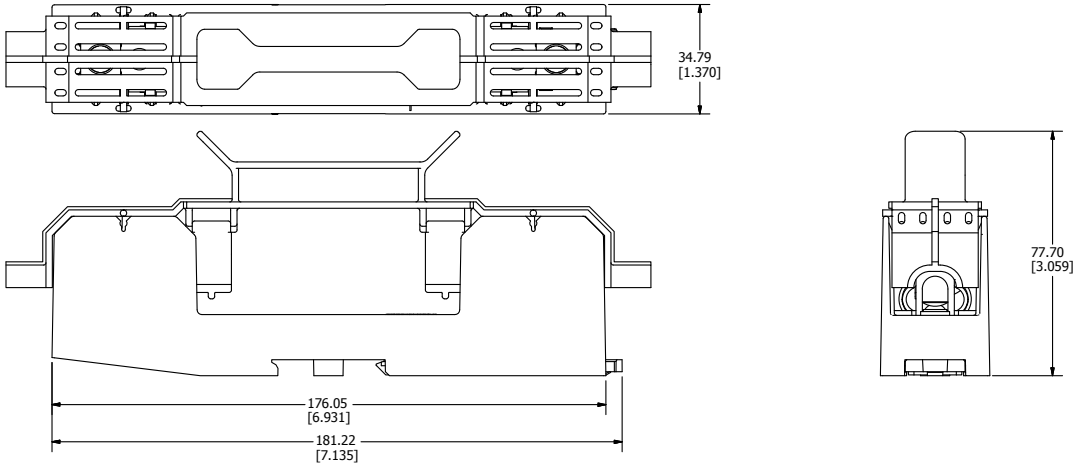

Fuse Cover: LFXV15060FBC

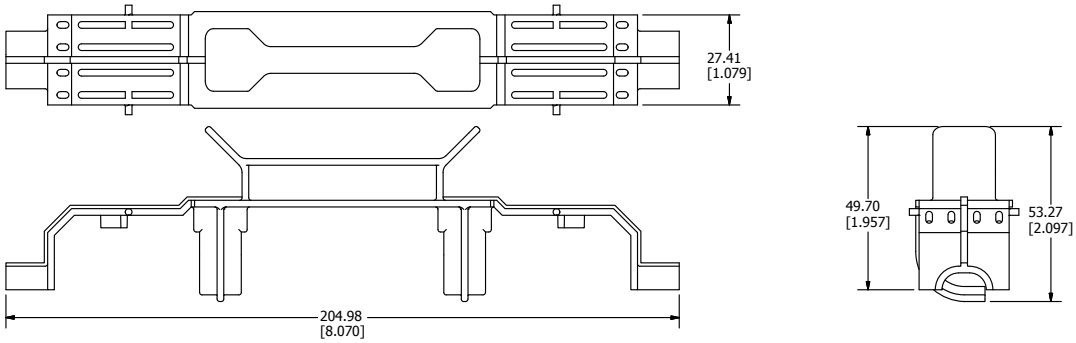

Fuse Block: LFXV150601C

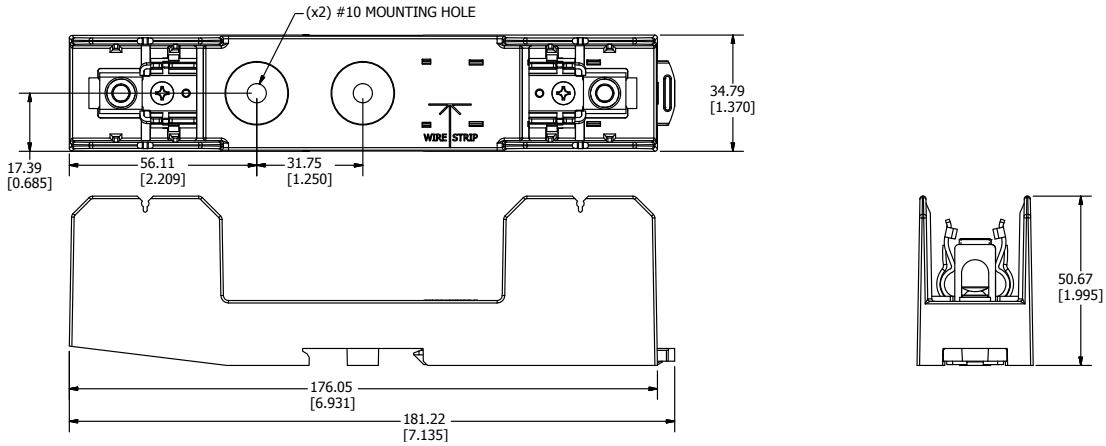

Look for this logo to indicate products that are used in solar applications. Visit our website **Littelfuse.com/Solar** for the latest updates on approvals, certifications, and new products.

© 2023 Littelfuse, Inc.

LFPXV TOUCH-SAFE FUSE HOLDERS

1500 V • 30 A



Description

The Littelfuse LFPXV fuse holder is designed to hold 1500 V 10x85 mm fuses.

Features/Benefits

- Finger-Safe design offers personnel protection
- No fuse pullers or tools required for fuse removal
- 35 mm DIN Rail Mountable
- Evaluated for use with copper alloy busbars
- Compact design

Recommended Fuses

Littelfuse SPXV/SPXV-S Fuses

Web Resources

Download the complete datasheet and other technical documents: **Littelfuse.com/LFPXV**

Specifications

Voltage Ratings	1500 V dc
Amperage Rating	32 A
SCCR Rating	50 kA
Power Dissipation:	8W Maximum
Fuse Type	10x85 mm
Material	Thermoplastic Fuse Clip: Silver plated copper alloy Screws: Zinc plated steel
Operating Temperature	-55 °C to +125 °C
Flammability Rating	UL94 V-0
Temperature Stability	Body: 130 °C Carrier: 140 °C
Approvals	UL 4248-19 Listed (File: E345481) IEC 60269-6
Environmental	RoHS compliant, Lead (Pb) free, REACH
Recommended DIN Rail	TH 35-7,5 per IEC 60715
Country of Origin	China

WIRE TYPE	
75 °C or 90 °C CU Only Stranded	UL Class B and Class C wire
	AlphaWire PV series Photovoltaic Wire
	IEC Class 5 Flexible Wire

BUSBAR SPECIFICATIONS			
TERMINAL	THICKNESS	WIDTH	TORQUE
Maximum	0.188 in (4.78 mm)	0.290 in (7.37 mm)	24–28 lb-in (2.71–3.16 N-m)
Minimum	0.125 in (3.18 mm)	0.200 in (5.08 mm)	

Ordering Information

SERIES	VOLTAGE (Vdc)	POLES	CATALOG NUMBER	ORDERING NUMBER	PACK QTY	TERMINAL INFORMATION			
						TERMINAL TYPE	NUMBER OF WIRES	WIRE SIZE	TORQUE
LFPXV	1500	1	LFPXV001	LFPXV0001Z	20	Box Lug	1	4–14 AWG (25–2.5 mm²)	24–28 lb-in (2.71–3.16 N-m)
							1	16–18 AWG (1.5–0.75 mm²)	18–22 lb-in (2.03–2.49 N-m)
							2*	6–14 AWG (16–2.5 mm²)	26–30 lb-in (2.94–3.69 N-m)
							2*	16–18 AWG (1.5–0.75 mm²)	20–24 lb-in (2.26–2.71 N-m)

*Must be the same wire type and cross sectioned size

Look for this logo to indicate products that are used in solar applications. Visit our website **littelfuse.com/solar** for the latest updates on approvals, certifications, and new products.

© 2023 Littelfuse, Inc.

LFJ1000 SERIES SOLAR FUSE BLOCKS

1000 Vdc • Clip-to-Box • Stud-to-Stud • Clip-to-Stud



Clip-to-Box Stud-to-Stud Clip-to-Stud

Description

The LFJ1000 series fuse block is specifically designed for the Littelfuse SPFJ 1000 V Solar Fuse. It meets UL electrical requirements, is available in multiple amperages, and comes in a variety of fuse mounting and termination configurations; fuse clip to box lug, fuse stud to wire stud and fuse clip to wire stud.

Features/Benefits

- Narrow width increases space savings
- Range of amperages to match all SPFJ fuse options
- Box Lug termination style accommodates a wide range of cable sizes
- Stud-mounted option increases convenience
- Approval for use with copper or aluminum lugs allowing for design flexibility

Specifications

Voltage Ratings	1000 Vdc
Ampere Ratings	200, 400, 450 A
Flammability Rating	UL94 V-0
Termination Type	Box Lug or Stud Mount
Base Temp Rating	130° C
Approvals	UL 4248-18 Listed File: E345481 Vol. 1
Environmental	RoHS Compliant

Recommended Fuses

SPFJ Solar Series 63

Web Resources

Download CAD drawings, dimensions and other technical information: **littelfuse.com/LFJ1000**

Ordering Information

(Clip-to-Box Lug 1000 V)

AMPERAGE	ORDERING NUMBER	INTERRUPT RATING	WIRE RANGE STANDARD (METRIC)	WIRE TYPE		RECOMMENDED TORQUE
200	LFJ102001C	20 kA	250 kcmil - #6 (127mm² - 16mm²)	Cu/Al	Solid/ Stranded	275 in-lb (31.1 N-m)
400	LFJ104001C	10 kA	350 kcmil - 1/0 (177mm² - 55mm²)			275 in-lb (31.1 N-m)
450	LFJ104501C	20 kA	500 kcmil - #4 (253mm² - 25mm²)			375 in-lb (42.4 N-m)

(Stud-to-Stud 1000 V)

AMPERAGE	ORDERING NUMBER	INTERRUPT RATING	RECOMMENDED TORQUE		MAX. BUSBAR THICKNESS	RECOMMENDED BASE TORQUE	
			FUSE	TERMINAL		BOLT SIZE	TORQUE
200	LFJ102001STST	20 kA	65 in-lb (7.3 N-m)	200 in-lb (22.6 N-m)	.774" (19.66 mm)	1/4" 5/16"	30-40 in-lb 40-50 in-lb
400	LFJ104001STST	10 kA	170 in-lb (19.2 N-m)	200 in-lb (22.6 N-m)	.555" (14.10 mm)		
450	LFJ104501STST	20 kA	300 in-lb (33.9 N-m)	300 in-lb (33.9 N-m)	.570" (14.18 mm)		

(Clip-to-Stud 1000 V)

AMPERAGE	ORDERING NUMBER	INTERRUPT RATING	RECOMMENDED TORQUE	MAX. BUSBAR THICKNESS	RECOMMENDED BASE TORQUE	
			TERMINAL		BOLT SIZE	TORQUE
200	LFJ102001CST	20 kA	200 in-lb (22.6 N-m)	.774" (19.66 mm)	1/4" 5/16"	30-40 in-lb 40-50 in-lb
400	LFJ104001CST	10 kA	200 in-lb (22.6 N-m)	.555" (14.10 mm)		
450	LFJ104501CST	20 kA	300 in-lb (33.9 N-m)	.570" (14.18 mm)		

© 2023 Littelfuse, Inc.

LFJ1000 SERIES SOLAR FUSE BLOCKS

1000 Vdc

Dimensions mm (inches)

Clip-to-Box

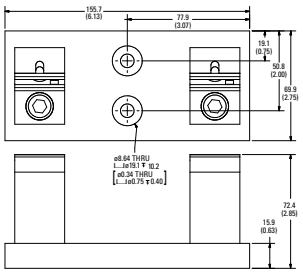

200 A

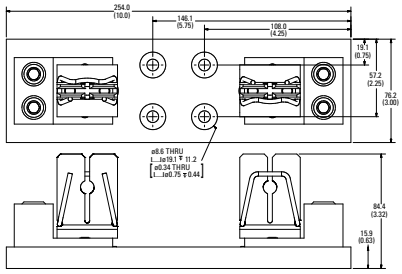

400 A

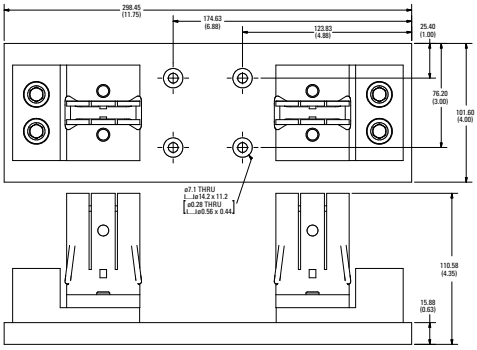

450 A

Stud-to-Stud

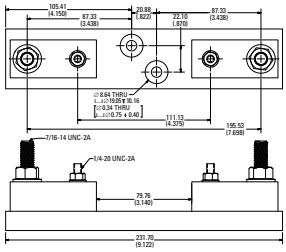

200 A

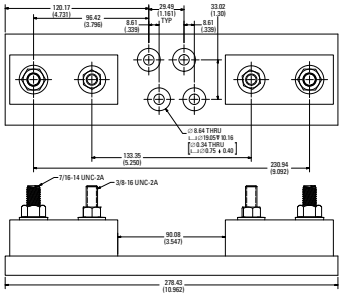

400 A

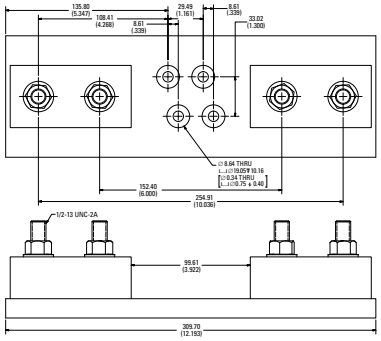

450 A

Clip-to-Stud

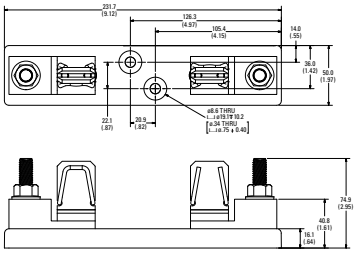

200 A

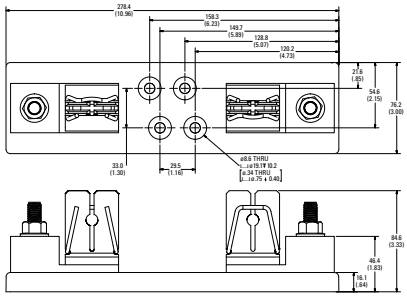

400 A

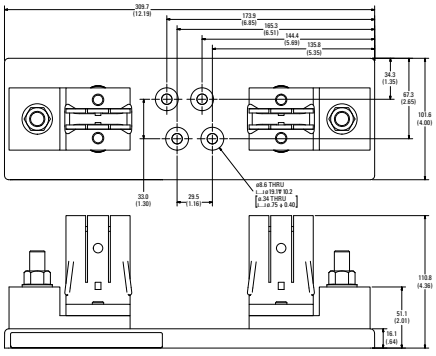

450 A

Look for this logo to indicate products that are used in solar applications. Visit our website **Littelfuse.com/solar** for the latest updates on approvals, certifications, and new products.

© 2023 Littelfuse, Inc.

LPHV POWR-SAFE FUSE HOLDERS

1000 VDC



Description

The Littelfuse LPHV fuse holder is designed to house 1000 V fuses. It is not designed for load break but is ideal for isolating photovoltaic module strings for maintenance and meets UL requirements for 1000 V solar fuse protection

Features/Benefits

- Touch-safe design offers protection when replacing fuses
- Compact design
- 35 mm DIN Rail Mountable
- Available in 1-, 2-, 3- and 4-pole configurations
- No fuse pullers or tools required for fuse removal

Multi-Pole Assembly Kit

Kits are used to create multi-pole holders from 1-pole LPHV fuse holders. Please contact factory for more information

Specifications

Voltage Rating	1000 VDC
Amperage Rating	30 A
SCCR Rating	20 kA
Power Dissipation	4 W Maximum
Fuse Type	10 X 38 mm up to 1000 VDC
Housing Material	Thermoplastic
Terminal Screws	Zinc Plated Steel, Phillips/Slotted Head
Pressure Plate	Nickel Plated Steel
Fuse Clip Material:	Silver Plated Copper Alloy
Operating Temperature	-55°C to +125°C
Flammability Rating	UL94 V-0
Approval	Self-certified 1000 VDC IEC 60269-2, -4, -6
Environmental	RoHS compliant, Lead (Pb) Free

Web Resources

Sample requests, downloadable CAD drawings and other technical information: **Littelfuse.com/lphv**

More information about solar applications:
Littelfuse.com/solar

Recommended Fuses

10x38 mm 1000 VDC Fuses

SPF 1000 V Series 62
FLU 1000 V Series 31

ORDERING NUMBER	DESCRIPTION
CYHP001	20 Connector Pincers & 10 handle Pins
CYHP002	Connector Pincer Only
CYHP003	Handle Pin Only

Ordering Information

SERIES	POLES	CATALOG NUMBER	ORDERING NUMBER	TERMINAL TYPE	WIRE TYPE		WIRE RANGE	TERMINAL TORQUE	ROHS
LPHV	1	LPHV001	LPHV0001Z	Pressure Plate	75° C or 90° C CU Only	Stranded / [Solid]	#8-14 AWG (2-10 mm²) / [#10-14 AWG (2-6 mm²)]	17.7 in-lbs (2 N-m)	•
LPHV	2	LPHV002	LPHV0002Z						•
LPHV	3	LPHV003	LPHV0003Z						•
LPHV	4	LPHV004	LPHV0004Z						•

Dimensions Inches (mm)

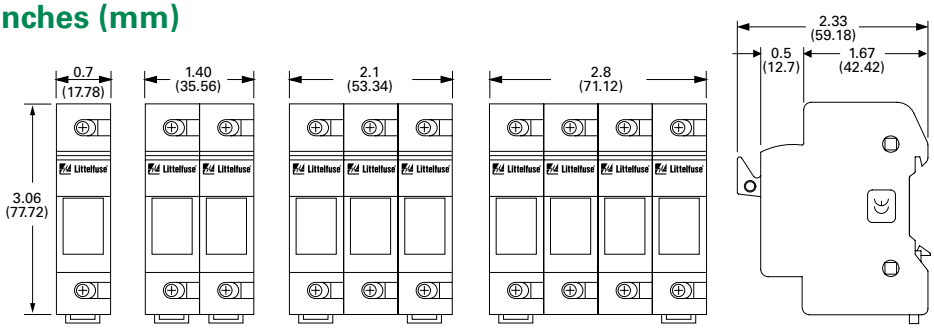

Look for this logo to indicate products that are used in solar applications. Visit our website **Littelfuse.com/solar** for the latest updates on approvals, certifications, and new products.

© 2023 Littelfuse, Inc.

LPSC / LPSM POWR-SAFE FUSE HOLDERS

600 V



Specifications

Voltage Rating	600 V ac/dc
Ampere Rating	30 A
Interrupting Rating	200 kA (Class CC) 100 kA (Midget)
Terminal Type	Pressure plate
Suggested Torque	17.7 in–lbs
Wire Range	#8–#14 CU
Housing	Thermoplastic
Fuse Clip	Silver plated copper
Zinc Plated Steel	Zinc plated steel
Terminal Screws	Nickel plated steel
Operating Temperature	-50 °C to +125 °C
Flammability Rating	UL 94 V-0
Approvals	UL Listed (LPSC File: E14721) UL Recognized (LPSM File: E14721) CSA Certified (LPSC/LPSM File: LR7316)
Environmental	RoHS Compliant, Lead (Pb) Free

	WIRE TYPE
75 °C CU Only	8–14 Stranded UL Class B and Class C wire
	10–14 Solid wire

Description

Littelfuse POWR-SAFE dead front holders provide optimum protection to personnel for Class CC and midget-style fuses.

Features/Benefits

- Indicating and non-indicating options available
- 1-, 2-, 3- and 4-pole configurations
- Easy installation and fuse removal with no additional pullers or tools required
- 35 mm DIN-rail mountable
- Ventilated design for cooler operation

Recommended Fuses

Class CC
Midget-style (10 x 38 mm)

Ordering Information

INDICATING		NON-INDICATING		FUSE TYPE	POLES
CATALOG NUMBER	ORDERING NUMBER	CATALOG NUMBER	ORDERING NUMBER		
LPSC001ID	LPSC0001ZXID	LPSC001	LPSC0001Z	Class CC	1
LPSC002ID	LPSC0002ZXID	LPSC002	LPSC0002Z	Class CC	2
LPSC003ID	LPSC0003ZXID	LPSC003	LPSC0003Z	Class CC	3
LPSC004ID	LPSC0004ZXID	LPSC004	LPSC0004Z	Class CC	4
LPSM001ID	LPSM0001ZXID	LPSM001	LPSM0001Z	Midget	1
LPSM002ID	LPSM0002ZXID	LPSM002	LPSM0002Z	Midget	2
LPSM003ID	LPSM0003ZXID	LPSM003	LPSM0003Z	Midget	3
LPSM004ID	LPSM0004ZXID	LPSM004	LPSM0004Z	Midget	4

Mulit-Pole Assembly Kit Ordering No. CYHP0001Z-KIT
(Kit contains 20 connector pincers & 10 handle pins)

Web Resources

Download CAD drawings and other technical information:
Littelfuse.com/lpsc
Littelfuse.com/lpsm

Dimensions Inches (mm)

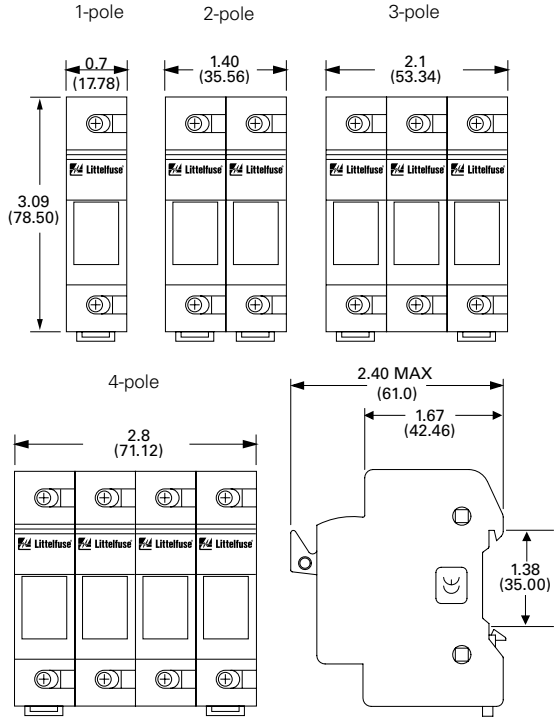

6

Fuse Blocks and Holders

LFPSJ POWR-SAFE DEAD FRONT CLASS J FUSE HOLDERS

600 V



Description

Littelfuse Class J POWR-SAFE Dead Front holders provide optimum protection to personnel and are UL Listed and CSA Certified.

Features

- Indicating and non-indicating options available
- IP20 degree of protection
- Dual LED indication distinguishes polarity in DC power applications
- Small compact design offers ultimate flexibility
- 35mm DIN Rail Mountable
- 1-, 2-, and 3-pole configurations
- Easy installation and fuse removal with no additional pullers or tools required

Dimensions mm (inches)

30 Amp

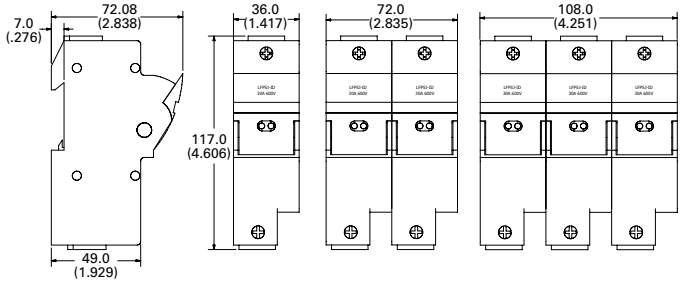

60 Amp

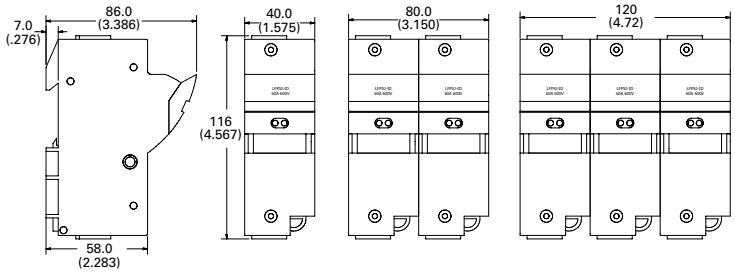

Note: These dimensions are for reference only. Please contact factory for additional information.

Specifications

Voltage Ratings	600 Vac/dc
Interrupting Rating	200 kA
Ampere Rating	30 and 60 A
LEDs	110 V – 600 V
Terminal Type	Pressure Plate
Material	Thermoplastic
Flammability Rating	UL94 V-0
Terminal Screws	Phillips / Slotted
Approvals	UL Listed (File: E14721) CSA Certified (File: 2529839
Environmental	RoHS compliant

Ordering Information

AMP	POLES	INDICATION	ORDERING NUMBER	PACK QTY.	WIRE TYPE	WIRE RANGE	TORQUE
30	1	–	LFPSJ301.Z	6	Stranded	0.75mm² – 1mm² 1.5mm² – 50mm² 18 – 1 AWG	2.5 N-m 4.0 N-m 35 lb-in
	2	–	LFPSJ302.Z	3			
	3	–	LFPSJ303.Z	2			
30	1	•	LFPSJ301.ZXID	6			
	2	•	LFPSJ302.ZXID	3			
	3	•	LFPSJ303.ZXID	2			
60	1	–	LFPSJ601.Z	6		2.5mm² – 50mm² 14 – 1 AWG	4.0 N-m 35 lb-in
	2	–	LFPSJ602.Z	3			
	3	–	LFPSJ603.Z	2			
60	1	•	LFPSJ601.ZXID	6			
	2	•	LFPSJ602.ZXID	3			
	3	•	LFPSJ603.ZXID	2			

Multi-Pole Assembly Kit

Kits are used to create multi-pole holders from 1-pole LFPSJ fuse holders. Please contact factory for more information.

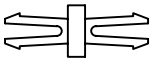

Connector Pincer

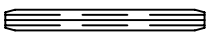

Handle Pin

AMP	POLES	PINCER QUANTITY	PIN QUANTITY	ASSEMBLY SETS	ORDERING NUMBER
30	2	30	10	10	LF3J2PAK
30	3	60	10	10	LF3J3PAK
60	2	30	10	10	LF6J2PAK
60	3	60	10	10	LF6J3PAK

Web Resources

Download CAD drawings and other technical information:
littelfuse.com/lfpsj

Recommended Fuses

Class J - JTD, JTD_ID, JLS 21

© 2023 Littelfuse, Inc.

BUS BAR SYSTEM

POWR-BAR Distribution



Description

A key objective for panel designers is safe distribution of power to multiple fuse holders in a compact design. The Littelfuse UL 508 Listed bus bar system eliminates most wire terminations in a timesaving package. A power distribution block and associated conductors are no longer needed to feed multiple POWR-SAFE fuse holders.

Features/Benefits

- Touch-safe design offers protection when replacing fuses
- Compact design
- 35 mm DIN Rail Mountable
- Available in one and three phase configurations
- No fuse pullers or tools required for fuse removal
- Can be cut down to optimal size

Recommended Fuse Holders

LPSM / LPSC (600 Vac/dc) 155
LPHV (1000 Vdc) 154

Web Resources

Download CAD drawings, dimensions and other technical information: **littelfuse.com/busbar**

Specifications

Voltage Ratings 600 Vac/dc
1000 Vdc*

Current Ratings

CROSS SECTION (mm^2)	18 mm^2	25 mm^2
END FED	80 A	100 A
CENTER FED	160 A	200 A

SCCR 10 kA, 100 kA†
Conductor Copper
Pitch 17.8 mm
Approvals UL 508 Listed (File E328654)
Environmental RoHS Compliant, Lead (Pb) free

*1 Phase 18 mm^2 rated 1000 Vdc up to 160 A when center fed
1 Phase 25 mm^2 rated 1000 Vdc up to 200 A when center fed
† When protected directly upstream by Class J 175 amperes max (18 mm^2 bus bar) and Class J 200 amperes max (25 mm^2 bus bar).

Ordering Information

1 PHASE, 18 mm^2		LENGTH (mm)
ORDERING NUMBER	POLES	
1PH3P18mm	3	50
1PH4P18mm	4	79
1PH6P18mm	6	104
1PH9P18mm	9	155
1PH12P18mm	12	208
1PH15P18mm	15	270
1PH57P18mm	57	1009

1 PHASE, 25 mm^2		LENGTH (mm)
ORDERING NUMBER	POLES	
1PH3P25mm	3	50
1PH4P25mm	4	79
1PH6P25mm	6	104
1PH9P25mm	9	155
1PH12P25mm	12	208
1PH15P25mm	15	270
1PH57P25mm	57	1009

3 PHASE, 18 mm^2		LENGTH (mm)
ORDERING NUMBER	POLES	
3PH6P18mm	6	104
3PH9P18mm	9	158
3PH12P18mm	12	214
3PH15P18mm	15	266
3PH57P18mm	57	1009

3 PHASE, 25 mm^2		LENGTH (mm)
ORDERING NUMBER	POLES	
3PH6P25mm	6	104
3PH9P25mm	9	158
3PH12P25mm	12	214
3PH15P25mm	15	266
3PH57P25mm	57	1009

Endcaps are standard with all 3 phase configurations except 57-pole.
Endcaps are not needed for the 1 phase configurations from the factory or if the copper bus is trimmed per the supplied instructions.
Power feed lugs and protective covers are extra.

Accessories

Power Feed Lug

PART NUMBER	WIRE RANGE	WIRE TYPE	TORQUE	PHASE	FUSE HOLDER
BB17	#10 - 1/0 AWG	CU	50 lb-in	Single	LPSM/LPSC/LPHV
BB18	#10 - 1/0 AWG	CU	50 lb-in	Three	LPSM/LPSC
BB19	#10 - 1/0 AWG	CU	50 lb-in	Single	LFPSM/LFPSC
BB20	#10 - 1/0 AWG	CU	50 lb-in	Three	LFPSM/LFPSC

Power Feed Lugs are 115A 1000V AC/DC rated

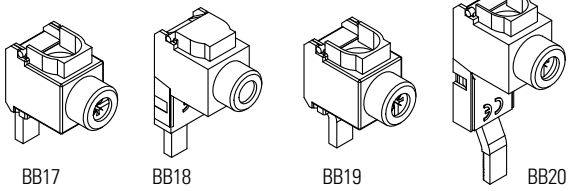

BB17 BB18 BB19 BB20

Endcaps

PART NUMBER	PHASE	QUANTITY
EDCP42	Single	50
EDCP7	Three	50

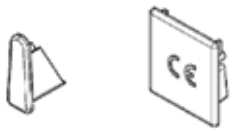

EDCP42 EDCP7

Pole Protective Covers

PART NUMBER	QUANTITY
CTPT5	5

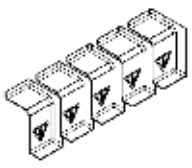

© 2023 Littelfuse, Inc.

LPSM QUICK CONNECT POWR-SAFE FUSE HOLDERS



Specifications

Voltage Rating	600 Vac/dc
Amperage Rating	30 A
Approval	UL Recognized (File No. E14721) CSA Certified (File No. LR7316) IEC 60269-2 CCC Approved
Terminal Type	1/4" Quick Connect Terminals
Fuse Type	Midget (10 X 38 mm) series
Material	Thermoplastic
Flammability Rating	UL94 V-0
SCCR Rating	Same as Fuse Rating

Ordering Information

POLES	CATALOG NUMBER	ORDERING NUMBER
1	LPSM001QCID	LPSM0001ZQCID
2	LPSM002QCID	LPSM0002ZQCID
3	LPSM003QCID	LPSM0003ZQCID
4	LPSM004QCID	LPSM0004ZQCID

2-Pole Assembly Kit Ordering No. CYHP0001Z-KIT
(Kit contains 20 connector pincers & 10 handle pins.)

Description

The LPSM midget fuse holder series is a dead front design providing protection to personnel when installing and removing fuses. The compact fuse holder mounts quickly onto 35 mm DIN rail, decreasing panel layout and assembly time. This product has two Quick Connect terminals on both the top and bottom of the holder, offering an additional connection option. It is available in 1-, 2-, 3- and 4-pole configurations.

Features/Benefits

- Dual ¼" Quick Connect Terminals on Top and Bottom of Holder
- Meets Dead Front requirements
- Mountable on 35 mm DIN Rail
- Local LED Indication

Recommended Fuses

Midget-Style (10x38mm) 30

Web Resources

Download CAD drawings and other technical information:
littelfuse.com/lpsmqc

Dimensions mm (inches)

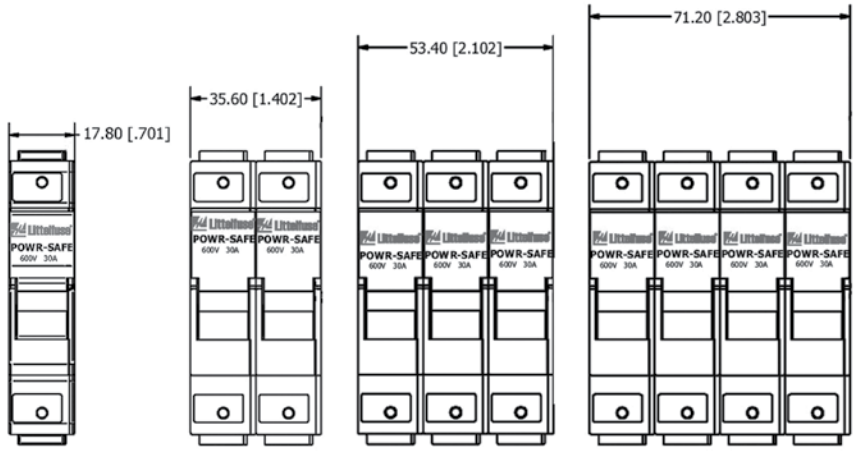

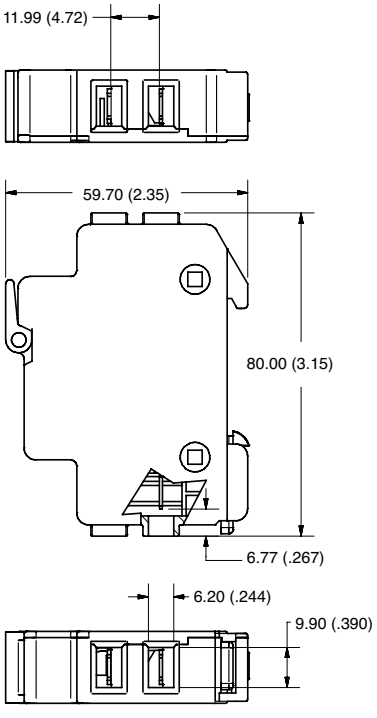

 © 2023 Littelfuse, Inc.

354 SERIES 3AG OMNI BLOCK®

Molded Base Type Fuse Block



Description

A low profile fuse block featuring individual barriers that reinforce the fuse clips while providing greater protection against clip damage and electrical shock. The unique design permits self-alignment of clips to fuse cap. This, plus a one-piece clip/terminal, assures low contact resistance.

Specifications

Dielectric Strength	1500 V Minimum
Clip/Terminals	Tin-Plated Spring Brass; two different style clips can be supplied for circuit identity or polarization
Base	Glass reinforced Thermoplastic: Gray except anit-rotation series which is black
Flammability Rating	UL94 V-0
Ambient Temperature	–40˚C to +85˚C

Dimensions Inches

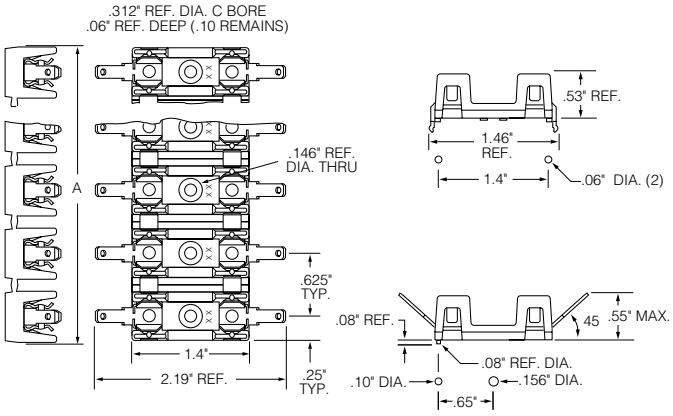

Ordering Information

CATALOG NUMBER	TERMINALS	VOLTAGE	CURRENT RATING	
			UL	CSA
354 000	Solder	600VAC/VDC*	30 A	30 A
354 600	3/16" Q.C.	600VAC/VDC	20 A	20 A
354 800	1/4" Q.C.	600VAC/VDC	20 A	20 A
354 900	1/4" Q.C.	600VAC/VDC	30 A	25 A
354 101-GY	P.C. Board	600VAC/VDC	15 A	15 A

*30 A capability is based on temperature rise with #10 AWG wire properly soldered.

Recommended Fuses

3AG Cartridge 34

Web Resources

For additional technical information visit: **littelfuse.com**

Technical Information

SOLDER TYPE TERMINALS	3/16" Q.C. TERMINALS†	1/4" Q.C. TERMINALS	1/4" Q.C. TERMINALS†	POLES	DIM "A"
354 001GY	354 601GY	354 801GY	354 901GY	1	.50"
354 002GY	354 602GY	354 802GY	354 902GY	2	1.12"
354 003GY	354 603GY	354 803GY	354 903GY	3	1.75"
354 004 GY	354 604GY	354 804GY	354 904GY	4	2.38"
354 005GY	354 605GY	354 805GY	354 905GY	5	3.00"
354 006GY	354 606GY	354 806GY	354 906GY	6	3.63"
354 007GY	354 607GY	354 807GY	354 907GY	7	4.25"
354 008GY	354 608GY	354 808GY	354 908GY	8	4.88"
354 009GY	354 609GY	354 809GY	354 909GY	9	5.50"
354 010GY	354 610GY	354 810GY	354 910GY	10	6.13"
354 011GY	354 611GY	354 811GY	354 911GY	11	6.75"
354 012GY	354 612GY	354 812GY	354 912GY	12	7.38"
354 021BL*	354 621BL*	354 821BL*	354 921BL*	1	.50"
354 101GY	—	—	—	1	.50"

† NEMA style
* With Anti-Rotation Boss

© 2023 Littelfuse, Inc.

FUSE PULLERS & POWR-JAW CLIP CLAMPS

MFP • LPFP • GFP • 097023



Features/Benefits

- Ergonomically designed fuse pullers designed to safely remove power fuses
- Molded design offers more comfortable and natural grip than traditional pullers, increasing performance

Specifications

TYPE OF FUSE PULLER	PART NUMBER	FUSE SIZE (DIAMETER)
Midget Fuse	MFP	3/16" - 1/2" fuses
Pocket Fuse	LPFP	250 V fuses from 0-200 A 600 V fuses from 0-100 A 9/16" - 1 19/32" fuses
Giant Fuse	GFP	250 V fuses from 61-600 A 600 V fuses from 61-400 A 1 1/16" - 2 19/32" fuses
Tri-puller	097023	For ATO, MINI and glass fuses

Web Resources

For additional technical information visit:
littelfuse.com/fusepullers

LCC Series POWR-JAW



Features/Benefits

- Improve contact between fuse and clip
- Help prevent unnecessary heat from poor contact due to the loss of spring force. This reduces:
  1. Nuisance fuse opening
  2. Premature aging of surrounding components
- High temperature phenolic resin knob for durability
- Wide range of coverage with simple design

Ordering Information

CATALOG NUMBER	ORDERING NUMBER	VOLTS	AMPERES
LCC1	0LCC1	250	0-30
LCC2	0LCC2	250	35-60
LCC2	0LCC2	600	0-30
LCC4	0LCC4	600	35-60
LCC5	0LCC5	250 or 600	70-100
LCC6	0LCC6	250 or 600	110-200
LCC7	0LCC7	250 or 600	225-400
LCC8	0LCC8	250 or 600	450-600

Note: POWR-JAW Clip Clamps are sold individually, not in pairs.
A minimum of 1/8" of clearance between the fuse block barrier and fuse clip is required to install Clip Clamps.

Web Resources

For additional technical information visit:
littelfuse.com/clipclamps

© 2023 Littelfuse, Inc.

LFFB SERIES LIMITER BLOCK / LHFB INLINE HOLDER

LFFB



Dimensions mm (inches)

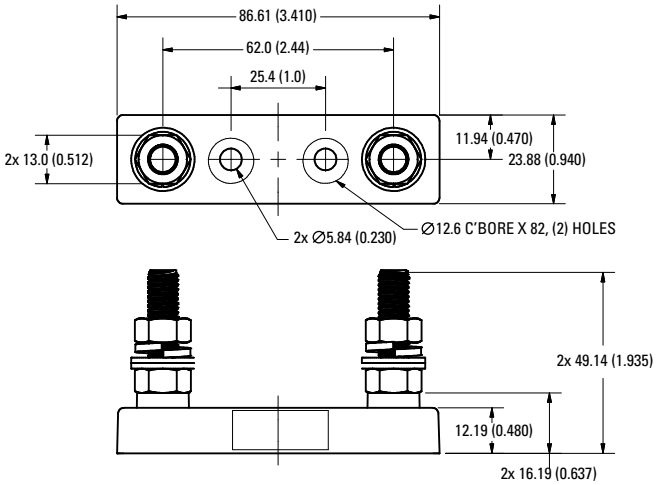

Description

The LFFB series fuse block is designed to accept bolt-down style limiter fuses. Applications include but are not limited to forklifts, golf carts and other low-voltage battery equipment. It is specifically designed for the HAZGARD™ fuse but can be used for CNN and CNL series fuses as well.

Specifications

Voltage Rating	150 Vac/Vdc
Ampere Rating	800 A
Approvals	UL Recognized (File: E14721)
Construction	Base—Thermoplastic Studs—Steel Zinc Plated

Ordering Information

CATALOG NUMBER	ORDERING NUMBER
LFFB003	LFFB0003Z

Web Resources

Sample requests and other technical information:
littelfuse.com/lffb

Recommended Fuses

CNL/CNN/CNN_E Fork Lift fuses..... 64
HAZGARD (581 series) fuse 64

LHFB



Description

The Littelfuse LHFB waterproof in-line fuse holder is ideal for harsh environments. The LHFB holder features the voltage and ampere rating molded into the body, along with a wire strip gauge. It also withstands solvents and vibration.

Features/Benefits

- Waterproof in-line fuse holder for harsh environments
- One-piece molded thermoplastic body
- Bright green color offers high visibility
- Voltage and ampere rating molded into body

Specifications

Voltage Rating	32 V
Ampere Rating	30 A
Fuses	1/4" x 1 1/4" fuses
Wire Size	Accepts #16 to #18 gauge wire
Operating Temperature	-20° C to 80° C

Installation Instructions

1. Thread wire through fuse holder body
2. Strip wire insulation per strip gauge
3. Crimp wire to fuse clip*
4. Pull wire through and seat fuse clip in the holder body
5. Insert desired fuse type and rating
6. Snap holder body together

*Recommended crimping tools: Thomas & Betts No. WT-111M
Note: Wire is not supplied with the holder.

Web Resources

Sample requests and other technical information:
littelfuse.com/lhfb

571 & 572 SERIES PANEL-MOUNT FUSE HOLDERS

571



Description

Panel mount fuse holders are for Midget-Style and Class CC fuses. Class CC fuses have a rejection feature on one end cap, which mates with the rejection feature of Littelfuse Class CC fuses holders to prevent the installation of fuses with lower voltage ratings or interrupting ratings. Watertight version must be front panel mounted.

Dimensions Inches (mm)

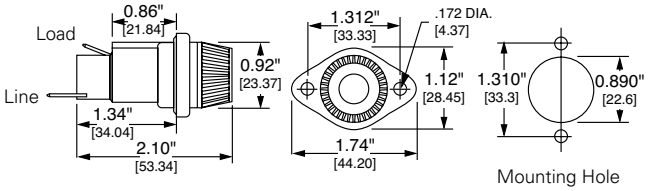

Ordering Information

STANDARD		WATERTIGHT		BOTTOM TERMINAL	FUSE LENGTH RANGE*	FOR USE WITH
CATALOG	ORDERING	CATALOG	ORDERING			
571027	05710027L	571027P	05710027LXP	Straight	1 5/16" – 1 3/8"	Midget Fuses
571028	05710028L	571028P	05710028LXP	Rt. Angle		
571007	05710007L	571007P	05710007LXP	Straight	1 13/32" – 1 1/2"	Midget Fuses
571008	05710008L	571008P	05710008LXP	Rt. Angle		
5710CC	057100CCL	5710CCP	057100CCLXP	Straight	1 1/2"	Class CC Fuses
571RCC	05710RCCL	571RCCP	05710RCCLXP	Rt. Angle		

*Fuse diameter is 13/32"
Note: Contact factory for versions with pre-assembled wire leads.

Specifications

Voltage Rating 600 V
Ampere Rating 30 A for Class CC and Midget fuses
Dielectric Strength 4000 V Minimum
Terminals Tin-plated brass combination solder & quick-connect
O-Rings 901-184 (body), 901-260 (knob)
Molded Parts Black thermoplastic
Approvals UL Recognized (File: E14721)
UL Recognized for branch circuit protection (5710CC/RCC)
CSA Certified (File: LR7316)
Flammability Rating UL94 V-0
Base Temp Rating 110 °C

Web Resources

Additional technical information: **Littelfuse.com/571**

572



Description

The 572 series panel mount fuse holders are designed to minimize installation time. Its unique design incorporates a snap-mount feature that allows the holder to be installed without any tools or mounting hardware.

Dimensions Inches (mm)

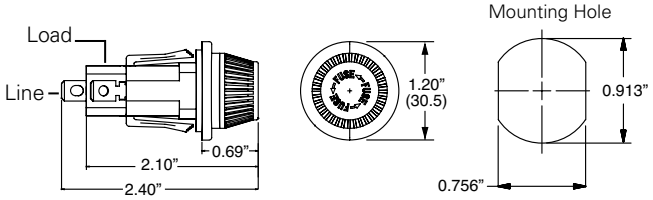

Ordering Information

STANDARD		WATERTIGHT		BOTTOM TERMINAL	FUSE LENGTH RANGE†	FOR USE WITH
CATALOG	ORDERING	CATALOG	ORDERING			
572027	05720027L	572027P	05720027LXP	Straight	1 5/16" – 1 3/8"	Midget Fuses
572028	05720028L	572028P	05720028LXP	Rt. Angle		
572007	05720007L	572007P	05720007LXP	Straight	1 13/32" – 1 1/2"	Midget Fuses
572008	05720008L	572008P	05720008LXP	Rt. Angle		
5720CC	057200CCL	5720CCP	057200CCLXP	Straight	1 1/2"	Class CC Fuses
572RCC	05720RCCL	572RCCP	05720RCCLXP	Rt. Angle		

†Fuse diameter is 13/32"
Note: Contact factory for versions with pre-assembled wire leads.

Specifications

Voltage Rating 600 V
Ampere Rating 30 A for Class CC and Midget fuses
Dielectric Strength 4000 V Minimum
Terminals Tin-plated brass combination solder & quick-connect
Molded Parts Black thermoplastic
Approvals UL Recognized (File: E14721)
UL Recognized for branch circuit protection (5720CC/RCC) Class CC version
CSA Certified (File: LR7316)
Mounting Double "D" punch - Greenlee #61092
(14-18 gauge panel thickness recommended)
Flammability Rating UL94 V-0
Base Temp Rating 110 °C

Web Resources

Additional technical information:**Littelfuse.com/572**

© 2023 Littelfuse, Inc.

342 SERIES 3AG (¼" X 1¼") PANEL MOUNT FUSE HOLDERS

Traditional Panel Mount Type



Straight Terminal
Knurled Knob



Right Angle
Terminal
Fluted Knob

Description

Panel Mount Fuse holders for 3AG (¼" x 1¼") fuses. Both fluted and knurled knob terminal options are available.

Ordering Information

Straight Terminal

FLUTED KNOB		KNURLED KNOB		TERMINAL
CATALOG/ORDERING NUMBER		CATALOG/ORDERING NUMBER		
342014A	03420014X	342012A	03420012X	Solder
342038A	03420038X	342058A	03420058X	3/16" Q.C.
342838A	03420838X	342858A	03420858X	¼" Q.C.

Right Angle Terminal

FLUTED KNOB		KNURLED KNOB		TERMINAL
CATALOG/ORDERING NUMBER		CATALOG/ORDERING NUMBER		
342004	03420004X	342022A	03420022X	Solder
342028A	03420028X	342048A	03420048X	3/16" Q.C.
342828	03420828X	342848A	03420848X	¼" Q.C.

Straight Terminal

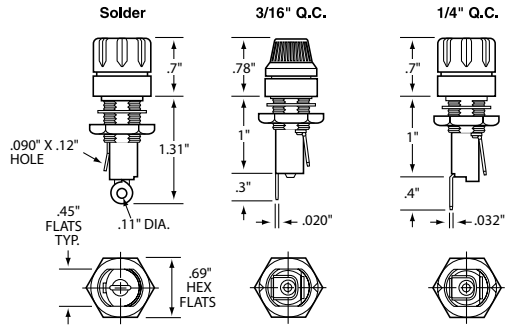

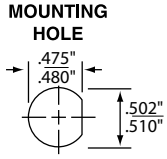

Right Angle Terminal

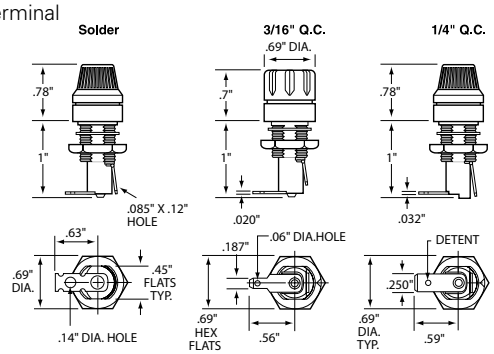

Dimensions in inches

Specifications

Electrical	Rated at 20 A for any voltage up to 250 V
Dielectric Strength	2400 V minimum
Mounting	Withstands 15 lb-in mounting torque; maximum panel thickness .187"
Molded Parts	Black thermoplastic (UL94 V-0)
Knob	Bayonet style with lettering
Terminals	Copper & copper alloy. Tin plated, except ¼" Quick-Connect terminals are nickel plated
Ambient Temperature	–40˚C to +85˚C

Recommended Fuses

3AG Cartridge 34

Web Resources

Additional technical information available at:
littelfuse.com/342

342 Series (Watertight Panel Mount Type)



Dimensions Inches

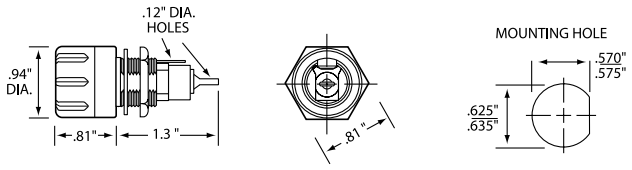

Specifications

Electrical	Rated at 20 A for any voltage up to 250 V
Dielectric Strength	1500 V minimum
Mounting	Withstands 15 lb-in mounting torque; maximum panel thickness is .250"
Molded Parts	Black thermoset (UL94 V-0)
Knob	Screw type
Seal	O-ring provides a watertight seal on the front side of the panel per MIL-PRF-19207
Terminals	Copper & copper alloy. Tin plated. Solder type
Ambient Temperature	–40˚C to +85˚C
Hardware	O-rings (2) and hex nut, unassembled

Ordering Information

CATALOG NUMBER	ORDERING NUMBER
342006A	0342006ZXA

Recommended Fuses

3AG Cartridge 34

Web Resources

Additional technical information available at: **littelfuse.com/342**

© 2023 Littelfuse, Inc.

345 SERIES PANEL MOUNT FUSE HOLDERS

International Shock-Safe Panel Mount Type

Description

Designed to eliminate electrical shock as defined by IEC Standards 60065 and 60127, these panel-mount fuses holders offer a wide variety of options. This allows for inventory reduction and versatility.



Features/Benefits

- Anti-tease feature eliminates circuit interruption when knob is accidentally depressed
- Five fuse holder types for maximum flexibility
- Two knob styles—screwdriver slot and fingergrip
- Drip proof option available on screwdriver slot knob style
- Two terminal choices depending on application

Web Resources

For more informations, visit:
littelfuse.com/shocksafe

Recommended Fuses

Glass / Electronic Fuses..... 33

Specifications

Insulation Resistance	10,000 megaohm minimum at 500 Vdc
Contact Resistance	Less than .005 ohm average at currents up to 1 A
Mounting	Threaded styles withstand 15 in-lb mounting torque Profile panel thickness .032" min/310" max. Quick mount panel thickness .012" min/360" max. Rear mount panel thickness.012" min/260" max.
Body Material	Black glass-filled thermoplastic (UL94 V-0)
Knob Material	Grey, blue or black glass-filled thermoplastic (UL94 V-0)
Hex Nut Material	Black glass-filled thermoplastic
Knob	Finger-Grip, Fuse Extractor type or Screwdriver Slot, Fuse Extractor type with plated copper alloy insert Plated copper alloy contact clips. Spring loaded, locking mechanism provides an anti-tease feature and will not vibrate loose
Terminals	Copper alloy, Tin-plated
Ambient Temperature	–40˚C to +85˚C
Hardware	Threaded style fuse holders are supplied with a thermoplastic hex nut unassembled Quick mount style fuse holders are supplied with a push-on type retaining nut, black oxide finish, unassembled A synthetic rubber O-ring will be supplied only with the screwdriver slot knob when the drip-proof version is requested

AGENCY APPROVAL	FILE NUMBER	3AG	5 X 20 mm	2AG
UL	E75961	20 A 250 V	10 A 250 V	10 A 250 V
CSA	LR91788	20 A 250 V	10 A 250 V	10 A 250 V
VDE	116895E	10 A 250 V	10 A 250 V	—

Note: To order with a metal internal tooth lockwasher (L) and/or neoprene panel washer (N) and/or drip-proof synthetic rubber "O" ring with Neoprene washer (NP) [Screwdriver slot knob only], add the appropriate suffix (L, N, or NP) respectively.

Please refer to Technical Application Guide section for information on proper fuse holder de-rating.

Ordering Information

EXAMPLE:
(Complete Assembly with Options)

Series Number 345 3 LS 7 LNP

FUSE SIZE	STYLE	TERMINALS	OPTIONS*
2	LF	1	L
2AG .177" x .570"	Low Profile Body Black Fingergrip Knob	3/16" (Right Angle) Dual Purpose Solder/QC	Lockwasher
3	RF	2	N
3AG .250" x 1.250"	Rear Mount Body Black Fingergrip Knob	3/16" (Straight) Dual Purpose Solder/QC	Neoprene Washer
5	HS	3	NP
5 x 20 mm .197" X .787"	High Profile Body Screwdriver Slot Knob	3/16" (Right Angle) NEMA QC	Drip-Proof O-Ring† with Neoprene Washer
	LS	4	
	Low Profile Body Screwdriver Slot Knob	3/16" (Straight) NEMA QC	
	QS	7	
	Quick Mount Body Screwdriver Slot Knob	1/4" (Right Angle) NEMA/DIN QC	
	Screwdriver Slot Knob 2AG–Blue Knob 3AG–Grey Knob 5 x 20 mm–Black Knob	8	
		1/4" (Straight) NEMA/DIN QC	

*Options (L, N, NP) can be ordered individually or in combination.
†Screwdriver slot knob only.

 © 2023 Littelfuse, Inc.

LSCR SERIES HIGH-SPEED FUSE BLOCKS

700 V • 1000 V • 1500 V



Description

Littelfuse LSCR series is a comprehensive line of modular fuse blocks, designed to accommodate a wide range of high-speed and UL power fuses. These LSCR series blocks have a modular stud-type design that enables easy mounting in panel boards.

Features/Benefits

- Modular design reduces inventory requirements
- Sold in pairs for convenience
- Supplied with nut and belleville washer

Specifications

Voltage Rating	700 V / 1000 V / 1500 V
Ampere Rating	400 A, 800 A and 1200 A
Withstand Rating	200 kA / 250 kA
Approvals	UL Recognized (File: E14721) cURus Recognized (E14721) CSA Certified (File: 73160)
Material Base	Molded phenolic or thermoplastic
Terminal Construction	Steel, zinc-plated
Flammability Rating	UL 94 V-0
Environmental	RoHS compliant
Country of Origin	LSCR0xx - China LSCR1xx - USA

Web Resources

For more information, visit: **Littelfuse.com/LSCR**

Electrical & Mechanical Specifications

CATALOG/ ORDERING NUMBER	AMPERE RATING	VOLTAGE RATING		INTERRUPTING RATING		INSULATOR		SUGGESTED STUD TORQUE		MOUNTING FASTNER SIZE	SUGGESTED FASTENER TORQUE		AGENCY APPROVALS		
		AC	DC	AC	DC	MATERIAL	MAX. BASE TEMPERATURE	(in.lbs)	(N•m)		(in.lbs)	(N•m)	UR	cURus	CSA
LSCR001	400 A	700 V	1500 V	200 kA	250 kA	Molded Phenolic	150 °C (302 °F)	61	6.8	#10	20–25	2.3–2.8	•		•
LSCR002	800 A	700 V	1500 V	200 kA	250 kA	Molded Phenolic	150 °C (302 °F)	192	21.6	#10	20–25	2.3–2.8	•		•
LSCR101	400 A	1000 V	1000 V	200 kA	200 kA	Thermoplastic	125 °C (257 °F)	67.5–82.5	7.6–9.3	#10	12 max	1.3 max		•	
LSCR102	800 A	1000 V	1000 V	200 kA	200 kA	Thermoplastic	125 °C (257 °F)	207–253	23.4–28.6	#10	12 max	1.3 max		•	
LSCR103	1200 A	1000 V	1000 V	200 kA	200 kA	Thermoplastic	125 °C (257 °F)	270–330	30.5–37.3	¼"	12 max	1.3 max		•	

© 2023 Littelfuse, Inc.

LSCR SERIES HIGH-SPEED FUSE BLOCKS

Dimensions mm (inches)

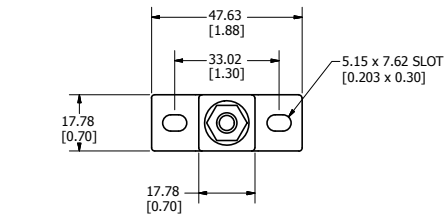

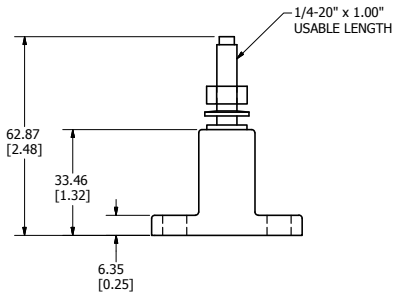

LSCR001

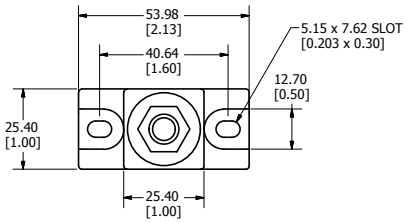

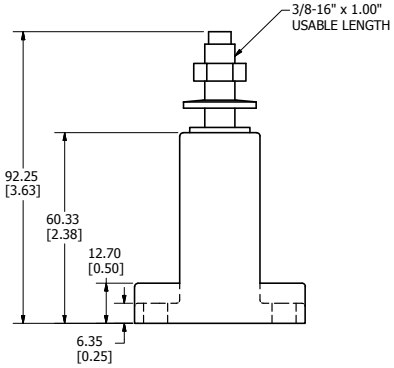

LSCR002

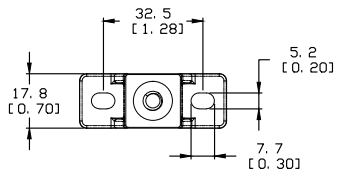

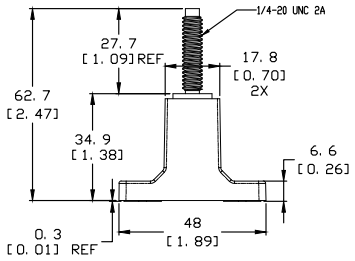

LSCR101

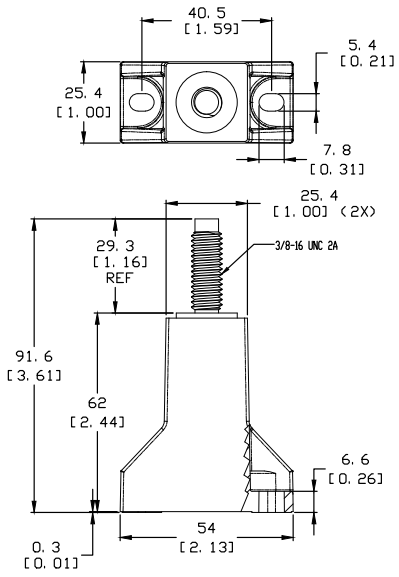

LSCR102

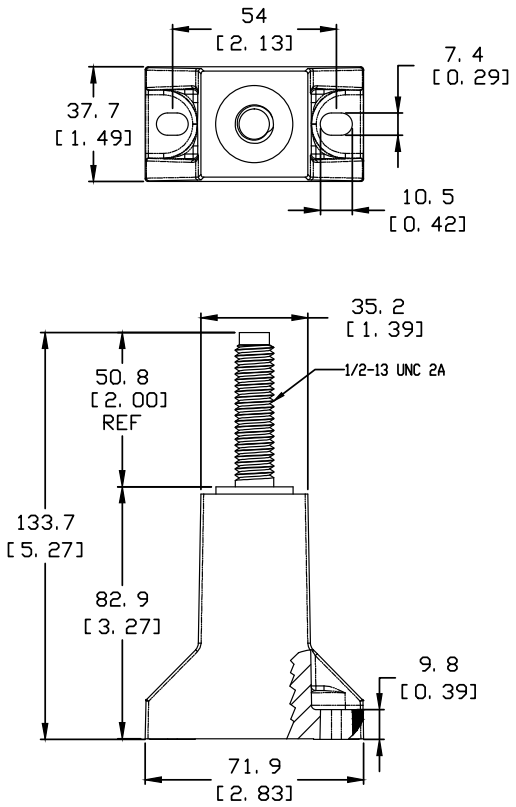

LSCR103

© 2023 Littelfuse, Inc.

LSCR SERIES HIGH-SPEED FUSE BLOCKS

High-Speed Fuse Block Selection Guide

FUSE SERIES	CATALOG NUMBER	LSCR001	LSCR002	LSCR101	LSCR102	LSCR103
	TERMINAL SIZE	1/4–20 UNC	3/8–16 UNC	1/4–20 UNC	3/8–16 UNC	1/2–13 UNC
	VOLTAGE RATING	700 V ac/1500 V dc	700 V ac/1500 V dc	1000 V ac/dc	1000 V ac/dc	1000 V ac/dc
	AMPERE RATING	400 A	800 A	400 A	800 A	1200 A
L15S	70–400	X		X		
	500–800		X		X	
L17T	70–250	X		X		
	300–800		X		X	
L25S	35–200	X		X		
	225–800		X		X	
L50S	35–200	X		X		
	225–800		X		X	
	700–800					X
L50QS	35–200	X		X		
	225–800		X		X	
	700–800					X
L60S	35–200	X		X		
	225–800		X		X	
	700–800					X
KLC	35–60	X		X		
	70–800		X		X	
	225–800					X
L70S	35–100	X		X		
	125–800		X		X	
	450–800					X
L70QS	35–100	X		X		
	125–800		X		X	
	450–800					X
JLLN	70–200	X		X		
	225–800		X		X	
	700–1200					X
JLLS	70–200	X		X		
	225–800		X		X	
	700–1200					X
JLS	70–100	X		X		
	110–200	X		X		
	225–400		X		X	
	450–600		X		X	
SPFJ	70–100	X		X		
	125–200	X		X		
	250–400		X		X	
	450					X
L75QS	35–100	X		X		
	125–800		X		X	
	450–800					X

© 2023 Littelfuse, Inc.

High-Speed Fuse Block Selection Guide

FUSE SERIES	CATALOG NUMBER	LSCR001	LSCR002	LSCR101	LSCR102	LSCR103
	TERMINAL SIZE	1/4–20 UNC	3/8–16 UNC	1/4–20 UNC	3/8–16 UNC	1/2–13 UNC
	VOLTAGE RATING	700 V ac/1500 V dc	700 V ac/1500 V dc	1000 V ac/dc	1000 V ac/dc	1000 V ac/dc
	AMPERE RATING	400 A	800 A	400 A	800 A	1200 A
ESR1XLDB	125		X			
ESR1XLUB	125					X
EV1K	60–125	X				
EV1K	150–600		X			
PSR030DL	40–550		X			
PSR030DS	40–550		X			
PSR030UL	40–550		X			
PSR030US	40–550		X			
PSR031DL	200–800		X			
PSR031DS	200–800		X			
PSR031UL	200–800					X
PSR031US	200–800					X
PSR032DL	400–800		X			
PSR032DS	400–800		X			
PSR032UL	400–1100					X
PSR032US	400–1100					X
PSR033DL	450–800		X			
PSR033DS	450–800		X			
PSR070DL	50–315				X	
PSR070UL	50–315		X			
PSR071DL	160–450				X	
PSR071UL	160–450					X
PSR072DL	250–630				X	
PSR072UL	250–630					X
PSR073DL	315–700				X	
PSX1XLDB	80–700		X			
PSX1XLUB	80–700					X
PSX3XLDB	450–630		X			

© 2023 Littelfuse, Inc.

1LFS SERIES HIGH-SPEED FUSE BLOCKS

600V • 1-400 A



Specifications

Voltage Rating	600 V
Ampere Range	1 – 400 A
Approvals	UL Recognized E14721
Material	**Base:** 150˚ C general purpose phenolic **Terminal:** Tin plated aluminum

Web Resources

Download CAD drawings and other technical information:
littelfuse.com/1lfs

Description

Littelfuse modular style high-speed semiconductor fuse blocks accommodate a wide range of semiconductor fuses. Blocks are provided in pairs with fuse mounting hardware.

Features/Benefits

- Modular design reduces inventory requirements
- Sold in pairs for convenience
- Constructed of general purpose phenolic (with tin plated aluminum terminations)

Ordering Information

CATALOG NUMBER	AMPERE RATING	WIRE RANGE	WIRE RATING	APPROVALS
1LFS101	100 A	#2/0 - 14 CU/AL	120 in-lbs	UL Recognized
1LFS102	400 A	250MCM - #6 CU/AL	275 in-lbs	UL Recognized

Recommended Fuses

1LFS101

FUSE SERIES	AMPERE RATINGS
L15S	70-100
L25S	35-100
L50S	35-100
L60S	35-100
KLC	1-100

1LFS102

FUSE SERIES	AMPERE RATINGS
L15S	70-400
L25S	70-200
L50S	125-200
L60S	125-200

Dimensions Inches (mm)

1LFS101

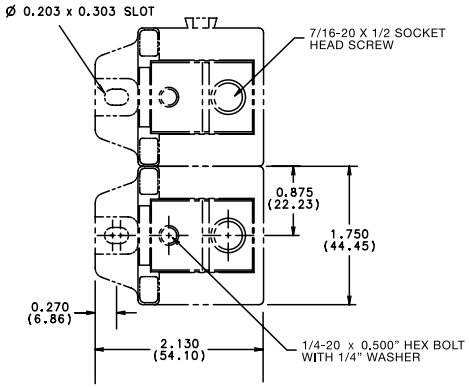

1LFS102

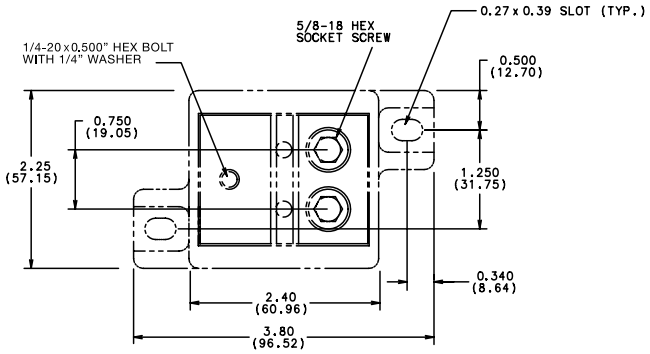

POWR-BLOKS

Distribution Blocks • Splicer Blocks • Covers



Description

POWR-BLOKS power distribution blocks offer a safe, convenient way of splicing cables, providing a fixed junction tap-off point or splitting primary power into secondary circuits. Lx2xxx-DIN series offers integral DIN-rail mount and an optional hinged safety cover.

Optional power distribution block covers provide protection against accidental shorting between poles caused by loose wires, tools, or other conductive material. They also protect personnel from accidentally contacting energized connectors.

Applications

Typical applications include heating, air conditioning and refrigeration systems, elevator systems, material handling equipment, control panels, motor controls, switchgear, and anywhere power needs to be distributed to more than one load.

Connectors

Box lug connectors are designed for use with a single or multiple, solid or class B or C stranded conductor. For UL approved use of more than one conductor per connector opening, contact Littelfuse Technical Service at 1-800-TEC-FUSE or techline@littelfuse.com.

Ampere Ratings

The ampere rating per pole for power distribution blocks is based on the line ampacity of 75 °C insulated conductors per NEC Table 310.16. If 60 °C insulated conductors are used, load must not exceed the ampacity of 60 °C conductors. Use of conductors rated in excess of 75 °C is permitted (for example 90 °C), however, load must not exceed the ampacity of 75 °C conductors.

Specifications

Voltage Rating	600 V
Current Rating	Based on NEC Table 310.16, using 75 °C copper wire
SCCR	Consult Factory
Material	Phenolic rated at 150 °C and Thermoplastic rated at 125 °C (LD1400 and LS1300 series only)
Connector	Aluminum: Highly conductive aluminum, tin plated Copper: Highly conductive copper, tin plated
Flammability Rating	UL94 V-0
Approvals	UL Recognized - 0LD/0LS Series (File: E171395) LFD/LFS Series (File: E309688) CSA Certified - 0LD/0LS Series (File: LR700111) LFD/LFS Series (File: 007316_0_000) UL Listed - 0LD57xxxx (File: E482231)
Environmental	RoHS compliant, Lead (Pb) free

Ordering Information

See Selection Guide on next page

Web Resources

For dimension, CAD and 3-D drawings, visit:
Littelfuse.com/powrbloks

Hinged Plastic Covers



Clear Plastic Covers



© 2023 Littelfuse, Inc.

POWR-BLOKS

Distribution Block Selection Guide

AMP PER POLE	POLES	CONNECTOR MATERIAL	LINE CONNECTION					LOAD CONNECTION					FIGURE	CATALOG/ ORDERING NUMBER	*PLASTIC COVER ORDERING NUMBER
			CONNECTOR IMAGE	OPENINGS PER POLE	LUG TYPE	WIRE RANGE	TORQUE RANGE	CONNECTOR IMAGE	OPENINGS PER POLE	LUG TYPE	WIRE RANGE	TORQUE RANGE			
115	1	AL		1	Slotted	#2 - #14	35-50 in-lbs		4	Slotted	#10 - #18	7 in-lbs	10	0LD14401Z	LPBC1441
115	2			1	Slotted	#2 - #14	35-50 in-lbs		4	Slotted	#10 - #18	7 in-lbs	10	0LD14402Z	LPBC1442
115	3			1	5/32" Hex	#2 - #14	50-40 in-lbs		4	5/64" Hex	#10 - #18	7 in-lbs	2	LFD14003Z	LPBC13
115	4			1	Slotted	#2 - #14	35-50 in-lbs		4	Slotted	#10 - #18	7 in-lbs	10	0LD14404Z	LPBC1444
175	1	AL		1	5/16" Hex	2/0 - #14	35-120 in-lbs		4	Slotted	#4 - #14	35 in-lbs	3	0LD25701Z	LPBC21
175	2			1	3/16" Hex	2/0 - #14	40-120 in-lbs		4	1/8" Hex	#4 - #14	35 in-lbs	3	LFD25702Z	LPBC22
175	3			1	3/16" Hex	2/0 - #14	40-120 in-lbs		4	1/8" Hex	#4 - #14	35 in-lbs	3	LFD25703Z	LPBC23
175	1	AL		1	3/16" Hex	2/0 - #14	35-120 in-lbs		4	1/8" Hex	#4 - #14	35 in-lbs	4	0LD25701ZXDIN	0LCH1321Z
175	2			1	3/16" Hex	2/0 - #14	35-120 in-lbs		4	1/8" Hex	#4 - #14	35 in-lbs	4	0LD25702ZXDIN	0LCH1322Z
175	3			1	3/16" Hex	2/0 - #14	35-120 in-lbs		4	1/8" Hex	#4 - #14	35 in-lbs	4	0LD25703ZXDIN	0LCH1323Z
175	Adder			1	–	2/0 - #14	35-120 in-lbs		4	–	#4 - #14	35 in-lbs	4	0LD2570AZXDIN	-
175	1	CU		1	3/16" Hex	2/0 - #14	35-120 in-lbs		4	Slotted	#4 - #14	35 in-lbs	3	0LD29701Z	LPBC21
175	2			1	3/16" Hex	2/0 - #14	35-120 in-lbs		4	Slotted	#4 - #14	35 in-lbs	3	0LD29702Z	LPBC22
175	3			1	3/16" Hex	2/0 - #14	35-120 in-lbs		4	Slotted	#4 - #14	35 in-lbs	3	0LD29703Z	LPBC23
175	1	CU		1	3/16" Hex	2/0 - #14	35-120 in-lbs		4	Slotted	#4 - #14	35 in-lbs	4	0LD29701ZXDIN	0LCH1321Z
175	2			1	3/16" Hex	2/0 - #14	35-120 in-lbs		4	Slotted	#4 - #14	35 in-lbs	4	0LD29702ZXDIN	0LCH1322Z
175	3			1	3/16" Hex	2/0 - #14	35-120 in-lbs		4	Slotted	#4 - #14	35 in-lbs	4	0LD29703ZXDIN	0LCH1323Z
175	Adder			1	–	2/0 - #14	35-120 in-lbs		4	–	#4 - #14	35 in-lbs	4	0LD2970AZXDIN	-
175	2	AL		1	5/16" Hex	2/0 - #14	35-120 in-lbs		4	Slotted	#4 - #14	35 in-lbs	1	0LD04022Z	LPBC02
175	3			1	5/16" Hex	2/0 - #14	35-120 in-lbs		4	Slotted	#4 - #14	35 in-lbs	1	0LD04023Z	LPBC03
175	2	AL		1	5/16" Hex	2/0 - #14	35-120 in-lbs		6	Slotted	#4 - #14	35 in-lbs	1	0LD04012Z	LPBC02
175	3			1	3/16" Hex	2/0 - #14	40-120 in-lbs		6	1/8" Hex	#4 - #14	35 in-lbs	1	LFD04013Z	LPBC03
175	1	AL		1	5/16" Hex	2/0 - #14	35-120 in-lbs		6	1/8" Hex	#4 - #14	35 in-lbs	4	0LD25801ZXDIN	0LCH1321Z
175	2			1	5/16" Hex	2/0 - #14	35-120 in-lbs		6	1/8" Hex	#4 - #14	35 in-lbs	4	0LD25802ZXDIN	0LCH1322Z
175	3			1	5/16" Hex	2/0 - #14	35-120 in-lbs		6	1/8" Hex	#4 - #14	35 in-lbs	4	0LD25803ZXDIN	0LCH1323Z
175	Adder			1	5/16" Hex	2/0 - #14	35-120 in-lbs		6	1/8" Hex	#4 - #14	35 in-lbs	4	0LD2580AZXDIN	-
310	3	AL		1	5/16" Hex	350kcmil - #6	40-120 in-lbs		2	3/16" Hex	2/0 - #14	35-120 in-lbs	9	0LD335543Z	0LCH1333Z
310	2	AL		1	5/16" Hex	350kcmil - #6	275 in-lbs		6	Slotted	#4 - #14	35 in-lbs	1	0LD04042Z	LPBC02
310	3			1	5/16" Hex	350kcmil - #6	275 in-lbs		6	Slotted	#4 - #14	35 in-lbs	1	0LD04043Z	LPBC03
335	1	AL		1	5/16" Hex	400kcmil - #6	275 in-lbs		4	Slotted	#2 - #14	35-50 in-lbs	5	0LD35521Z	LPBC31
335	2			1	5/16" Hex	400kcmil - #6	275 in-lbs		4	Slotted	#2 - #14	35-50 in-lbs	5	0LD35522Z	LPBC32
380	3			1	3/8" Hex	500kcmil - #6	375 in-lbs		4	5/32" Hex	#2 - #14	35-50 in-lbs	5	LFD35523Z	LPBC33
335	1	AL		1	5/16" Hex	400kcmil - #6	275 in-lbs		6	Slotted	#2 - #14	35-50 in-lbs	5	0LD35531Z	LPBC31
335	2			1	5/16" Hex	400kcmil - #6	275 in-lbs		6	Slotted	#2 - #14	35-50 in-lbs	5	0LD35532Z	LPBC32
380	3			1	3/8" Hex	500kcmil - #6	375 in-lbs		6	5/32" Hex	#2 - #14	40-50 in-lbs	5	LFD35533Z	LPBC33
335	1	AL		1	Slotted	400kcmil - #6	275 in-lbs		8	Slotted	#2 - #14	35-50 in-lbs	6	0LD45601Z	LPBC41
335	2			1	Slotted	400kcmil - #6	275 in-lbs		8	Slotted	#2 - #14	35-50 in-lbs	6	0LD45602Z	LPBC42
335	3			1	Slotted	400kcmil - #6	275 in-lbs		8	Slotted	#2 - #14	35-50 in-lbs	6	0LD45603Z	LPBC43
350	1	AL		2	3/16" Hex	2/0 - #14	35-120 in-lbs		6	Slotted	#4 - #14	35 in-lbs	5	0LD35551Z	LPBC31
350	2			2	3w/16" Hex	2/0 - #14	35-120 in-lbs		6	Slotted	#4 - #14	35 in-lbs	5	0LD35552Z	LPBC32
350	3			2	3/16" Hex	2/0- #14	40-120 in-lbs		6	1/8" Hex	#4 - #14	35 in-lbs	5	LFD35553Z	LPBC33
350	1	CU		2	Slotted	2/0 - #14	35-120 in-lbs		6	1/8" Hex	#4 - #14	35 in-lbs	5	0LD39551Z	LPBC31
350	2			2	Slotted	2/0 - #14	35-120 in-lbs		6	1/8" Hex	#4 - #14	35 in-lbs	5	0LD39552Z	LPBC32
350	3			2	Slotted	2/0 - #14	35-120 in-lbs		6	1/8" Hex	#4 - #14	35 in-lbs	5	0LD39553Z	LPBC33
380	1	CU		1	Slotted	500kcmil - #6	375 in-lbs		6	5/32" Hex	#2 - #14	35-50 in-lbs	5	0LD39531Z	LPBC31
380	2			1	Slotted	500kcmil - #6	375 in-lbs		6	5/32" Hex	#2 - #14	35-50 in-lbs	5	0LD39532Z	LPBC32
380	3			1	Slotted	500kcmil - #6	375 in-lbs		6	5/32" Hex	#2 - #14	35-50 in-lbs	5	0LD39533Z	LPBC33
380	1	AL		1	Slotted	500kcmil - #4	375 in-lbs		6	Slotted	#2 - #14	35-50 in-lbs	6	0LD45511Z	LPBC41
380	2			1	Slotted	500kcmil - #4	375 in-lbs		6	Slotted	#2 - #14	35-50 in-lbs	6	0LD45512Z	LPBC42
380	3			1	Slotted	500kcmil - #4	375 in-lbs		6	Slotted	#2 - #14	35-50 in-lbs	6	0LD45513Z	LPBC43
380	1	AL		1	3/8" Hex	500kcmil - #4	375 in-lbs		6	5/16" Hex	2/0 - #14	35-120 in-lbs	7	0LD55791Z	LPBC51
380	2			1	3/8" Hex	500kcmil - #4	375 in-lbs		6	5/16" Hex	2/0 - #14	35-120 in-lbs	7	0LD55792Z	LPBC52
380	3			1	3/8" Hex	500kcmil - #4	375 in-lbs		6	5/16" Hex	2/0 - #14	40-120 in-lbs	7	LFD55793Z	LPBC53

*Note: AL = Aluminum / CU = Copper *Covers sold separately*

© 2023 Littelfuse, Inc.

POWR-BLOKS

Distribution Block Selection Guide

AMP PER POLE	POLES	CONNECTOR MATERIAL	LINE CONNECTION					LOAD CONNECTION					FIGURE	CATALOG/ ORDERING NUMBER	*PLASTIC COVER ORDERING NUMBER
			CONNECTOR IMAGE	OPENINGS PER POLE	LUG TYPE	WIRE RANGE	TORQUE RANGE	CONNECTOR IMAGE	OPENINGS PER POLE	LUG TYPE	WIRE RANGE	TORQUE RANGE			
380	1	AL		1	3/8" Hex	500kcmil- #4	375 in-lbs		8	5/32" Hex	#2 - #14	35-50 in-lbs	7	0LD55941Z	LPBC51
380	2			1	3/8" Hex	500kcmil- #4	375 in-lbs		8	5/32" Hex	#2 - #14	35-50 in-lbs	7	0LD55942Z	LPBC52
380	3			1	3/8" Hex	500kcmil- #4	375 in-lbs		8	5/32" Hex	#2 - #14	35-50 in-lbs	7	0LD55943Z	LPBC53
380	1	AL		1	Slotted	500kcmil - #4	375 in-lbs		12	Slotted	#2 - #14	35-50 in-lbs	7	0LD55521Z	LPBC51
380	2			1	Slotted	500kcmil - #4	375 in-lbs		12	Slotted	#2 - #14	35-50 in-lbs	7	0LD55522Z	LPBC52
380	3			1	3/8" Hex	500kcmil - #4	375 in-lbs		12	5/32" Hex	#2 - #14	40-50 in-lbs	7	LFD55523Z	LPBC53
420	1	AL		1	1/2" Hex	600kcmil- #2	375 in-lbs		3	3/16" Hex	1/0 - #14	35-120 in-lbs	9	0LD35881Z	0LCH1331Z
									6	5/32" Hex	#2 - #14	35-50 in-lbs			
420	3	AL		1	1/2" Hex	600kcmil- #2	375 in-lbs		3	3/16" Hex	1/0 - #14	35-120 in-lbs	9	0LD35883Z	0LCH1333Z
									6	5/32" Hex	#2 - #14	35-50 in-lbs			
420	1	AL		1	1/2" Hex	600kcmil- #2	375 in-lbs		12	1/8" Hex	#4 - #14	35 in-lbs	9	0LD35951Z	0LCH1331Z
420	2			1	1/2" Hex	600kcmil- #2	375 in-lbs		12	1/8" Hex	#4 - #14	35 in-lbs	9	0LD35952Z	0LCH1332Z
510	1	AL		2	5/16" Hex	250kcmil - #6	275 in-lbs		12	1/8" Hex	#4 - #14	35 in-lbs	9	0LD35961Z	0LCH1331Z
510	2			2	5/16" Hex	250kcmil - #6	275 in-lbs		12	1/8" Hex	#4 - #14	35 in-lbs	9	0LD35962Z	0LCH1332Z
510	3			2	5/16" Hex	250kcmil - #6	275 in-lbs		12	1/8" Hex	#4 - #14	35 in-lbs	9	0LD35963Z	0LCH1333Z
760	1	AL		2	3/8" Hex	500kcmil - #6	375 in-lbs		8	5/16" Hex	2/0 - #14	35-120 in-lbs	7	0LD55861Z	LPBC51
760	2			2	3/8" Hex	500kcmil - #6	375 in-lbs		8	5/16" Hex	2/0 - #14	35-120 in-lbs	7	0LD55862Z	LPBC52
760	3			2	3/8" Hex	500kcmil - #4	375 in-lbs		8	3/16" Hex	2/0 - #14	40-120 in-lbs	7	LFD55863Z	LPBC53
760	1	CU		2	3/8" Hex	500kcmil- #4	375 in-lbs		8	3/16" Hex	2/0 - #14	35-120 in-lbs	7	0LD59861Z	LPBC51
760	2			2	3/8" Hex	500kcmil- #4	375 in-lbs		8	3/16" Hex	2/0 - #14	35-120 in-lbs	7	0LD59862Z	LPBC52
760	3			2	3/8" Hex	500kcmil- #4	375 in-lbs		8	3/16" Hex	2/0 - #14	35-120 in-lbs	7	0LD59863Z	LPBC53
760	1	AL		2	3/8" Hex	500kcmil- #6	375 in-lbs		12	Slotted	#4 - #14	35 in-lbs	7	0LD55921Z	LPBC51
760	2			2	3/8" Hex	500kcmil- #6	375 in-lbs		12	Slotted	#4 - #14	35 in-lbs	7	0LD55922Z	LPBC52
760	3			2	3/8" Hex	500kcmil- #4	375 in-lbs		12	1/8" Hex	#4 - #14	35 in-lbs	7	LFD55923Z	LPBC53
760	1	CU		2	3/8" Hex	500kcmil- #6	375 in-lbs		12	Slotted	#2 - #14	35-50 in-lbs	7	0LD59921Z	LPBC51
760	2			2	3/8" Hex	500kcmil- #6	375 in-lbs		12	Slotted	#2 - #14	35-50 in-lbs	7	0LD59922Z	LPBC52
760	3			2	3/8" Hex	500kcmil- #6	375 in-lbs		12	Slotted	#2 - #14	35-50 in-lbs	7	0LD59923Z	LPBC53
760	3	AL		2	1/2" Hex	500kcmil - #4	375 in-lbs		12	5/16" Hex	#2 - #14	35-50 in-lbs	7	0LD54083Z	LPBC53
840	3	AL		2	1/2" Hex	600kcmil- #2	375 in-lbs		4	5/16" Hex	3/0 - #6	120 in-lbs	7	0LD54113Z	LPBC53
									4	5/16" Hex	#4 - #14	35 in-lbs			
950	1	AL		2	9/16" Hex	750kcmil - 1/0	600 in-lbs		10	3/16" Hex	2/0 - #14	50-120 in-lbs	8	0LD57041Z	0LCH1351Z
950	3	AL		2	9/16" Hex	750kcmil - 1/0	600 in-lbs		10	3/16" Hex	2/0 - #14	50-120 in-lbs	8	0LD57043Z	0LCH1351Z
950	1	AL		2	9/16" Hex	750kcmil - 1/0	600 in-lbs		3	5/16" Hex	250kcmil - #6	275 in-lbs	8	0LD57051Z	0LCH1351Z
									12	5/32" Hex	#2 - #14	40-50 in-lbs			
950	3	AL		2	9/16" Hex	750kcmil - 1/0	600 in-lbs		3	5/16" Hex	250kcmil - #6	275 in-lbs	8	0LD57053Z	0LCH1351Z
									12	5/32" Hex	#2 - #14	40-50 in-lbs			
950	1	AL		2	9/16" Hex	750kcmil - 1/0	600 in-lbs	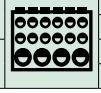	4	1/4" Hex	3/0 - #6	180 in-lbs	8	0LD57071Z	0LCH1351Z
									12	5/32" Hex	#2 - #14	40-50 in-lbs			
950	3	AL		2	9/16" Hex	750kcmil - 1/0	600 in-lbs		4	1/4" Hex	3/0 - #6	180 in-lbs	8	0LD57073Z	0LCH1351Z
									12	5/32" Hex	#2 - #14	40-50 in-lbs			

Note: AL = Aluminum / CU = Copper
**Covers sold separately*

© 2023 Littelfuse, Inc.

POWR-BLOKS

Splicer Block Selection Guide

AMP PER POLE	POLES	CONNECTOR MATERIAL	LINE CONNECTION					LOAD CONNECTION					FIGURE	CATALOG/ ORDERING NUMBER	*PLASTIC COVER ORDERING NUMBER
			CONNECTOR IMAGE	OPENINGS PER POLE	LUG TYPE	WIRE RANGE	TORQUE RANGE	CONNECTOR IMAGE	OPENINGS PER POLE	LUG TYPE	WIRE RANGE	TORQUE RANGE			
115	1	AL		1	Slotted	#2 - #14	35-50 in-lbs		1	Slotted	#2 - #14	35-50 in-lbs	10	0LS13301Z	LPBC1441
115	2			1	Slotted	#2 - #14	35-50 in-lbs		1	Slotted	#2 - #14	35-50 in-lbs	10	0LS13302Z	LPBC1442
115	3			1	5/32" Hex	#2 - #14	40-50 in-lbs		1	5/32" Hex	#2 - #14	40-50 in-lbs	2	LFS13003Z	-
115	4			1	Slotted	#2 - #14	35-50 in-lbs		1	Slotted	#2 - #14	35-50 in-lbs	10	0LS13304Z	LPBC1444
115	1	AL		1	Slotted	#2 - #14	35-50 in-lbs		1	Slotted	#2 - #14	35-50 in-lbs	3	0LS25521Z	LPBC21
115	2			1	Slotted	#2 - #14	35-50 in-lbs		1	Slotted	#2 - #14	35-50 in-lbs	3	0LS25522Z	LPBC22
115	3			1	Slotted	#2 - #14	35-50 in-lbs		1	Slotted	#2 - #14	35-50 in-lbs	3	0LS25523Z	LPBC23
150	1	CU		1	3/16" Hex	1/0 - #14	35-120 in-lbs		1	3/16" Hex	1/0 - #14	35-120 in-lbs	3	0LS21211Z	LPBC21
150	2			1	3/16" Hex	1/0 - #14	35-120 in-lbs		1	3/16" Hex	1/0 - #14	35-120 in-lbs	3	0LS21212Z	LPBC22
150	3			1	3/16" Hex	1/0 - #14	35-120 in-lbs		1	3/16" Hex	1/0 - #14	35-120 in-lbs	3	0LS21213Z	LPBC23
175	1	AL		1	5/16" Hex	2/0 - #14	35-120 in-lbs		1	5/16" Hex	2/0 - #14	35-120 in-lbs	3	0LS25721Z	LPBC21
175	2			1	5/16" Hex	2/0 - #14	35-120 in-lbs		1	5/16" Hex	2/0 - #14	35-120 in-lbs	3	0LS25722Z	LPBC22
175	3			1	3/16" Hex	2/0 - #14	40-120 in-lbs		1	3/16" Hex	2/0 - #14	40-120 in-lbs	3	LFS25723Z	LPBC23
175	1	AL		1	5/16" Hex	2/0 - #14	35-120 in-lbs		1	5/16" Hex	2/0 - #14	35-120 in-lbs	4	0LS25721ZXDIN	0LCH1321Z
175	2			1	5/16" Hex	2/0 - #14	35-120 in-lbs		1	5/16" Hex	2/0 - #14	35-120 in-lbs	4	0LS25722ZXDIN	0LCH1322Z
175	3			1	5/16" Hex	2/0 - #14	35-120 in-lbs		1	5/16" Hex	2/0 - #14	35-120 in-lbs	4	0LS25723ZXDIN	0LCH1323Z
175	Adder			1	–	2/0 - #14	35-120 in-lbs		1	–	2/0 - #14	35-120 in-lbs	4	0LS2572AZXDIN	-
175	1	CU		1	5/16" Hex	2/0 - #14	35-120 in-lbs		1	5/16" Hex	2/0 - #14	35-120 in-lbs	4	0LS29721ZXDIN	0LCH1321Z
175	2			1	5/16" Hex	2/0 - #14	35-120 in-lbs		1	5/16" Hex	2/0 - #14	35-120 in-lbs	4	0LS29722ZXDIN	0LCH1322Z
175	3			1	5/16" Hex	2/0 - #14	35-120 in-lbs		1	5/16" Hex	2/0 - #14	35-120 in-lbs	4	0LS29723ZXDIN	0LCH1323Z
175	Adder			1	–	2/0 - #14	35-120 in-lbs		1	–	2/0 - #14	35-120 in-lbs	4	0LS2972AZXDIN	-
255	1	AL		1	5/16" Hex	250kcmil - #6	275 in-lbs		1	5/16" Hex	250kcmil - #6	275 in-lbs	5	0LS31231Z	LPBC31
255	2			1	5/16" Hex	250kcmil - #6	275 in-lbs		1	5/16" Hex	250kcmil - #6	275 in-lbs	5	0LS31232Z	LPBC32
255	3			1	5/16" Hex	250kcmil - #6	275 in-lbs		1	5/16" Hex	250kcmil - #6	275 in-lbs	5	0LS31233Z	LPBC33
255	1	CU		1	3/8" Hex	250kcmil - #6	375 in-lbs		1	3/8" Hex	250kcmil - #6	375 in-lbs	5	0LS31241Z	LPBC31
255	2			1	3/8" Hex	250kcmil - #6	375 in-lbs		1	3/8" Hex	250kcmil - #6	375 in-lbs	5	0LS31242Z	LPBC32
255	3			1	3/8" Hex	250kcmil - #6	375 in-lbs		1	3/8" Hex	250kcmil - #6	375 in-lbs	5	0LS31243Z	LPBC33
310	2	AL		1	5/16" Hex	350kcmil - #6	275 in-lbs		1	5/16" Hex	350kcmil - #6	275 in-lbs	1	0LS03032Z	LPBC02
310	3			1	5/16" Hex	350kcmil - #6	275 in-lbs		1	5/16" Hex	350kcmil - #6	275 in-lbs	1	0LS03033Z	LPBC03
310	1	AL		1	5/16" Hex	350kcmil - #6	275 in-lbs		1	5/16" Hex	350kcmil - #6	275 in-lbs	5	0LS31261Z	LPBC31
310	2			1	5/16" Hex	350kcmil - #6	275 in-lbs		1	5/16" Hex	350kcmil - #6	275 in-lbs	5	0LS31262Z	LPBC32
310	3			1	5/16" Hex	350kcmil - #6	275 in-lbs		1	5/16" Hex	350kcmil - #6	275 in-lbs	5	0LS31263Z	LPBC33
350	3	AL		2	5/16" Hex	2/0 - #14	35-120 in-lbs		2	5/16" Hex	2/0 - #14	35-120 in-lbs	9	0LS33053Z	0LCH1333Z
420	1	AL		1	1/2" Hex	600kcmil - #4	500 in-lbs		1	1/2" Hex	600kcmil - #4	500 in-lbs	6	0LS45571Z	LPBC41
420	2			1	1/2" Hex	600kcmil - #4	500 in-lbs		1	1/2" Hex	600kcmil - #4	500 in-lbs	6	0LS45572Z	LPBC42
420	3			1	1/2" Hex	600kcmil - #4	500 in-lbs		1	1/2" Hex	600kcmil - #4	500 in-lbs	6	0LS45573Z	LPBC43
510	3	AL		2	5/16" Hex	250kcmil - #6	275 in-lbs		2	5/16" Hex	250kcmil - #6	275 in-lbs	9	0LS33203Z	0LCH1333Z
620	1	AL		2	5/16" Hex	350kcmil - #4	275 in-lbs	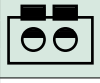	2	5/16" Hex	350kcmil - #4	275 in-lbs	7	0LS51291Z	LPBC51
620	2			2	5/16" Hex	350kcmil - #4	275 in-lbs		2	5/16" Hex	350kcmil - #4	275 in-lbs	7	0LS51292Z	LPBC52
620	3			2	5/16" Hex	350kcmil - #4	275 in-lbs		2	5/16" Hex	350kcmil - #4	275 in-lbs	7	0LS51293Z	LPBC53
760	1	AL		2	3/8" Hex	500kcmil - #4	375 in-lbs		2	3/8" Hex	500kcmil - #4	375 in-lbs	7	0LS53011Z	LPBC51
760	2			2	3/8" Hex	500kcmil - #4	375 in-lbs		2	3/8" Hex	500kcmil - #4	375 in-lbs	7	0LS53012Z	LPBC52
760	3			2	3/8" Hex	500kcmil - #4	375 in-lbs		2	3/8" Hex	500kcmil - #4	375 in-lbs	7	0LS53013Z	LPBC53

Note: AL = Aluminum / CU = Copper
*Note: *Covers sold separately*

POWR-BLOKS

Distribution Block and Splicer Block Outline Drawings

Dimensions Inches (mm)

Figure 1

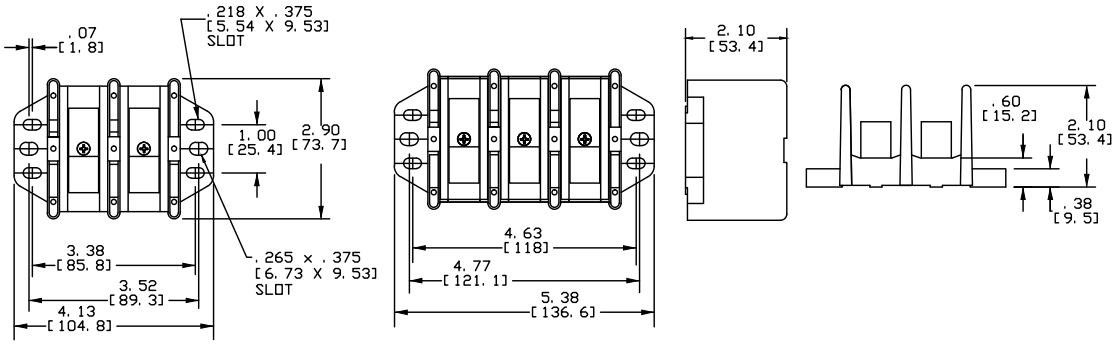

2-pole 3-pole

Figure 2

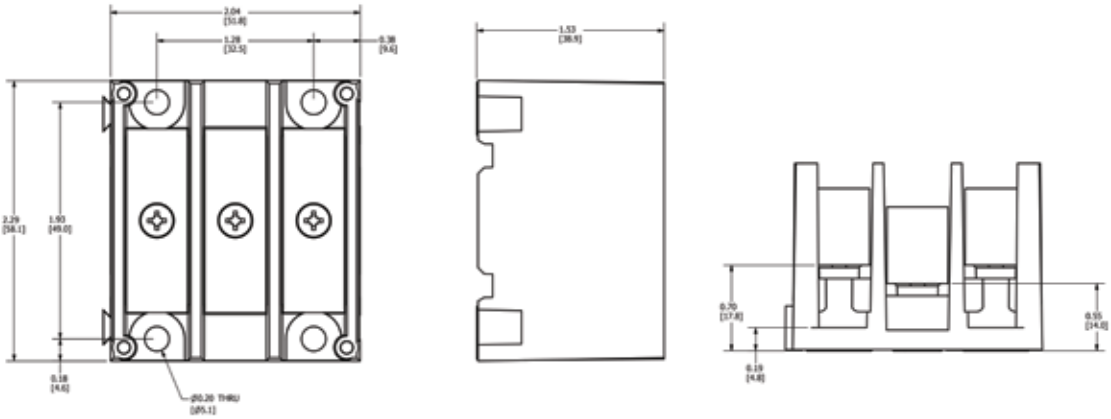

3-pole

Figure 3

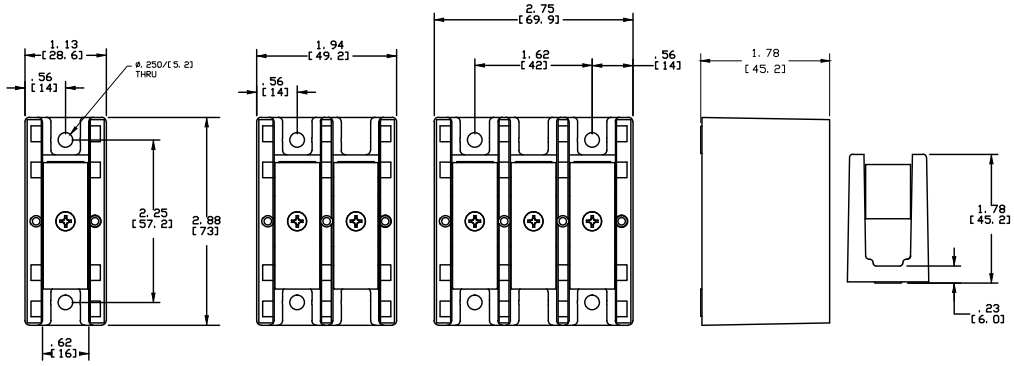

1-pole 2-pole 3-pole

 © 2023 Littelfuse, Inc.

POWR-BLOKS

Distribution Block and Splicer Block Outline Drawings

Dimensions Inches (mm)

Figure 4

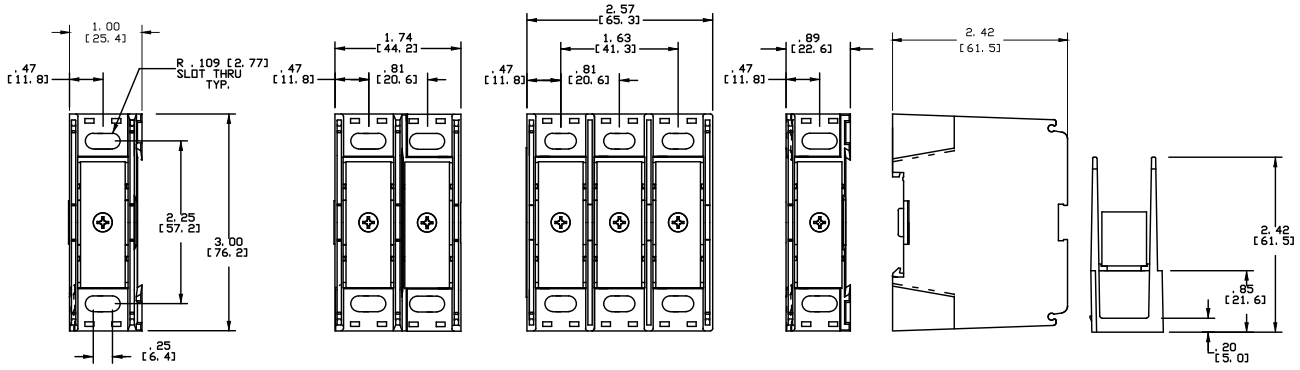

1-pole 2-pole 3-pole Adder

Figure 5

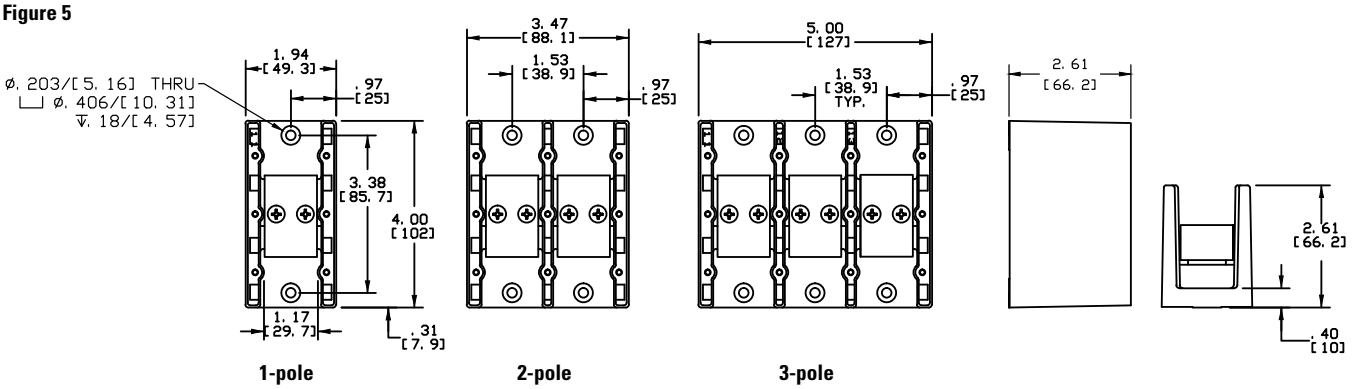

1-pole 2-pole 3-pole

Figure 6

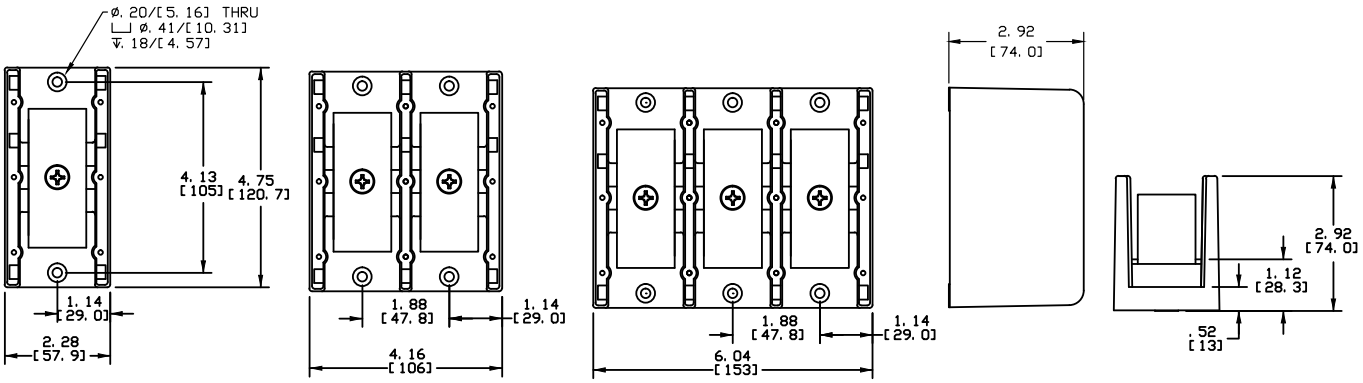

1-pole 2-pole 3-pole

POWR-BLOKS

Distribution Block and Splicer Block Outline Drawings

Dimensions Inches (mm)

Figure 7

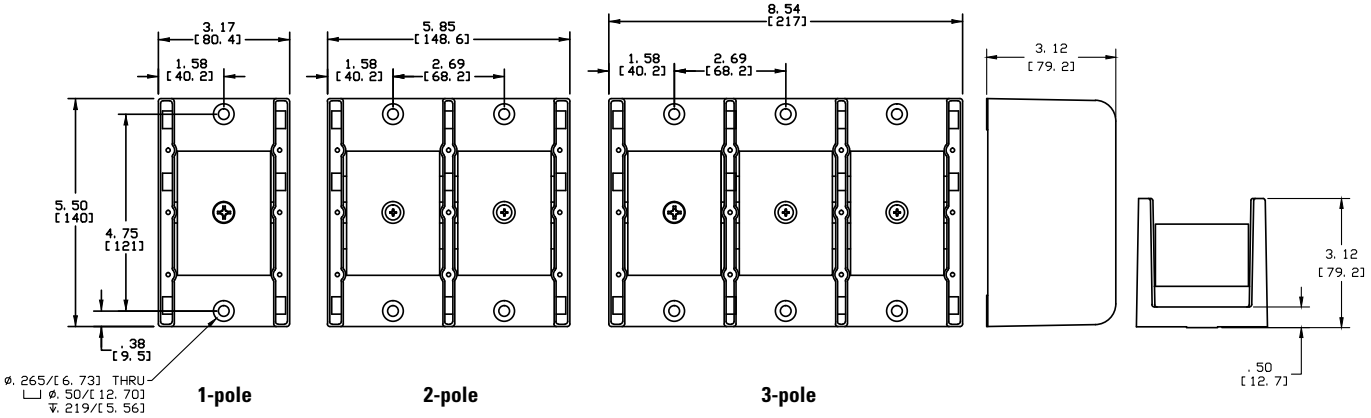

Figure 8

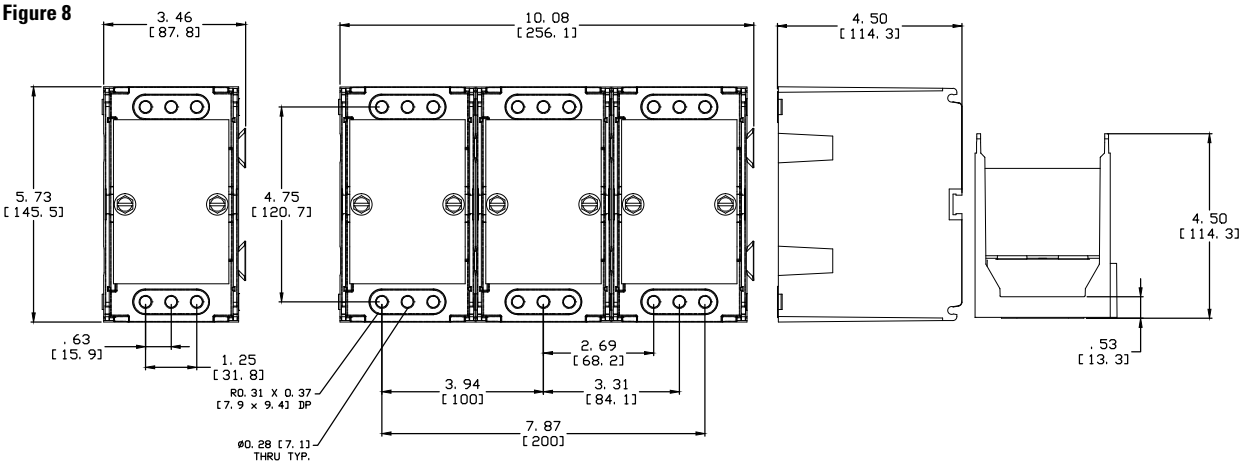

Figure 9

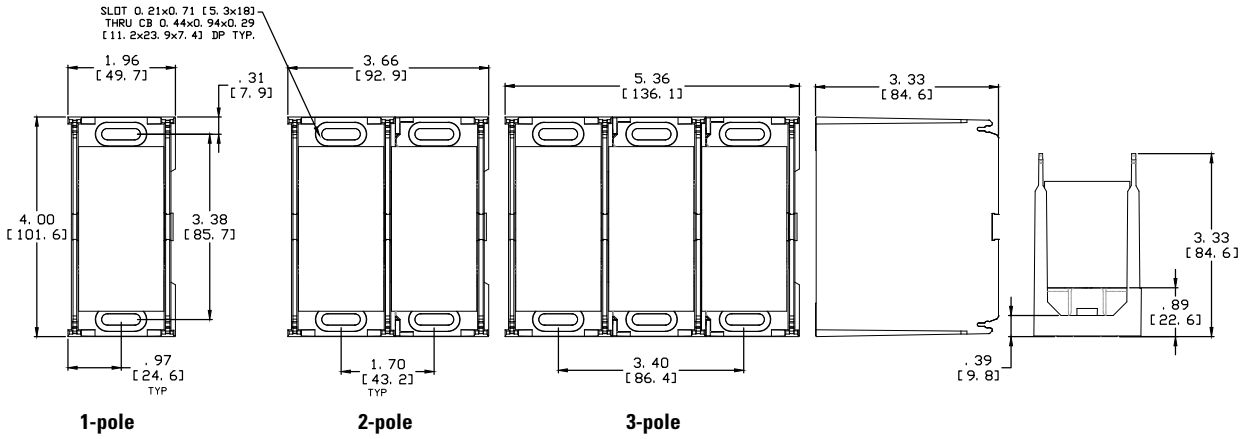

© 2023 Littelfuse, Inc.

POWR-BLOKS

Distribution Block and Splicer Block Outline Drawings

Dimensions Inches (mm)

Figure 10

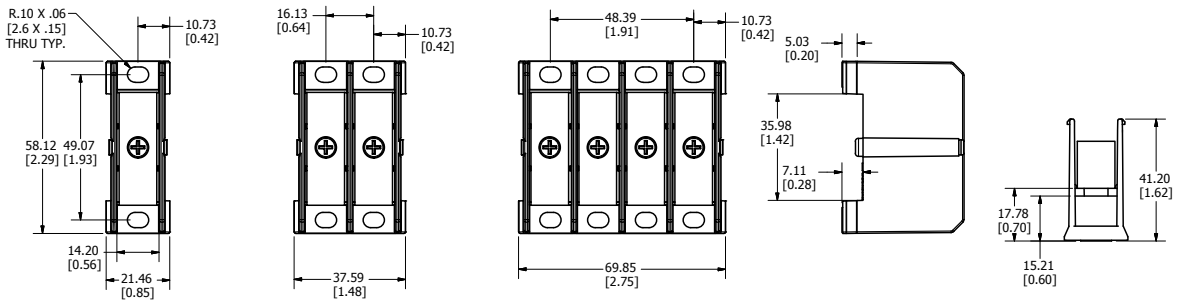

1-pole **2-pole** **4-pole**

GDB SERIES TOUCH-SAFE POWR-BLOKS

Global Distribution Blocks



Description

POWR-BLOKS Global Distribution Blocks add safety and mounting versatility to our distribution block solutions. The Global Distribution Blocks are approved to UL standards. The Global Distribution Blocks are IP20 finger safe to reduce the risk of contact and eliminate the need for block or panel covers. Installation is quick and easy, all blocks can be mounted on DIN rail or to the panel.

Features/Benefits

- Global part meeting UL standards
- Space saving design
- Integrated touch-safe cover to increase safety
- IP20 protection rating
- Mounts to DIN rail or panels
- Reliable brass connections for excellent continuity in a smaller design

Specifications

Voltage Rating	UL: 600 VAC/VDC
Ampere Rating	80 – 335 A
Material	Thermoplastic
Connector	GDBxxxx: Brass GDBAxxxx: Aluminum (Tin Plated)
Flammability Rating	UL94 V-0
Approvals	UL Recognized (File: E309688, E171395) UL Listed (File: E482231) CSA Certified (File: 700111)
Operating Temperature	-40°C to +90°C
Storage Temperature	-40°C to +100°C
Relative Humidity	50% @ 40°C, 90% @ 20°C
Environmental	RoHS compliant

Web Resources

For additional information visit **Littelfuse.com/gdb**

Electrical Specifications

CATALOG/ ORDERING NUMBER	POLES	AMPS	WIRE RANGE				OVERCURRENT PROTECTION FUSE REQUIRED						SCCR IN RMS SYM AMPS	AGENCY APPROVALS			
			LINE CONNECTION		LOAD CONNECTION												
			LINE	OPENINGS PER POLE	OPENINGS PER POLE	LOAD	CLASS J (JTD_ID)	Class T (JLLN, JLLS)	Class RK1 (LLNRK, LLSRK, KLNR, KLSR)	Class RK5 (FLNR, FLSR, IDSR)	CLASS G (SLC)	CLASS CC (CCMR, KLDR, KLKR)		UR	cURus	UL	CSA
GDB60801Z	1	80	1	#8 - #4	6	#8 - #4 #10 - #14	80	- -	- -	- -	- -	- -	100,000		•		
GDB61151Z	1	115	1	#8 - #2 #10 - #6	6	#14 - #4	125	- -	- -	- -	- -	- -	100,000		•		
GDB61153Z	3	115	1	#8 - #2	6	#14 - #4	125	-	-	-	-	-	100,000		•		
GDBAD241Z	1	115	1	#10 - #2	4	#14 - #10	125	200	100	30	60	30	65,000			•	•
GDB61601Z	1	160	1	#8 - 2/0	6	#14 - #4	175	-	-	-	-	-	100,000	•			
GDB61753Z	3	175	1	#8 - 2/0	6	#14 - #4	175	-	-	-	-	-	100,000		•		
GDBAD451Z	1	200	1	#8 - 3/0 #8 - 3/0	4	#8 - #2 #14 - #8	225 100	225 110	200 100	60 30	60 60	30	100,000			•	•
GDB63101Z	1	310	1	3/0 - 350 kcmil	11	#14 - #2 #14 - #6 #14 - #8	350	-	-	-	-	-	100,000	•			
GDBAD741Z	1	335	1	#6 - 400 kcmil #14 - 3/0	8	#14 - #2	-	-	-	-	-	-	10,000	•			•

© 2023 Littelfuse, Inc.

GDB SERIES TOUCH-SAFE POWR-BLOKS

Global Distribution Blocks

Mechanical Specification

CATALOG/ ORDERING NUMBER	POLES	AMP RATING PER POLE (UL)	LINE CONNECTION					LOAD CONNECTION				
			OPENINGS PER POLE	OPENING DIAMETER	SCREW TYPE	WIRE RANGE	TORQUE LB-IN (NM)	OPENINGS PER POLE	OPENING DIAMETER	SCREW TYPE	WIRE RANGE	TORQUE LB-IN (NM)
GDB60801Z	1	80	1	0.28 in (7.0 mm)	Slotted	#8 – #4 (Cu)	13.5 (1.5)	6	2x 0.28 in (2x 7.0 mm)	Slotted	#8 - #4 (Cu)	13.5 (1.5)
									4x 0.18 in (4x 4.5 mm)		#10 - #14 (Cu)	7.2 (0.8)
GDB61151Z	1	115	2	0.39 in (10.0 mm)	Hex 4 mm	#8 – #2 (Cu) #10 – #6 (Cu)	31 (3.5)	6	0.28 in (7.0 mm)	Slotted	#14 – #4 (Cu)	17.5 (2)
GDB61153Z	3	115	1	0.39 in (10.0 mm)	Hex 4mm	#8 - #2 (Cu)	31 (3.5)	6	0.25 in (6.5 mm)	Hex 3mm	#14 - #4 (Cu)	17.5 (2)
GDBAD241Z	1	115	1	0.312 in (7.9 mm)	Hex 4 mm	#14 - #2 (Cu/Al)	35 (4.0) #14 - #10 40 (4.)5 #8 45 (5.1) #6 - #4 50 (5.6) #3 - #2	4	0.159 in (4.0 mm)	Hex 2 mm	#14 - #10 (Cu/Al)	7 (0.8)
GDB61601Z	1	160	1	0.49 in (12.5 mm)	Hex 5mm	#8 - 2/0 (Cu)	35.5 (4)	6	0.28 in (7.0 mm)	Slotted	#14 - #4 (Cu)	17.5 (2.0)
GDB61753Z	3	175	1	0.47 in (12.0 mm)	Hex 5mm	#8 - 2/0 (Cu)	35.5 (4)	6	0.25 in (6.5 mm)	Hex 3mm	#14 - #4 (Cu)	17.5 (2.0)
GDBAD451Z	1	200	1	0.531 in (13.5 mm)	Hex 6mm	#14 - 3/0 (Cu/Al)	50 (5.6) #14 - #10 180 (20.3) #8 - 3/0	4	0.313 in (7.9mm)	Hex 5mm	#14 - #2 (Cu/Al)	40 (4.5) #14 - #10 50 (5.6) #8 - #2
GDB63101Z	1	310	1	0.75 in (19.0 mm)	Hex 8mm	3/0 - 350 kcmil (Cu)	230 (26.0)	11	2x 0.35 in (2x 9.0mm)	Slotted	#14 - #2 (Cu)	31 (3.5)
									5x 0.25 in (5x 6.5mm)		#14 - #6 (Cu)	18 (2.0)
									4x 0.21 in (4x 5.3mm)		#14 - #8 (Cu)	
GDBAD741Z	1	335	1	0.516 in (13.1 mm)	Hex 8mm & 6mm	#14 - 400 kcmil (Cu/Al)	40 (4.5)#14 - #8 80 (9.0) #6 - #2	8	0.375 in (9.5 mm)	Hex 5mm	#14 - #2 (Cu/Al)	40 (4.5) #14 - #8
							120 (13.6) #1 - #3/0 275 (31.10 #6 - #1/0 375 (42.4) 2/0 - 400 kcmil					80 (9.0) #6 - #2

© 2023 Littelfuse, Inc.

GDB SERIES TOUCH-SAFE POWR-BLOKS

Global Distribution Blocks

Dimensions Inches (mm)

GDB60801Z

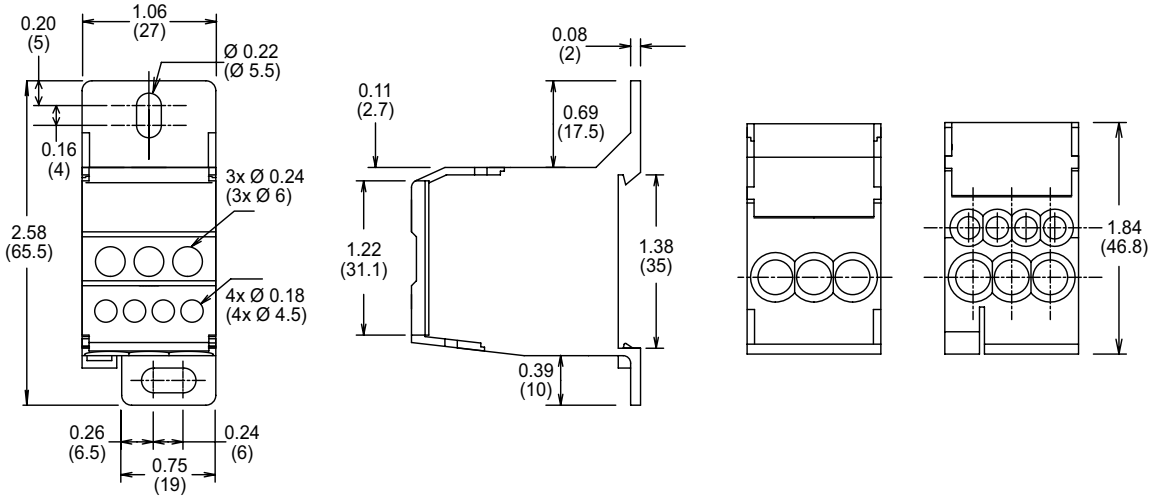

GDB61151Z

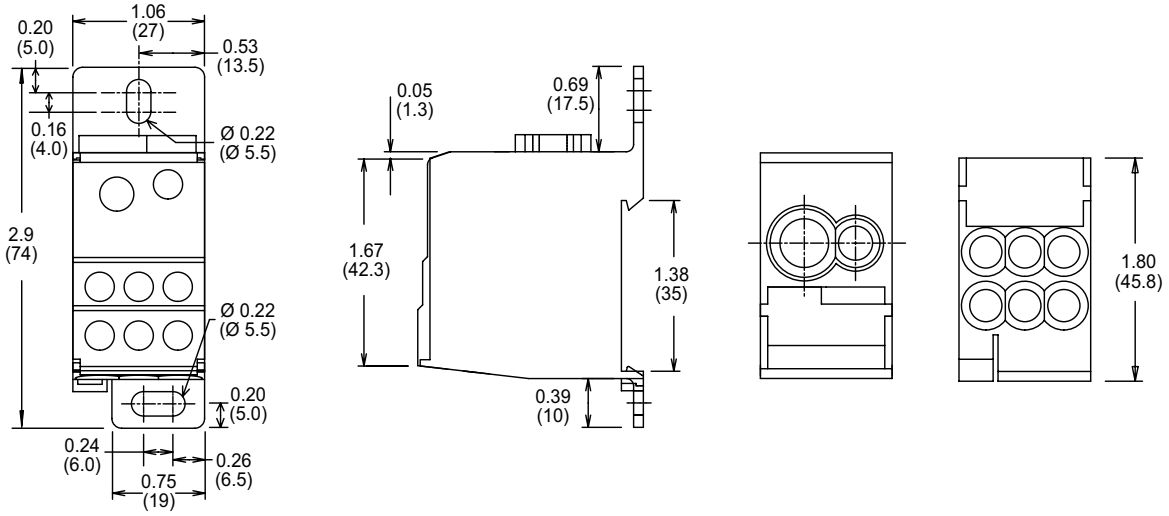

GDB61601Z

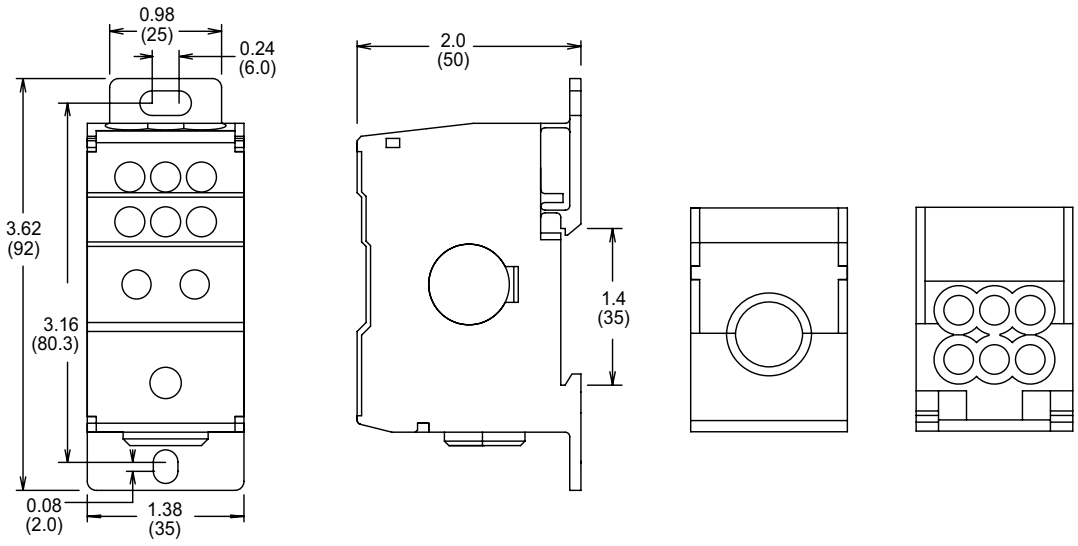

© 2023 Littelfuse, Inc.

GDB SERIES TOUCH-SAFE POWR-BLOKS

Global Distribution Blocks

Dimensions Inches (mm)

GDB61153Z
GDB61753Z

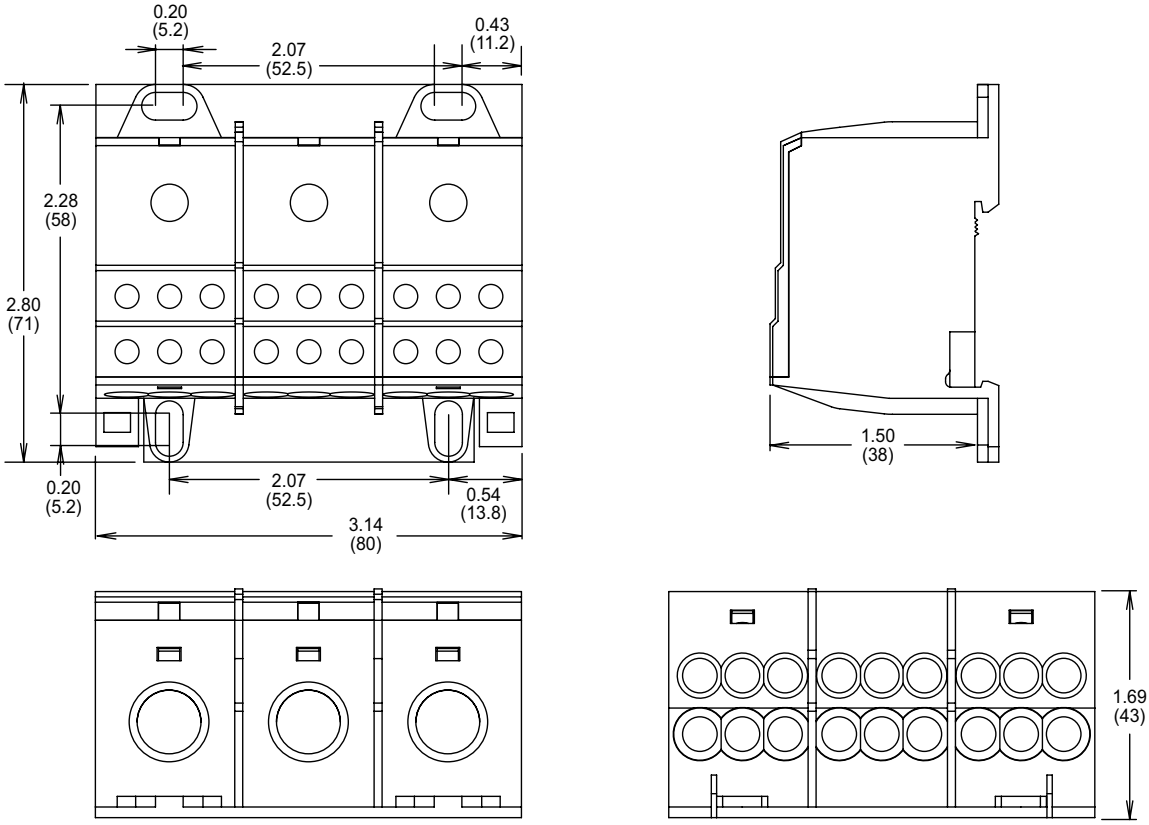

GDB63101Z

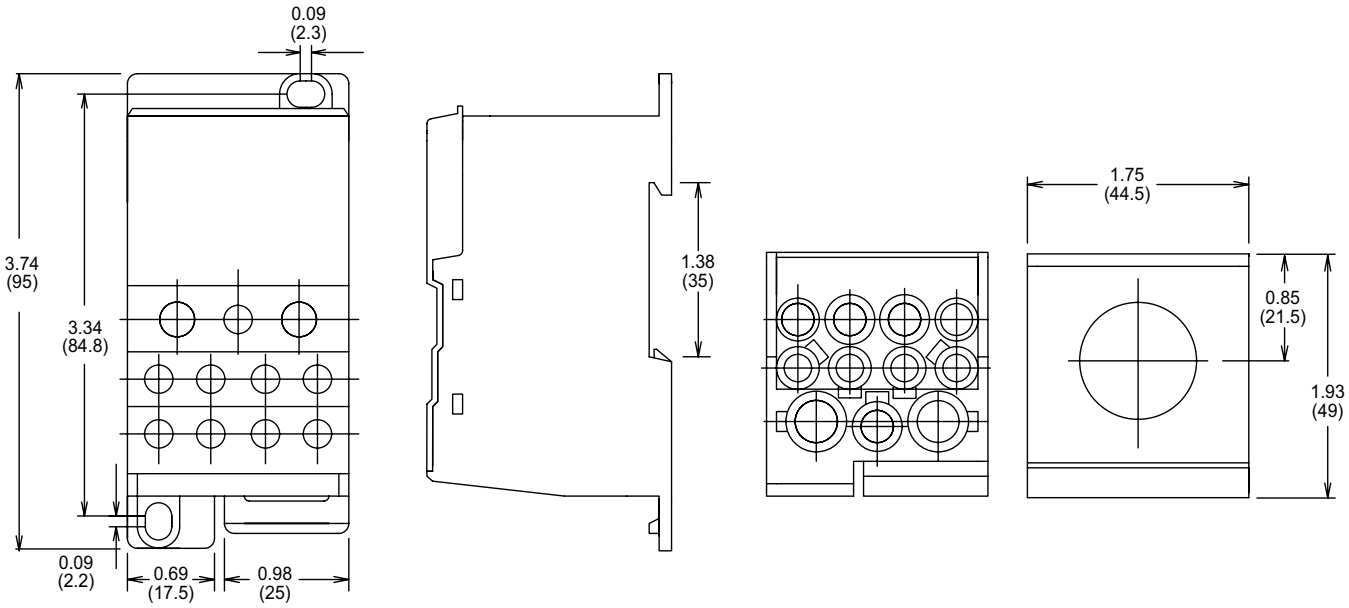

GDB SERIES TOUCH-SAFE POWR-BLOKS

Global Distribution Blocks

Dimensions Millimeters (in)

GDBAD451Z

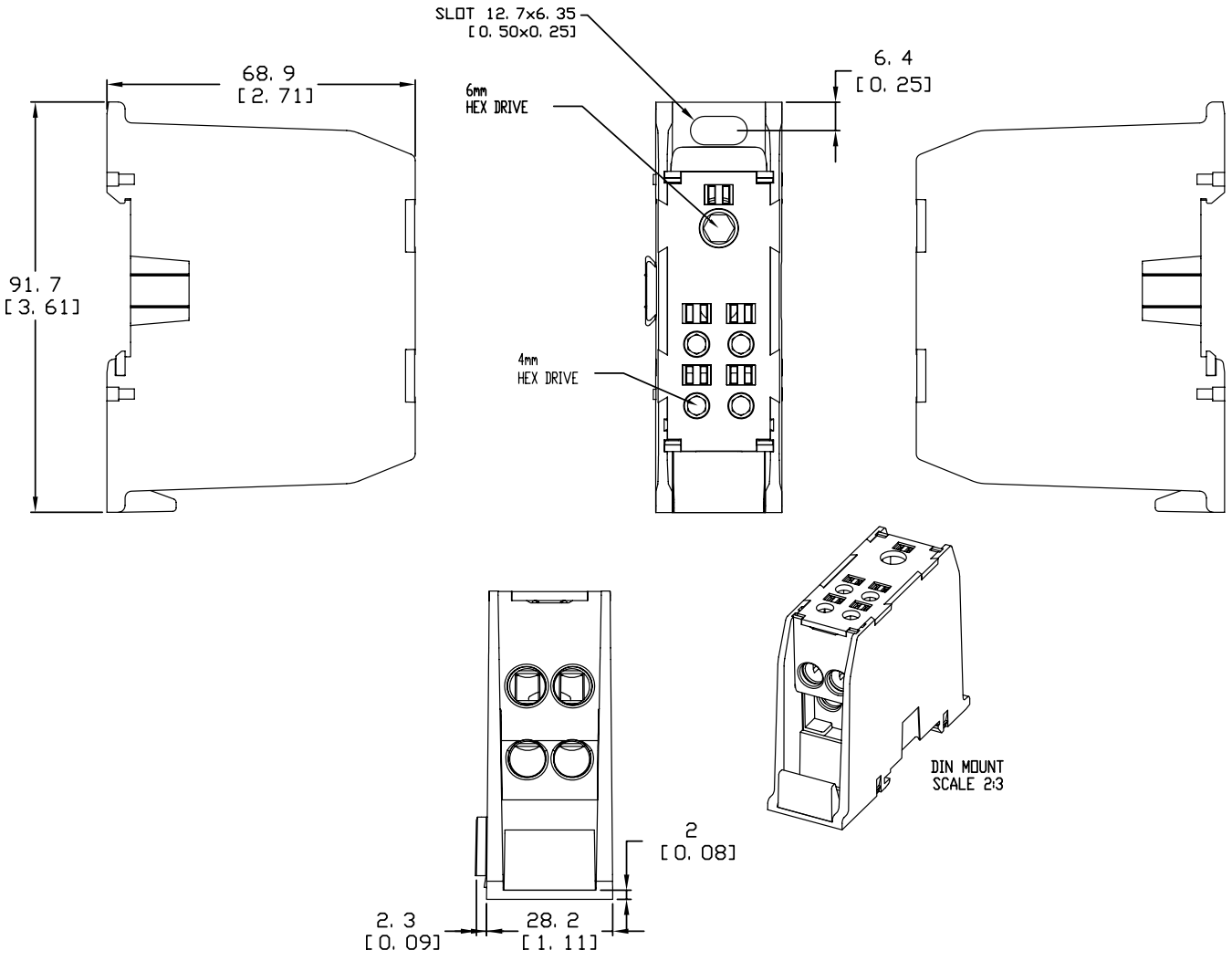

© 2023 Littelfuse, Inc.

GDB SERIES TOUCH-SAFE POWR-BLOKS

Global Distribution Blocks

Dimensions Millimeters (in)

GDBAD741Z

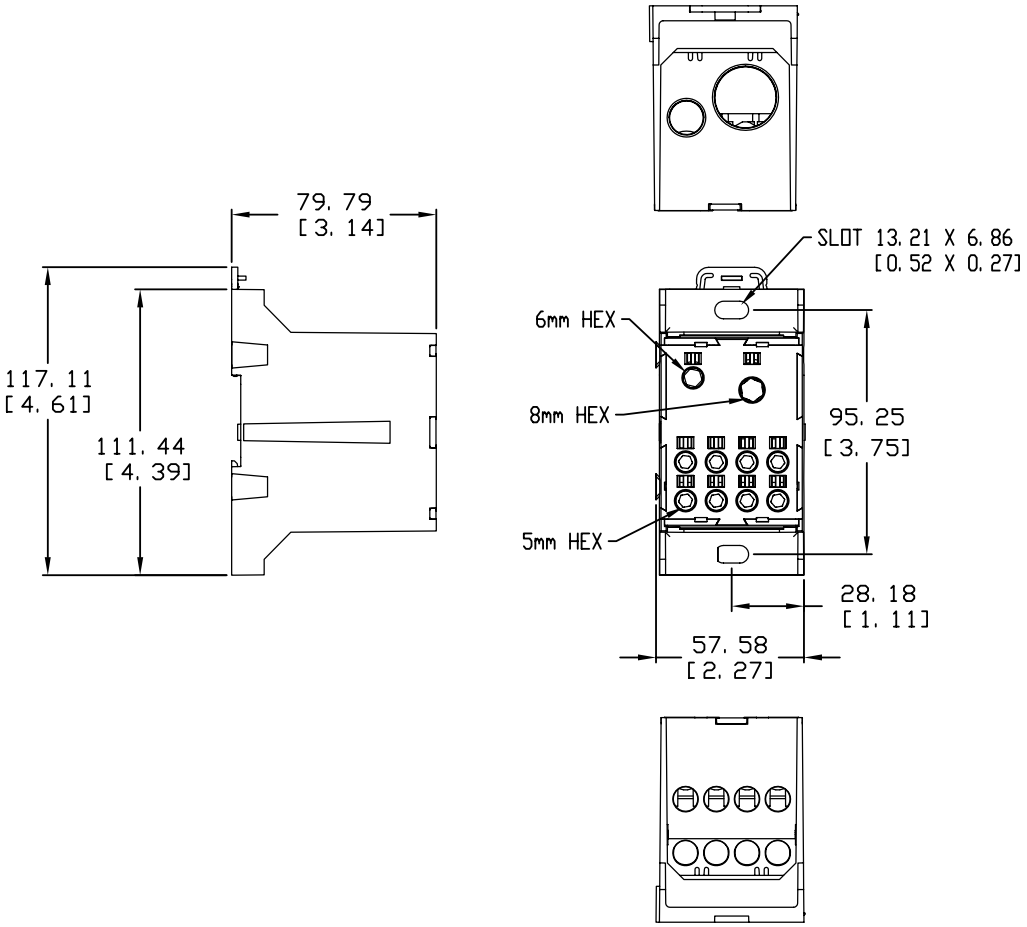

IN-LINE GLASS FUSE HOLDERS

150322



Description

The 150322 is a 500 Vac/125 Vdc rated inline fuse holder ideal for applications where supplemental protection is needed, such as lighting ballasts and power supplies. 8-inch pre-stripped wire leads and fuse clips come preassembled for quick installation.

Features/Benefits

- Single piece body minimizes component count
- High voltage rating accommodates many power applications
- Wire leads are pre-attached to fuse clips for quick assembly
- Single piece molded body
- UL Recognized

Recommended Fuses

3AG (312, 313 Series) 34
3AB (314, 326, 505 Series) 33

Specifications

Voltage Rating	500 Vac, 125 Vdc
Ampere Rating	15 A
Fuse Type	¼" x 1¼"
Fuse Clips	Tin-plated brass
Wire	Black 18 AWG, 150° C Stranded
Molded Body	Single piece thermoplastic
Flammability Rating	UL94 V-0
Approvals	UL Recognized (File: E14721)
Environmental	RoHS complaint, Lead (Pb) free
Storage Temperature	-40° C to 80° C
Operating Temperature	-55° C to 125° C

Ordering Information

CATALOG NUMBER	ORDERING NUMBER	STANDARD PACK
150322	01500322H	100 PIECES

Web Resources

For more information, visit: **littelfuse.com/150322**

Additional In-Line Glass Fuse Holders

Twist-Lock
155 Series
In-Line Mount
32 V 3AG, SFE



Heavy-Duty Bayonet
155 Series
In-Line Mount
32 V 3AG



Special Type
150 Series
In-Line Mount
250 V 2AG, 5x20mm



Dimensions Inches

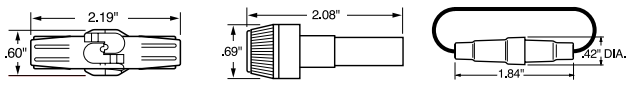

Dimensions mm (inches)

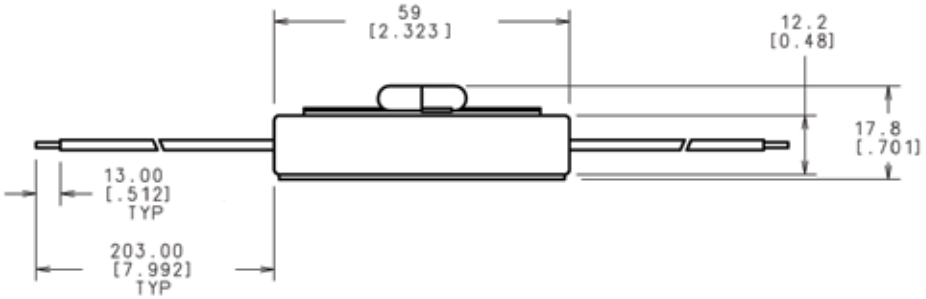

© 2023 Littelfuse, Inc.

IN-LINE WATERTIGHT FUSE HOLDERS



LEB/LEX LEC/LEY

Specifications

Voltage rating	600 VAC/VDC
Ampere rating	up to 30 A
Interrupting rating	200 kA rms symmetrical (with Class CC fuses)
Approvals	**LEB/LEX series** UL Recognized Miscellaneous Fuse holder per UL UL 4248 (File: E14721) CSA Certified per C22.2, No. 39 (File: LR7316) **LEC/LEY series** UL Listed Class CC Branch Circuit Fuse holder per UL 512 (File: E14721) CSA Certified per C22.2, No. 39 (File: LR7316)

Features/Benefits

- Design increases safety by individual device disconnection for easy servicing, eliminating shock risk
- Increases efficiency by preventing faulted ballast from severely damaging fixture or device
- Watertight seal
- Variety of terminations available for flexible design
- Insulating boots available for harsh environments

Description

Recently redesigned, the Littelfuse 600 VAC/VDC in-line watertight fuse holders allow maximum protection for high humidity and corrosive environments. The fuse holders are designed to be touch-safe and flexible for use in a variety of applications. See the list below for the redesigned part numbers.

Applications

- Street lighting and parking lot lighting
- Sports lighting and various outdoor illuminated signs
- Boat electrical circuits, tractors/yard equipment and general outdoor circuit protection (such as traffic signals, alley lighting and electric wheelchairs)

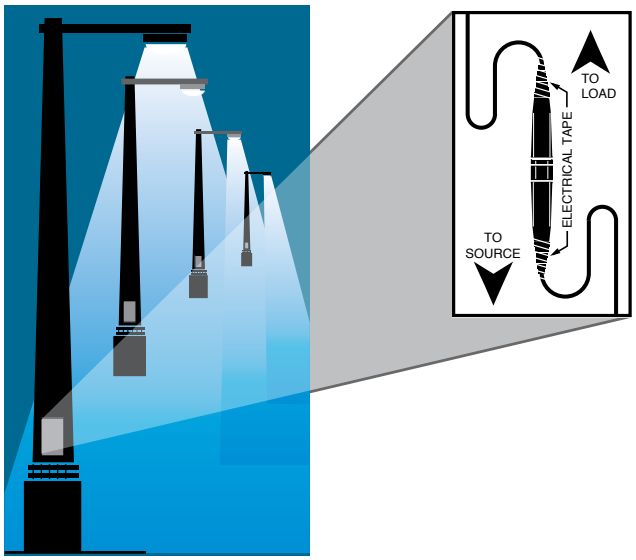

Recommended Fuses

LEB/LEX series:

Accepts all Littelfuse Midget and Class CC series fuses

CCMR 27
KLDR, KLKR 28
BLF, BLN, FLM, FLQ, KLK, KLKD 30

LEC/LEY series:

Accepts only Littelfuse Class CC fuses

CCMR 27
KLDR, KLKR 28

Web Resources

Download CAD drawings, dimensions and other technical information: **littelfuse.com/in-line**

Look for these part numbers featuring our improved design

- Better surface area for ergonomic comfort, improved grip and better torque
- More pronounced seating – automatically seats as user begins twisting
- Chamfered edges for additional installation comfort

BASE PART NUMBER	PREVIOUS ORDERING NUMBER	NEW ORDERING NUMBER
LEB-AA	0LEB00AAX	0LEB00AAXK
LEB-AA-S	0LEB0AASX	0LEB0AASXK
LEB-AB	0LEB00ABX	0LEB00ABXK
LEB-AYC-S	0LEBAYCSX	0LEBAYCSXK
LEB-BB	0LEB00BBX	0LEB00BBXK
LEB-JJ	0LEB00JJX	0LEB00JJXK
LEB-JJ-S	0LEB0JJSX	0LEB0JJSXK

© 2023 Littelfuse, Inc.

IN-LINE WATERTIGHT FUSE HOLDERS

Ordering Information

To order Littelfuse in-line fuse holders by part number, refer to the charts on the next page.

LEB - AA - S

- **Littelfuse Series**
- **Load Side/Terminal Size**
- **Line Side/Terminal Size**
- **Breakaway Feature**

SERIES	DESCRIPTION
LEB	One-pole in-line fuse holder for Midget and Class CC fuses
LEC	One-pole in-line fuse holder for Class CC fuses
LET	One-pole in-line fuse holder with permanently installed solid neutral
LEX	Two-pole in-line fuse holder for Midget and Class CC fuses
LEY	Two-pole in-line fuse holder for Class CC fuses



Recommended Crimping Tools

The following crimping tools or equivalents may be used on either the non-breakaway or breakaway watertight in-line fuse holders.

TERMINAL SIZE	T&B PART NUMBER	BURNDY PART NUMBER
A	WT161M	–
B	WT161M	MR4C
C	M5-GREY	Hypress Y34A
D	M5-BROWN	Hypress Y34A

Insulating Boots

- Molded from engineering-grade thermoplastics which provide high resistance to corrosive environments
- Standard with all breakaway style fuse holders
- For watertight protection of non-breakaway Y-pole termination, order one WPB1 and one WPB3 boot



ORDERING NUMBER	TERMINAL TYPE
WPB1	A, B, C, D, J
WPB3	Y

Dimensions Inches

1-Pole

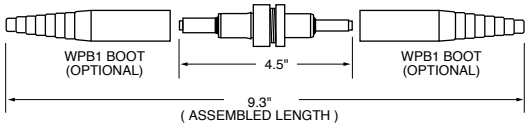

1-Pole Breakaway

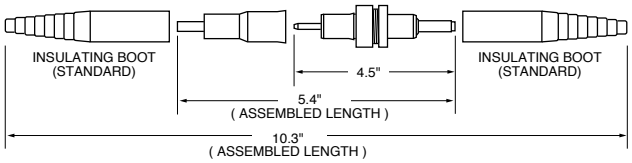

2-Pole

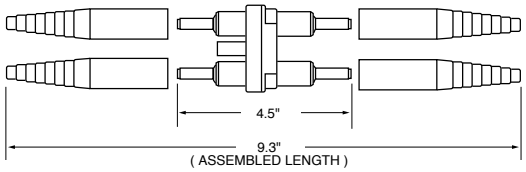

2-Pole Breakaway

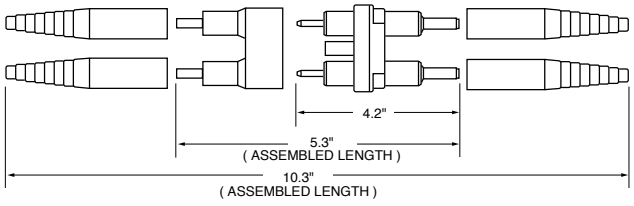

© 2023 Littelfuse, Inc.

IN-LINE WATERTIGHT FUSE HOLDERS

Ordering Information (1-Pole LEB/LEC and 2-Pole LEX/LEY for Class CC and Midget Fuses)

SINGLE POLE		DOUBLE POLE		LOAD TERMINAL SELECTION					LINE TERMINAL SELECTION				
STANDARD PART NUMBER	BREAKAWAY PART NUMBER	STANDARD PART NUMBER	BREAKAWAY PART NUMBER	TERMINAL TYPE	LOAD TERMINAL WIRE SIZE RANGE	NUMBER OF WIRES PER TERMINAL	SOLID WIRE	STRANDED WIRE	TERMINAL TYPE	LINE TERMINAL WIRE SIZE RANGE	NUMBER OF WIRES PER TERMINAL	SOLID WIRE	STRANDED WIRE
LEB-AA-K LEC-AA	LEB-AA-SK LEC-AA-S	LEX-AA LEY-AA	LEX-AA-S LEY-AA-S	Copper Crimp	#12 to #8 #12	1 2	• •	• •	Copper Crimp	#12 to #8 #12	1 2	• •	• •
LEB-AB-K LEC-AB	LEB-AB-S LEC-AB-S	LEX-AB LEY-AB	LEX-AB-S LEY-AB-S	Copper Crimp	#12 to #8 #12	1 2	• •	• •	Copper Crimp	#10 #6 #4	2 1 1	• • —	• • •
LEB-AC LEC-AC	— —	LEX-AC LEY-AC	—	Copper Crimp	#12 to #8 #12	1 2	• •	• •	Copper Crimp	#8 #4	2 1	• —	• •
LEB-AD LEC-AD	— —	LEX-AD LEY-AD	— —	Copper Crimp	#12 to #8 #12	1 2	• •	• •	Copper Crimp	#6 #2	2 1	• —	• •
LEB-AJ LEC-AJ	LEB-AJ- S LEC-AJ-S	—	—	Copper Crimp	#12 to #8 #12	1 2	• •	• •	Copper Set-Screw	#12 to #8 #10 to #2	1 1	• —	— •
LEB-AYC LEC-AYC	LEB-AYC-SK LEC-AYC-S	LEX-AYC LEY-AYC	LEX-AYC-S LEY-AYC-S	Copper Crimp	#12 to #8 #12	1 2	• •	• •	"Y" Type Copper Set-Screw	#12 to #8 #10 to #2	1 1	• —	— •
LEB-BA LEC-BA	LEB-BA-S LEC-BA-S	LEX-BA LEY-BA	LEX-BA-S LEY-BA-S	Copper Crimp	#10 #6 #4	2 1 1	• • —	• • •	Copper Crimp	#12 to #8 #12	1 2	• •	• •
LEB-BB-K LEC-BB	LEB-BB-S LEC-BB-S	LEX-BB LEY-BB	LEX-BB-S LEY-BB-S	Copper Crimp	#10 #6 #4	2 1 1	• • —	• • •	Copper Crimp	#10 #6 #4	2 1 1	• • —	• • •
LEB-BC LEC-BC	— —	LEX-BC LEY-BC	— —	Copper Crimp	#10 #6 #4	2 1 1	• • —	• • •	Copper Crimp	#8 #4	2 1	• —	• •
LEB-BD LEC-BD	— —	LEX-BD LEY-BD	— —	Copper Crimp	#10 #6 #4	2 1 1	• • —	• • •	Copper Crimp	#6 #2	2 1	• —	• •
LEB-BJ LEC-BJ	LEB-BJ-S LEC-BJ-S	— —	— —	Copper Crimp	#10 #6 #4	2 1 1	• • —	• • •	Copper Set-Screw	#12 to #8 #10 - #2	1 1	• —	— •
LEB-BYC LEC-BYC	LEB-BYC-S LEC-BYC-S	LEX-BYC LEY-BYC	LEX-BYC-S LEY-BYC-S	Copper Crimp	#10 #6 #4	2 1 1	• • —	• • •	"Y" Type Copper Set-Screw	#12 to #8 #10 - #2	1 1	• —	— •
LEB-CA LEC-CA	— —	LEX-CA LEY-CA	— —	Copper Crimp	#8 #4	2 1	• —	• •	Copper Crimp	#12 to #8 #12	1 2	• •	• •
LEB-CB LEC-CB	— —	LEX-CB LEY-CB	— —	Copper Crimp	#8 #4	2 1	• —	• •	Copper Crimp	#10 #6 #4	2 1 1	• • —	• • •
LEB-CC LEC-CC	— —	LEX-CC LEY-CC	— —	Copper Crimp	#8 #4	2 1	• —	• •	Copper Crimp	#8 #4	2 1	• —	• •
LEB-CD LEC-CD	— —	LEX-CD LEY-CD	— —	Copper Crimp	#8 #4	2 1	• —	• •	Copper Crimp	#6 #2	2 1	• —	• •
LEB-CJ LEC-CJ	— —	LEX-CJ LEY-CJ	— —	Copper Crimp	#8 #4	2 1	• —	• •	Copper Set-Screw	#12 to #8 #10 - #2	1 1	• —	• •
LEB-CYC LEC-CYC	— —	LEX-CYC LEY-CYC	— —	Copper Crimp	#8 #4	2 1	• —	• •	"Y" Type Copper Set-Screw	#12 to #8 #10 to #2	1 1	• —	— •
LEB-DA LEC-DA	— —	LEX-DA LEY-DA	— —	Copper Crimp	#6 #2	2 1	• —	• •	Copper Crimp	#12 to #8 #12	1 2	• •	— •
LEB-DB LEC-DB	— —	LEX-DB LEY-DB	— —	Copper Crimp	#6 #2	2 1	• —	• •	Copper Crimp	#10 #6 #4	2 1 1	• • —	• • •
LEB-DC LEC-DC	— —	LEX-DC LEY-DC	— —	Copper Crimp	#6 #2	2 1	• —	• •	Copper Crimp	#8 #4	2 1	• —	• •
LEB-DD LEC-DD	— —	LEX-DD LEY-DD	— —	Copper Crimp	#6 #2	2 1	• —	• •	Copper Crimp	#6 #2	2 1	• —	• •
LEB-DJ LEC-DJ	— —	LEX-DJ LEY-DJ	— —	Copper Crimp	#6 #2	2 1	• —	• •	Copper Set-Screw	#12 to #8 #10 - #8	2 1	• —	• •
LEB-DYC LEC-DYC	— —	LEX-DYC LEY-DYC	— —	Copper Crimp	#6 #2	2 1	• —	• •	"Y" Type Copper Set-Screw	#12 to #8 #10 to #8	1 1	• —	— •
LEB-JJ-K LEC-JJ	LEB-JJ-SK LEC-JJ-S	LEX-JJ LEY-JJ	LEX-JJ-S LEY-JJ-S	Copper Set-Screw	#12 to #8 #10 to #2	1 1	• —	— •	Copper Set-Screw	#12 to #8 #10 to #2	1 1	• —	— •
LEB-JYC LEC-JYC	LEB-JYC-S LEC-JYC-S	— —	— —	Copper Set-Screw	#12 to #8 #10 to #2	1 1	• —	— •	"Y" Type Copper Set-Screw	#12 to #8 #10 to #2	1 1	• —	— •

© 2023 Littelfuse, Inc.

IN-LINE WATERTIGHT FUSE HOLDERS

Ordering Information (Solid Neutral LET Fuse Holders)

STANDARD PART NUMBER	BREAKAWAY PART NUMBER	FUSE TYPE	LOAD TERMINAL SELECTION					LINE TERMINAL SELECTION				
			TERMINAL TYPE	LOAD TERMINAL WIRE SIZE RANGE	NUMBER OF WIRES PER TERMINAL	SOLID WIRE	STRANDED WIRE	TERMINAL TYPE	LINE TERMINAL WIRE SIZE RANGE	NUMBER OF WIRES PER TERMINAL	SOLID WIRE	STRANDED WIRE
LET-AA	LET-AA-S	Solid Neutral	Copper Crimp	#12 to #8 #12	1 2	• •	• •	Copper Crimp	#12 to #8 #12	1 2	• •	• •
LET-AB	LET-AB-S	Solid Neutral	Copper Crimp	#12 to #8 #12	1 2	• •	• •	Copper Crimp	#10 #6 #4	2 1 1	• • —	• • •
LET-AYC	LET-AYC-S	Solid Neutral	Copper Crimp	#12 to #8 #12	1 2	• •	• •	"Y" Type Copper Set-Screw	#12 to #8 #10 to #2	1 1	• —	— •
LET-BA	LET-BA-S	Solid Neutral	Copper Crimp	#10 #6 #4	2 1 1	• • —	• • •	Copper Crimp	#12 to #8 #12	1 2	• •	• •
LET-BB	LET-BB-S	Solid Neutral	Copper Crimp	#10 #6 #4	2 1 1	• • —	• • •	Copper Crimp	#10 #6 #4	2 1 1	• • —	• • •
LET-BYC	LET-BYC-S	Solid Neutral	Copper Crimp	#10 #6 #4	2 1 1	• • —	• • •	"Y" Type Copper Set-Screw	#12 to #8 #10 to #2	1 1	• —	— •
LET-JJ	LET-JJ-S	Solid Neutral	Copper Set-Screw	#12 to #8 #10 to #2	1 1	• —	— •	Copper Set-Screw	#12 to #8 #10 to #2	1 1	• —	— •
LET-JYC	LET-JYC-S	Solid Neutral	Copper Set-Screw	#12 to #8 #10 to #2	1 1	• —	— •	"Y" Type Copper Set-Screw	#12 to #8 #10 to #2	1 1	• —	— •

Ordering Information (Terminals)

TERMINAL DESIGNATION	TERMINAL DESCRIPTION	NUMBER OF WIRES PER TERMINAL	WIRE RANGE	SOLID WIRE	STRANDED WIRE
A	Copper Crimp	1 2	#12-#8 #12	• •	• •
B	Copper Crimp	2 1 1	#10 #6 #4	• • —	• • •
C	Copper Crimp	2 1	#8 #4	• —	• •
D	Copper Crimp	2 1	#6 #2	• —	• •
J	Copper Set-Screw	1 1	#12-#8 #10-#2	• —	— •
Y (2 terminals)	"Y" Style Copper Set-Screw	1 1	#12-#8 #10-#2	• —	— •

© 2023 Littelfuse, Inc.

IN-LINE WATERTIGHT FUSE HOLDERS

Two-Pole Breakaway Holder



Description

New Littelfuse LEXT-YY-S and LEX-YYC-S series breakaway fuse holders meet state and federal highway commission safety standards requiring fuse holders to readily disconnect from power in case of a pole knockdown.

The breakaway feature consists of a receptacle permanently attached to the power line and a fuse holder with matching terminals. If a knockdown occurs, the parts separate, leaving the energized conductor recessed and unexposed.

Applications

- Street lighting
- Marinas
- Travel trailer parks
- Physically strained fuse holders applications

Features/Benefits

- LEXT-YY version has a permanently installed "neutral" slug to prevent the neutral from accidentally being fused
- LEX-YYC version allows for fusing of line-to-line loads or other applications requiring two fuses to disconnect under strain
- Fiberglass polymer body resists damage from impact
- Four "Y" type set-screw terminals accommodate a wide range of solid and stranded copper conductors
- O-ring and terminal boots form watertight seal, preventing leakage

Specifications

Part numbers	LEXT-YY-S (Solid neutral) LEX-YYC-S
Voltage Rating	600 Vac/Vdc
Ampere Rating	30 A
Interrupting Rating	200 kA with Class CC Fuses
Y Terminals	Tin Plated Copper w/ set screws
Wire Size	1 solid #12 to #8 or 1 stranded #10 to #2
Approvals	UL Recognized (File: E14721) CSA Certified (File: LR7316)

Recommended Fuses

Accepts all Littelfuse Midget and Class CC series fuses

CCMR 27
KLDR, KLKR 28
BLF, BLN, FLM, FLQ, KLK, KLKD 30

Four WPB3 insulating boots come standard with the LEXT-YY-S and LEX-YY-C-S fuse holders. Molded from non-conductive engineering grade thermoplastic to deliver a watertight seal in corrosive environments, they can be trimmed to the specific conductor size insuring a snug fit.

Web Resources

Additional technical information:
littelfuse.com/in-line

Ordering Information

ORDERING NUMBER		FUSE TYPE	LOAD TERMINAL SELECTION					LINE TERMINAL SELECTION				
			TERMINAL TYPE	LOAD TERMINAL WIRE SIZE RANGE	NUMBER OF WIRES PER TERMINAL	SOLID WIRE	STRANDED WIRE	TERMINAL TYPE	LINE TERMINAL WIRE SIZE RANGE	NUMBER OF WIRES PER TERMINAL	SOLID WIRE	STRANDED WIRE
LEXTYYS	LEXT0YYSX	Midget Class CC	"Y" type Copper Set-Screw	#12 to #8	1	•	—	"Y" type Copper Set-Screw	#12 to #8	1	•	—
				#10 to #2	1	—	•		#10 to #2	1	—	•
LEXYYCS	0LEXYYCSX	Midget Class CC	"Y" type Copper Set-Screw	#12 to #8	1	•	—	"Y" type Copper Set-Screw	#12 to #8	1	•	—
				#10 to #2	1	—	•		#10 to #2	1	—	•

© 2023 Littelfuse, Inc.

IN-LINE WATERTIGHT FUSE HOLDERS

Two-Pole Breakaway Holder

Dimensions Inches

LEX-YY-C-S

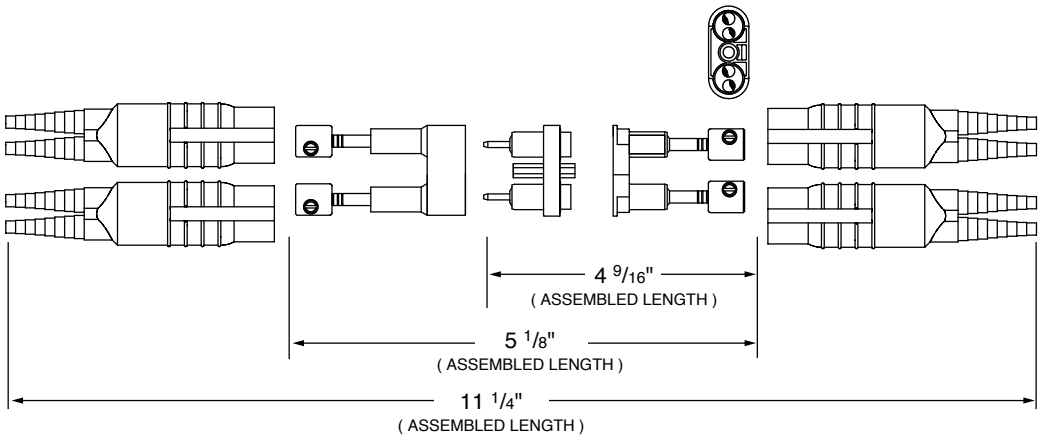

LEXT-YY-S

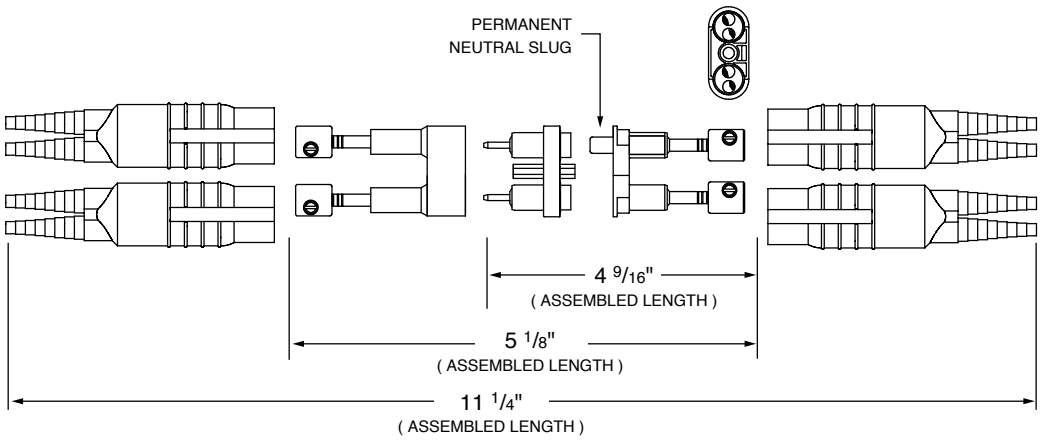

© 2023 Littelfuse, Inc.

THIS PAGE INTENTIONALLY LEFT BLANK

THIS PAGE INTENTIONALLY LEFT BLANK

 © 2023 Littelfuse, Inc.

THIS PAGE INTENTIONALLY LEFT BLANK

Section Overview

The Littelfuse switch products, designed for performance and reliability, come in a variety of voltage and amperage offerings to accommodate a range of applications. They are ideal for many markets including solar/PV, OEM, energy storage, oil and gas, railway, and uninterruptable power supply (UPS).







SWITCH PRODUCTS

Table of Contents

Dc Disconnect Switches LS7 Series (1500 V)..... 223

Dc Disconnect Switch LS6 Series (500 V) 231

Dc Disconnect Switch LS6 Series (1000 V) 235

Dc Disconnect Switch LS6R Series (1500 V)..... 239

LM3030 30 A Class J Fuse Disconnect Switches..... 243

LM3060 60 A Class J Fuse Disconnect Switches..... 248

LM3100 100 A Class J Fuse Disconnect Switches..... 253

LM 3200 200 A Class J Fuse Disconnect Switches 258

 © 2023 Littelfuse, Inc.

LS7R0250 1500 V DC SERIES

1500 V Dc • 250 A



Description

The Littelfuse LS7R dc series is an energy-efficient, compact disconnect switch that quickly breaks or resumes the flow of current safely to prevent shock hazards when trying to isolate circuits or repair systems. It is a 1500 V dc disconnect for ungrounded systems.

Features/Benefits

- The patented operation system minimizes damage caused by arcs upon disconnection to increase product reliability and longevity
- Streamline design eliminates the need for external bridging links (jumpers) to lower heat dissipation for increased energy efficiency, decreased installation and maintenance time, and reduced footprint for added design flexibility
- High-level disconnection insulation provides a barrier to stop conduction when switch is in off position for added safety
- The self-cleaning blade contacts eliminate performance degradation (from increased electrical resistance over time) to ensure consistent behavior across the product's lifespan
- The internally-located "sandwich-type" 2-contact symmetrical design mitigates the electromagnetic force of repulsion to offer enhanced functionality in short-circuit conditions
- Meets UL 94 flammability requirements with self-extinguishing/non-flammable materials to prevent fires

Applications

- Solar/PV systems: combiner boxes, recombiner boxes and inverters
- Energy storage systems: disconnection of batteries, containerized batteries
- Oil & gas: dc drives
- Railway: earthing switches and battery disconnection
- UPS: switching and isolation of batteries
- Electrical vehicle chargers

Specifications

UL 98B Standards	
Total Voltage Rating	1500 V dc
Amperage Rating	250 A
SCCR Rating	10 kA
Ambient Temperature	-20 to 50 °C (-4 to 122 °F)
IEC 60947-3 Standards	
Insulation Voltage Rating Ui	1500 V dc
Impulse Withstand Voltage Rating Uimp	12 kV
Operational Current DC21B Rating	250 A / 1500 V dc
Other Characteristics	
Power Losses at 250 A	8.26 watts
Maximum Busbar Connection Range	1 bar x 5 mm (.20") **H** x 32 mm (1.25") **L**
Number of Circuits/Switches	1
Tightening Torque	159 lbf-in (18 N•m)
Material	Plastic housing Silver-plated copper terminals
Base Mounting	Screws
Flammability Rating	UL 94 V-0
Approvals	UL 98B & UL 94 UL Guide WHVA UL Listed E511898 NEC Article 690 for PV systems IEC-60947-3 CE EAC
Environmental	RoHS compliant REACH
Country of Origin	Spain

Recommended Accessories

- **Panel Handle with Shaft LDSSA11**
  For closed panel door access
- **Direct Handle LDSSI11**
  For open panel door access
- **Auxiliary Contact LDMAU11**
  Remotely indicates switch position
- **Spacers LDMEL11**
  Increase distance between switch and mounting plate

LS7R0250 1500 V DC SERIES

Part Numbering System



Ordering Information

DC DISCONNECT SWITCH					
PART NUMBER	VOLTAGE	AMPERAGE	INSTALLATION	CONFIGURATION	SINGLE UNIT WEIGHT
LS7R02502PS00L	1500 V dc	250 A	Ungrounded	Type 2P	3 kg

Dimensions Millimeters (Inches)

Dc Disconnect Switch

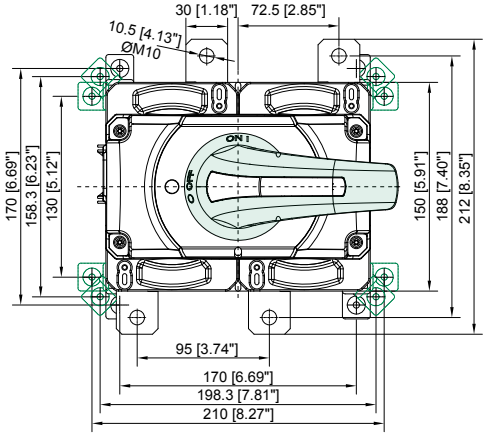

Switch - Side View

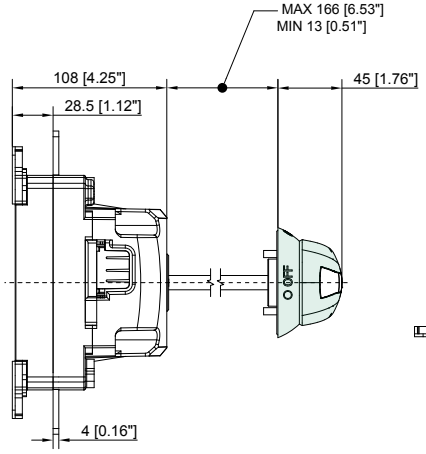

Panel Handle with Shaft

LDSSA11

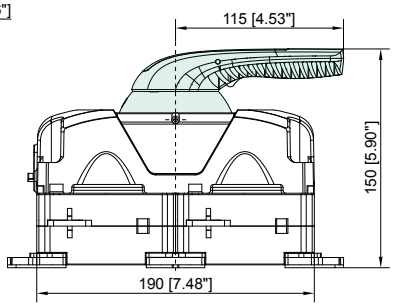

Switch - 3D Installation View

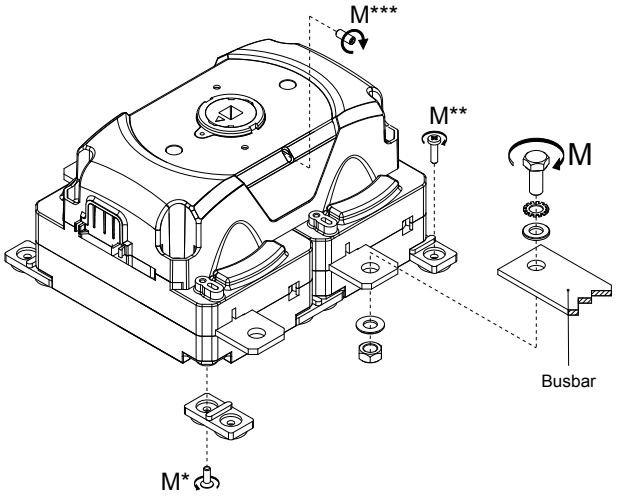

Busbar

QTY		COPPER BUSBAR M (TERMINAL TORQUE) (+5 % | -10 %)		COPPER BUSBAR H MAX (CU)		COPPER BUSBAR L MAX (CU)	
		N•M	LBF•INCH	MM	INCH	MM	INCH
1	M10	18	159	5	13/64	32	1 ¼

M		M (+5 % | -10 %)		MINIMUM BUSBAR SECTION ACCORDING TO UL 98B
		N•M	LBF•INCH	
*	T20	M4	1.2	10.6
**	—	M4	1.5	13.3
***	Allen	M5	1.5	13.3

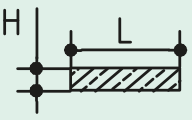

© 2023 Littelfuse, Inc.

LS7R0320 1500 V DC SERIES

1500 V Dc • 320 A



Description

The Littelfuse LS7R dc series is an energy-efficient, compact disconnect switch that quickly breaks or resumes the flow of current safely to prevent shock hazards when trying to isolate circuits or repair systems. It is a 1500 V dc disconnect for ungrounded systems.

Features/Benefits

- The patented operation system minimizes damage caused by arcs upon disconnection to increase product reliability and longevity
- Streamline design eliminates the need for external bridging links (jumpers) to lower heat dissipation for increased energy efficiency, decreased installation and maintenance time, and reduced footprint for added design flexibility
- High-level disconnection insulation provides a barrier to stop conduction when switch is in off position for added safety
- The self-cleaning blade contacts eliminate performance degradation (from increased electrical resistance over time) to ensure consistent behavior across the product's lifespan
- The internally-located "sandwich-type" 2-contact symmetrical design mitigates the electromagnetic force of repulsion to offer enhanced functionality in short-circuit conditions
- Meets UL 94 flammability requirements with self-extinguishing/non-flammable materials to prevent fires

Applications

- Solar/PV systems: combiner boxes, recombiner boxes and inverters
- Energy storage systems: disconnection of batteries, containerized batteries
- Oil & gas: dc drives
- Railway: earthing switches and battery disconnection
- UPS: switching and isolation of batteries
- Electrical vehicle chargers

Specifications

UL 98B Standards	
Total Voltage Rating	1500 V dc
Amperage Rating	320 A
SCCR Rating	10 kA
Ambient Temperature	-20 to 50 °C (-4 to 122 °F)
IEC 60947-3 Standards	
Insulation Voltage Rating Ui	1500 V dc
Impulse Withstand Voltage Rating Uimp	12 kV
Operational Current DC21B Rating	320 A / 1500 V dc
Other Characteristics	
Power Losses at 320 A	13.55 watts
Maximum Busbar Connection Range	1 bar x 5 mm (.20") **H** x 40 mm (1.58") **L**
Number of Circuits/Switches	1
Tightening Torque	159 lbf-in (18 N•m)
Material	Plastic housing Silver-plated copper terminals
Base Mounting	Screws
Flammability Rating	UL 94 V-0
Approvals	UL 98B & UL 94 UL Guide WHVA UL Listed E511898 NEC Article 690 for PV systems IEC-60947-3 CE EAC
Environmental	RoHS compliant REACH
Country of Origin	Spain

Recommended Accessories

- **Panel Handle with Shaft LDSSA11**
  For closed panel door access
- **Direct Handle LDSSI11**
  For open panel door access
- **Auxiliary Contact LDMAU11**
  Remotely indicates switch position
- **Spacers LDMEL11**
  Increase distance between switch and mounting plate

LS7R0320 1500 V DC SERIES

Part Numbering System



Ordering Information

DC DISCONNECT SWITCH					
PART NUMBER	VOLTAGE	AMPERAGE	INSTALLATION	CONFIGURATION	SINGLE UNIT WEIGHT
LS7R03202PS00L	1500 V dc	320 A	Ungrounded	Type 2P	3 kg

Dimensions Millimeters (Inches)

Dc Disconnect Switch

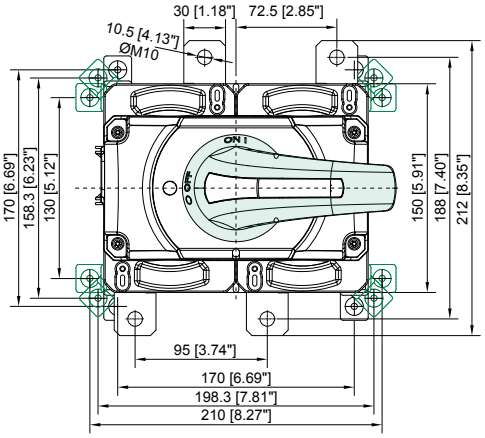

Switch - Side View

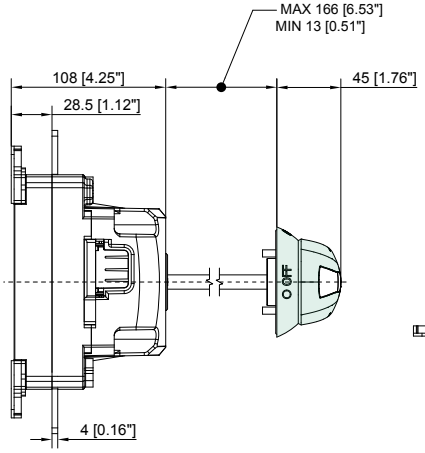

Panel Handle with Shaft

LDSSA11

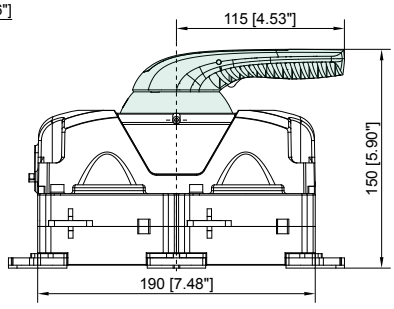

Switch - 3D Installation View

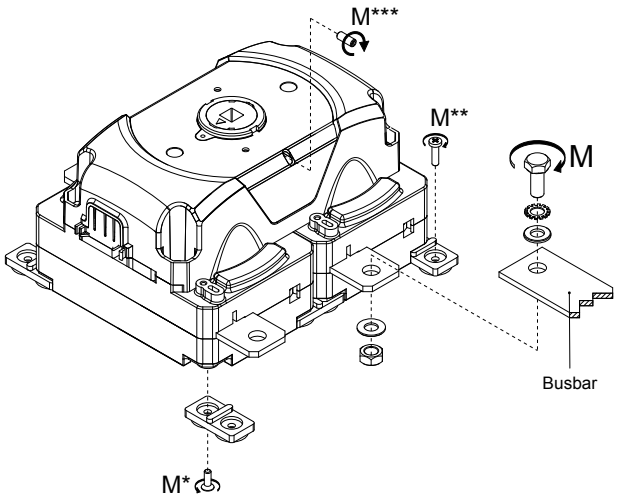

Busbar

QTY		COPPER BUSBAR M (TERMINAL TORQUE) (+5 % | -10 %)		COPPER BUSBAR H MAX (CU)		COPPER BUSBAR L MAX (CU)	
		N•M	LBF•INCH	MM	INCH	MM	INCH
1	M10	18	159	5	13/64	40	1 37/64

M			M (+5 % | -10 %)		MINIMUM BUSBAR SECTION ACCORDING TO UL 98B
			N•M	LBF•INCH	
*	T20	M4	1.2	10.6	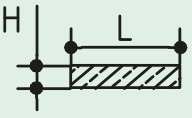
**	—	M4	1.5	13.3	
***	Allen	M5	1.5	13.3	

© 2023 Littelfuse, Inc.

LS7R0400 1500 V DC SERIES

1500 V Dc • 400 A



Description

The Littelfuse LS7R dc series is an energy-efficient, compact disconnect switch that quickly breaks or resumes the flow of current safely to prevent shock hazards when trying to isolate circuits or repair systems. It is a 1500 V dc disconnect for ungrounded systems.

Features/Benefits

- The patented operation system minimizes damage caused by arcs upon disconnection to increase product reliability and longevity
- Streamline design eliminates the need for external bridging links (jumpers) to lower heat dissipation for increased energy efficiency, decreased installation and maintenance time, and reduced footprint for added design flexibility
- High-level disconnection insulation provides a barrier to stop conduction when switch is in off position for added safety
- The self-cleaning blade contacts eliminate performance degradation (from increased electrical resistance over time) to ensure consistent behavior across the product's lifespan
- The internally-located "sandwich-type" 2-contact symmetrical design mitigates the electromagnetic force of repulsion to offer enhanced functionality in short-circuit conditions
- Meets UL 94 flammability requirements with self-extinguishing/non-flammable materials to prevent fires

Applications

- Solar/PV systems: combiner boxes, recombiner boxes and inverters
- Energy storage systems: disconnection of batteries, containerized batteries
- Oil & gas: dc drives
- Railway: earthing switches and battery disconnection
- UPS: switching and isolation of batteries
- Electrical vehicle chargers

Specifications

UL 98B Standards	
Total Voltage Rating	1500 V dc
Amperage Rating	400 A
SCCR Rating	10 kA
Ambient Temperature	-20 to 50 °C (-4 to 122 °F)
IEC 60947-3 Standards	
Insulation Voltage Rating Ui	1500 V dc
Impulse Withstand Voltage Rating Uimp	12 kV
Operational Current DC21B Rating	400 A / 1500 V dc
Other Characteristics	
Power Losses at 400 A	21.15 watts
Maximum Busbar Connection Range	2 bars x 4 mm (.16") **H** x 32 mm (1.25") **L**
Number of Circuits/Switches	1
Tightening Torque	159 lbf-in (18 N•m) for M10 screw
Material	Plastic housing Silver-plated copper terminals
Base Mounting	Screws
Flammability Rating	UL 94 V-0
Approvals	UL 98B & UL 94 UL Guide WHVA UL Listed E511898 NEC Article 690 for PV systems IEC-60947-3 CE EAC
Environmental	RoHS compliant REACH
Country of Origin	Spain

Recommended Accessories

- **Panel Handle with Shaft LDSSA11**
  For closed panel door access
- **Direct Handle LDSSI11**
  For open panel door access
- **Auxiliary Contact LDMAU11**
  Remotely indicates switch position
- **Spacers LDMEL11**
  Increase distance between switch and mounting plate

© 2023 Littelfuse, Inc.

LS7R0400 1500 V DC SERIES

Part Numbering System



Ordering Information

DC DISCONNECT SWITCH					
PART NUMBER	VOLTAGE	AMPERAGE	INSTALLATION	CONFIGURATION	SINGLE UNIT WEIGHT
LS7R04002PS00L	1500 V dc	400 A	Ungrounded	Type 2P	3 kg

Dimensions Millimeters (Inches)

Dc Disconnect Switch

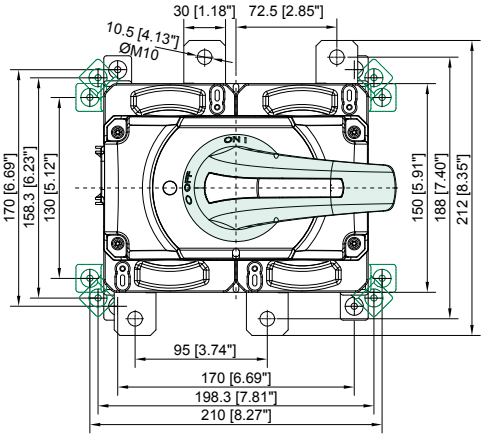

Switch - Side View

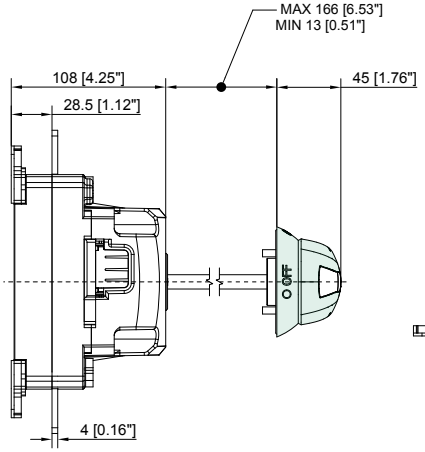

Panel Handle with Shaft

LDSSA11

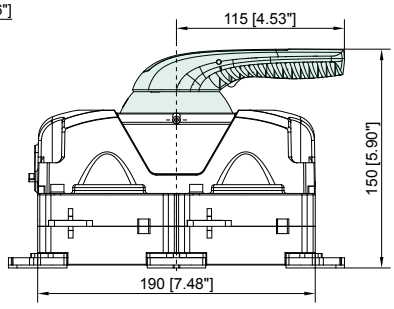

Switch - 3D Installation View

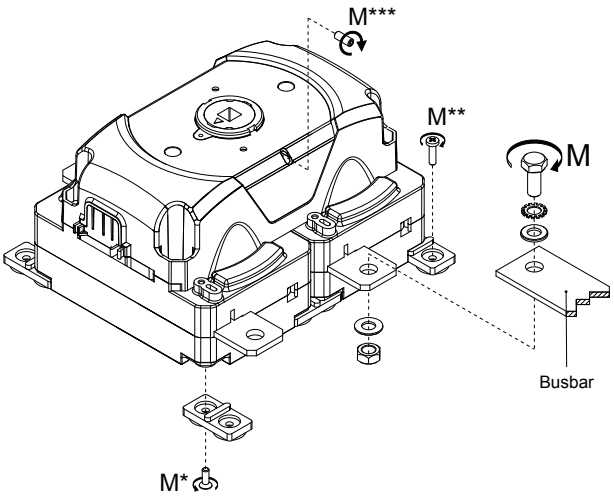

Busbar

QTY		COPPER BUSBAR M (TERMINAL TORQUE) (+5 % | -10 %)		COPPER BUSBAR H MAX (CU)		COPPER BUSBAR L MAX (CU)	
		N•M	LBF•INCH	MM	INCH	MM	INCH
2	M10	18	159	4	5/32	32	1¼

M			M (+5 % | -10 %)	
			N•M	LBF•INCH
*	T20	M4	1.2	10.6
**	—	M4	1.5	13.3
***	Allen	M5	1.5	13.3

MINIMUM BUSBAR SECTION ACCORDING TO UL 98B

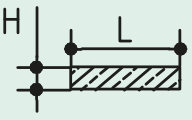

© 2023 Littelfuse, Inc.

LS7R0500 1500 V DC SERIES

1500 V Dc • 500 A

REACH EAC CE IEC UL RoHS



Description

The Littelfuse LS7R dc series is an energy-efficient, compact disconnect switch that quickly breaks or resumes the flow of current safely to prevent shock hazards when trying to isolate circuits or repair systems. It is a 1500 V dc disconnect for ungrounded systems.

Features/Benefits

- The patented operation system minimizes damage caused by arcs upon disconnection to increase product reliability and longevity
- Streamline design eliminates the need for external bridging links (jumpers) to lower heat dissipation for increased energy efficiency, decreased installation and maintenance time, and reduced footprint for added design flexibility
- High-level disconnection insulation provides a barrier to stop conduction when switch is in off position for added safety
- The self-cleaning blade contacts eliminate performance degradation (from increased electrical resistance over time) to ensure consistent behavior across the product's lifespan
- The internally-located "sandwich-type" 2-contact symmetrical design mitigates the electromagnetic force of repulsion to offer enhanced functionality in short-circuit conditions
- Meets UL 94 flammability requirements with self-extinguishing/non-flammable materials to prevent fires

Applications

- Solar/PV systems: combiner boxes, recombiner boxes and inverters
- Energy storage systems: disconnection of batteries, containerized batteries
- Oil & gas: dc drives
- Railway: earthing switches and battery disconnection
- UPS: switching and isolation of batteries
- Electrical vehicle chargers

Specifications

UL 98B Standards	
Total Voltage Rating	1500 V dc
Amperage Rating	500 A
SCCR Rating	10 kA
Ambient Temperature	-20 to 50 °C (-4 to 122 °F)
IEC 60947-3 Standards	
Insulation Voltage Rating Ui	1500 V dc
Impulse Withstand Voltage Rating Uimp	12 kV
Operational Current DC21B Rating	500 A / 1500 V dc
Other Characteristics	
Power Losses at 500 A	33.05 watts
Maximum Busbar Connection Range	2 bars x 5 mm (.20") **H** x 32 mm (1.25") **L**
Number of Circuits/Switches	1
Tightening Torque	212 lbf-in (24 N•m)
Material	Plastic housing Silver-plated copper terminals
Base Mounting	Screws
Flammability Rating	UL 94 V-0
Approvals	UL 98B & UL 94 UL Guide WHVA UL Listed E511898 NEC Article 690 for PV systems IEC-60947-3 CE EAC
Environmental	RoHS compliant REACH
Country of Origin	Spain

Recommended Accessories

- **Panel Handle with Shaft LDSSA11**
  For closed panel door access
- **Direct Handle LDSSI11**
  For open panel door access
- **Auxiliary Contact LDMAU11**
  Remotely indicates switch position
- **Spacers LDMEL11**
  Increase distance between switch and mounting plate

© 2023 Littelfuse, Inc.

LS7R0500 1500 V DC SERIES

Part Numbering System



Ordering Information

DC DISCONNECT SWITCH					
PART NUMBER	VOLTAGE	AMPERAGE	INSTALLATION	CONFIGURATION	SINGLE UNIT WEIGHT
LS7R05002PS00L	1500 V dc	500 A	Ungrounded	Type 2P	3 kg

Dimensions Millimeters (Inches)

Dc Disconnect Switch

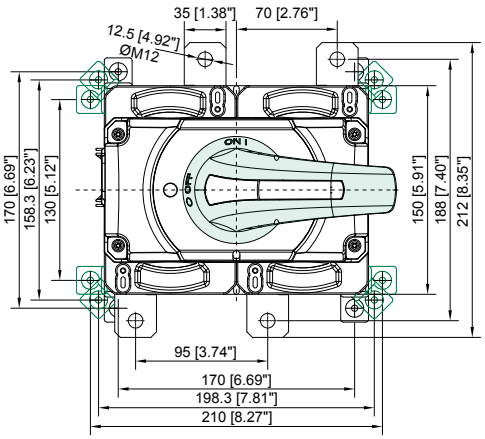

Switch - Side View

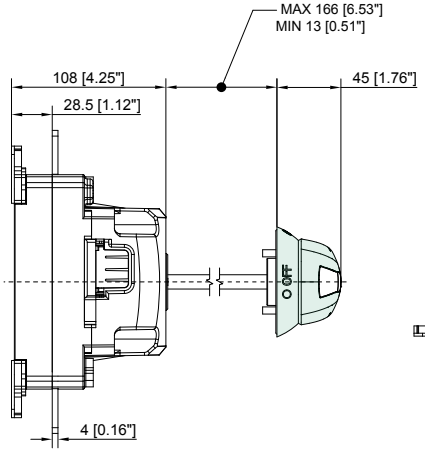

Panel Handle with Shaft

LDSSA11

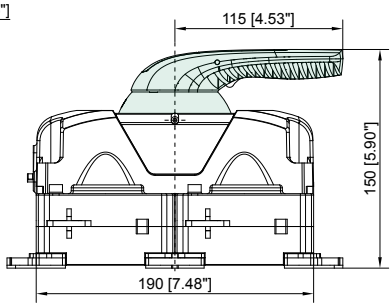

Switch - 3D Installation View

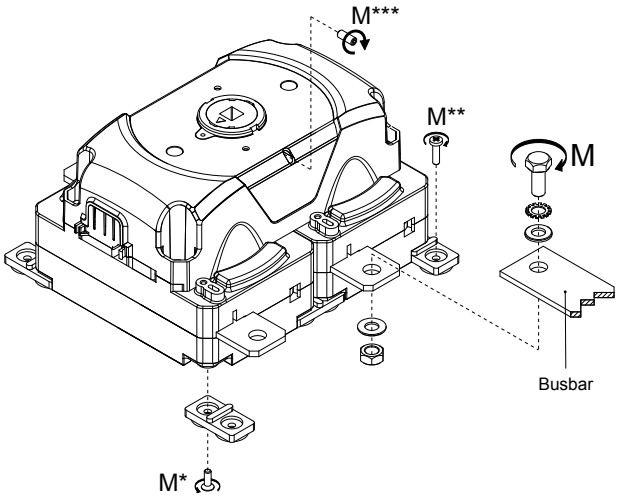

Busbar

QTY		COPPER BUSBAR M (TERMINAL TORQUE) (+5 % | -10 %)		COPPER BUSBAR H MAX (CU)		COPPER BUSBAR L MAX (CU)	
		N•M	LBF•INCH	MM	INCH	MM	INCH
2	M12	24	212	5	13/64	32	1¼

M			M (+5 % | -10 %)	
			N•M	LBF•INCH
*	T20	M4	1.2	10.6
**	—	M4	1.5	13.3
***	Allen	M5	1.5	13.3

MINIMUM BUSBAR SECTION ACCORDING TO UL 98B

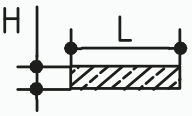

© 2023 Littelfuse, Inc.

LS60250 500 V DC SERIES

500 V Dc • 250 A

REACH EAC CE IEC UL RoHS



Type 2L
Dc Ungrounded



Type 1V
Dc Grounded with Handle Attached

SOLAR-RATED

Description

The Littelfuse LS6 dc series is an energy-efficient, compact disconnect switch that quickly breaks or resumes the flow of current safely to prevent shock hazards when trying to isolate circuits or repair systems.

Features/Benefits

- Streamline design eliminates the need for external bridging links (jumpers) to lower heat dissipation for increased energy efficiency, decreased installation and maintenance time, and reduced footprint for added design flexibility
- High-level disconnection insulation provides a barrier to stop conduction when switch is in off position for added safety
- The self-cleaning blade contacts eliminate performance degradation (from increased electrical resistance over time) to ensure consistent behavior across the product's lifespan
- The internally-located "sandwich-type" 2-contact symmetrical design mitigates the electromagnetic force of repulsion to offer enhanced functionality in short-circuit conditions
- Meets UL 94 flammability requirements with self-extinguishing/non-flammable materials to prevent fires

Applications

- Solar/PV systems: combiner boxes, recombiner boxes and inverters
- Energy storage systems: disconnection of batteries, containerized batteries
- Oil & gas: dc drives
- Railway: earthing switches and battery disconnection
- UPS: switching and isolation of batteries
- Electrical vehicle chargers

Specifications

UL 98B Standards	
Total Voltage Rating	500 V dc
Amperage Rating	250 A
SCCR Rating	10 kA
Ambient Temperature	-20 to 50 °C (-4 to 122 °F)
IEC 60947-3 Standards	
Insulation Voltage Rating Ui	1500 V dc
Impulse Withstand Voltage Rating Uimp	12 kV
Operational Current DC21B Rating	250 A/500 V dc
Other Characteristics	
Power Losses at 250 A	10.08 watts
Minimum Connection Wire Range/AWG	400 kcmil/MCM (203 mm^2)
Maximum Connection Wire Range/AWG	500 kcmil/MCM (253 mm^2)
Number of Circuits/Switches	1
Mechanical Operations	8,000
Tightening Torque	159 lbf-in (18 N•m)
Material	Plastic housing Silver-plated copper terminals
Base Mounting	Screws
Flammability Rating	UL 94 V-0
Approvals	UL 98B & UL 94 UL Guide WHVA UL Listed E511898 NEC Article 690 for PV systems IEC-60947-3 CE EAC
Environmental	RoHS compliant REACH
Country of Origin	Spain

Recommended Accessories

- **Panel handle with shaft LDSSA11** for closed panel door access
- **Direct handle LDSSI11** for open panel door access
- **Auxiliary contacts LD5LAU01** remotely indicate switch position
- **Phase barriers LDRSF11 (Type 1V) and LDRSF12 (Type 2L)** isolate sections to eliminate arcing between the phases
- **Terminal lug LDRTL11W** safely connects electrical and mechanical devices (phase barriers must be used in order to maintain the required clearance)
- **Terminal shrouds LDRCU11W** offer protection against direct contact after wiring
- **Spacers LDREL11W** increase distance between switch and mounting plate

© 2023 Littelfuse, Inc.

LS60250 500 V DC SERIES

Part Numbering System

LS6 0250 1V S 00L

- LS6 — Series
- 0250 — Amperage
- 1V — Configuration Type
- S — Terminal Measurement
- 00L — UL product

1V = 1 Pole
2L = 2 Pole

Configuration

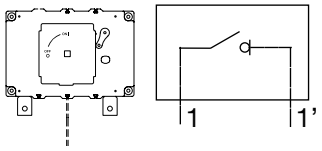

Type 1V (1 Pole)

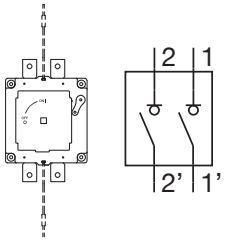

Type 2L (2 Pole)

Ordering Information

DC DISCONNECT SWITCH						
SERIES	TOTAL VOLTAGE	AMPERAGE	INSTALLATION	CONFIGURATION	POLES	SINGLE UNIT WEIGHT
LS602501VS00L	500 V dc	250 A	Grounded	Type 1V	1	2 kg
LS602502LS00L	500 V dc	250 A	Ungrounded	Type 2L	2	3 kg

Dimensions Millimeters

Dc Disconnect Switch

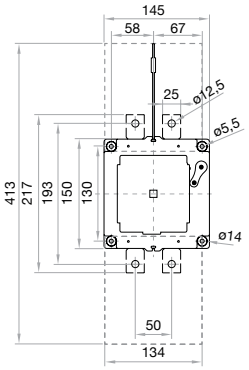

Switch + Direct Handle - Side View

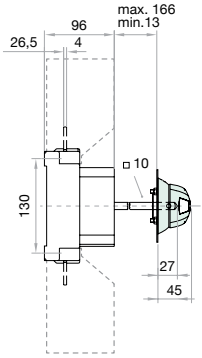

Panel Handle with Shaft

LDSSA11

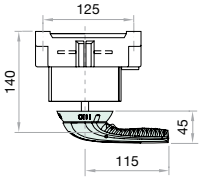

Auxiliary Contact

LD5AU01

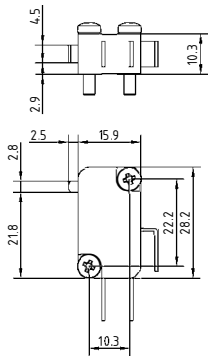

Terminal Lug Measurements

LDRTL11W				
3/0 85 MM² MIN --- 400 KCMIL 240 MM² MAX	CONDUCTOR TEMPERATURE RATING		COPPER WIRE ONLY M (TERMINAL TORQUE) (+5% | -10%)	
			N•M	LB.INCH
	75 °C	M10	18	159

Torque and Cable Capacity Instructions

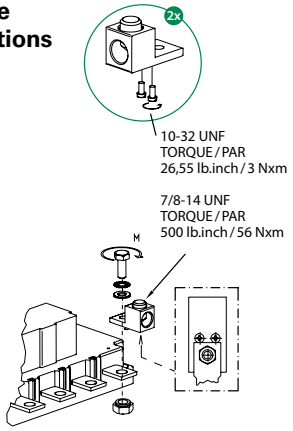

© 2023 Littelfuse, Inc.

LS60400 500 V DC SERIES

500 V dc • 400 A • 1 Pole
500 V dc • 400 A • 2 Pole (250 V dc per pole)

REACH EAC CE IEC UL RoHS



2 Pole (Type 2L)
Dc Ungrounded



1 Pole (Type 1V)
Dc Grounded with Handle Attached

SOLAR-RATED

Description

The Littelfuse LS6 dc series is an energy-efficient, compact disconnect switch that quickly breaks or resumes the flow of current safely to prevent shock hazards when trying to isolate circuits or repair systems.

Features/Benefits

- Streamline design eliminates the need for external bridging links (jumpers) to lower heat dissipation for increased energy efficiency, decreased installation and maintenance time, and reduced footprint for added design flexibility
- High-level disconnection insulation provides a barrier to stop conduction when switch is in off position for added safety
- The self-cleaning blade contacts eliminate performance degradation (from increased electrical resistance over time) to ensure consistent behavior across the product's lifespan
- The internally-located "sandwich-type" 2-contact symmetrical design mitigates the electromagnetic force of repulsion to offer enhanced functionality in short-circuit conditions
- Meets UL 94 flammability requirements with self-extinguishing/non-flammable materials to prevent fires

Applications

- Solar/PV systems: combiner boxes, recombiner boxes and inverters
- Energy storage systems: disconnection of batteries, containerized batteries
- Oil & gas: dc drives
- Railway: earthing switches and battery disconnection
- UPS: switching and isolation of batteries

Web Resources

For more information, visit:
littelfuse.com/DcDisconnectSwitch

Specifications

UL 98B Standards	
Total Voltage Rating	500 V dc
Amperage Rating	400 A
SCCR Rating	10 kA
Ambient Temperature	-20 to 50 °C (-4 to 122 °F)
IEC 60947-3 Standards	
Insulation Voltage Rating Ui	1500 V dc
Impulse Withstand Voltage Rating Uimp	12 kV
Operational Current DC21B Rating	400 A / 500 V dc
Other Characteristics	
Power Losses at 400 A	2 Pole (2L): 9.2 watts/pole 1 Pole (1V): 18.4 watts total
Minimum Connection Wire Range / AWG	300 kcmil/MCM (152 mm^2)
Maximum Connection Wire Range / AWG	350 kcmil/MCM (177 mm^2)
Number of Circuits/Switches	1
Mechanical Operations	8,000
Tightening Torque	212 lbf-in (24 N•m)
Material	Plastic housing Silver-plated copper terminals
Base Mounting	Screws
Flammability Rating	UL 94 V-0
Approvals	UL 98B & UL 94 UL Guide WHVA UL Listed E511898 NEC Article 690 for PV systems IEC-60947-3 CE EAC
Environmental	RoHS compliant REACH
Country of Origin	Spain

Recommended Accessories

- **Panel handle with shaft LDSLA21** for closed panel door access
- **Direct handle LDSLI21** for open panel door access
- **Auxiliary contacts LD5LAU01** remotely indicate switch position
- **Phase barriers LDRSF21 (Type 1V) and LDRSF22 (Type 2L)** isolate sections to eliminate arcing between the phases
- **Terminal lug LDRTL22W** safely connects electrical and mechanical devices (phase barriers must be used in order to maintain the required clearance)
- **Terminal shrouds LDRCU21W** offer protection against direct contact after wiring
- **Spacers LREL21W** increase distance between switch and mounting plate

© 2023 Littelfuse, Inc.

LS60400 500 V DC SERIES

Part Numbering System

LS6 0400 1V S 00L

- Series: LS6
- Amperage: 0400
- Configuration Type: 1V
  - 1V = 1 Pole
  - 2L = 2 Pole
- Terminal Measurement: S
- UL product: 00L

Configuration

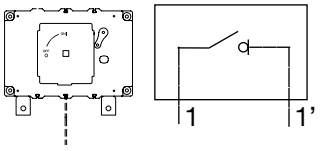

Type 1V (1 Pole)

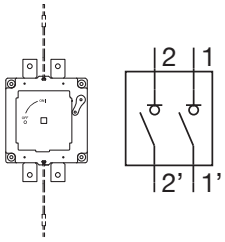

Type 2L (2 Pole)

Ordering Information

DC DISCONNECT SWITCH						
SERIES	TOTAL VOLTAGE	AMPERAGE	INSTALLATION	CONFIGURATION	POLES	SINGLE UNIT WEIGHT
LS604001VS00L	500 V dc	400 A	Grounded	Type 1V	1	2 kg
LS604002LS00L	500 V dc	400 A	Ungrounded	Type 2L	2	3 kg

Dimensions Millimeters

Dc Disconnect Switch

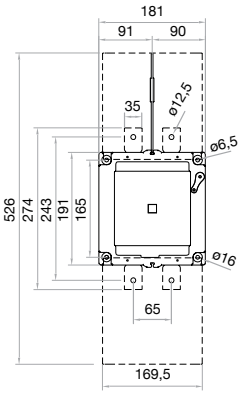

Switch + Direct Handle - Side View

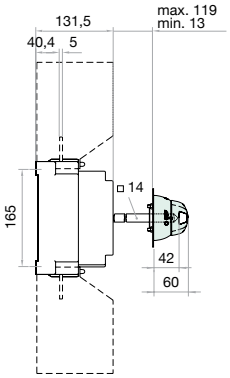

Panel Handle with Shaft

LDSLA21

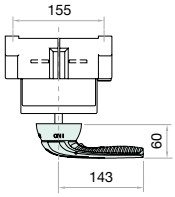

Auxiliary Contact

LD5AU01

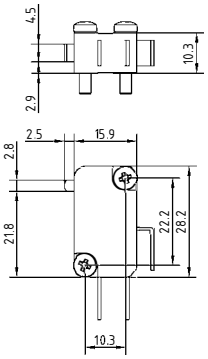

Terminal Lug Measurements

LDRTL22W				
16 MM² MIN --- 350 KCMIL 185 MM² MAX	CONDUCTOR TEMPERATURE RATING		COPPER WIRE ONLY M (TERMINAL TORQUE) (+5% | -10%)	
			N•M	LB.INCH
	75 °C	M10	24	212

Torque and Cable Capacity Instructions

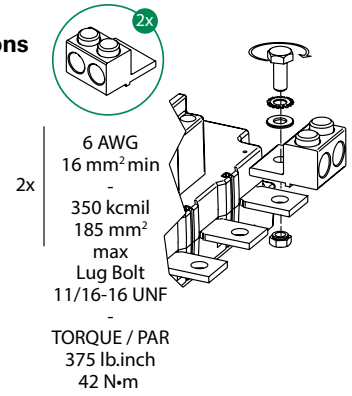

© 2023 Littelfuse, Inc.

LS60250 1000 V DC SERIES

1000 V Dc • 250 A

REACH EAC CE IEC UL RoHS



Type 2E
Dc Ungrounded



Type 1M
Dc Grounded with Handle Attached

SOLAR-RATED

Description

The Littelfuse LS6 dc series is an energy-efficient, compact disconnect switch that quickly breaks or resumes the flow of current safely to prevent shock hazards when trying to isolate circuits or repair systems.

Features/Benefits

- Streamline design eliminates the need for external bridging links (jumpers) to lower heat dissipation for increased energy efficiency, decreased installation and maintenance time, and reduced footprint for added design flexibility
- High-level disconnection insulation provides a barrier to stop conduction when switch is in off position for added safety
- The self-cleaning blade contacts eliminate performance degradation (from increased electrical resistance over time) to ensure consistent behavior across the product's lifespan
- The internally-located "sandwich-type" 2-contact symmetrical design mitigates the electromagnetic force of repulsion to offer enhanced functionality in short-circuit conditions
- Meets UL 94 flammability requirements with self-extinguishing/non-flammable materials to prevent fires

Applications

- Solar/PV systems: combiner boxes, recombiner boxes and inverters
- Energy storage systems: disconnection of batteries, containerized batteries
- Oil & gas: dc drives
- Railway: earthing switches and battery disconnection
- UPS: switching and isolation of batteries
- Electrical vehicle chargers

Specifications

UL 98B Standards	
Total Voltage Rating	1000 V dc
Amperage Rating	250 A
SCCR Rating	10 kA
Ambient Temperature	-20 to 50 °C (-4 to 122 °F)
IEC 60947-3 Standards	
Insulation Voltage Rating Ui	1500 V dc
Impulse Withstand Voltage Rating Uimp	12 kV
Operational Current DC21B Rating	250 A/1000 V dc
Other Characteristics	
Power Losses at 250 A	19.59 watts
Minimum Connection Wire Range/AWG	400 kcmil/MCM (203 mm^2)
Maximum Connection Wire Range/AWG	500 kcmil/MCM (253 mm^2)
Number of Circuits/Switches	1
Mechanical Operations	8,000
Tightening Torque	159 lbf-in (18 N•m)
Material	Plastic housing Silver-plated copper terminals
Base Mounting	Screws
Flammability Rating	UL 94 V-0
Approvals	UL 98B & UL 94 UL Guide WHVA UL Listed E511898 NEC Article 690 for PV systems IEC-60947-3 CE EAC
Environmental	RoHS compliant REACH
Country of Origin	Spain

Recommended Accessories

- **Panel handle with shaft LDSSA11** for closed panel door access
- **Direct handle LDSSI11** for open panel door access
- **Auxiliary contacts LD5LAU01** remotely indicate switch position
- **Phase barriers LDRSF11 (Type 1M) and LDRSF13 (Type 2E)** isolate sections to eliminate arcing between the phases
- **Terminal lug LDRTL11W** safely connects electrical and mechanical devices (phase barriers must be used in order to maintain the required clearance)
- **Terminal shrouds LDRCU13W** offer protection against direct contact after wiring
- **Spacers LDREL11W** increase distance between switch and mounting plate

© 2023 Littelfuse, Inc.

LS60250 1000 V DC SERIES

Part Numbering System

LS6 0250 1M S 00L

- **Series** — LS6
- **Amperage** — 0250
- **Configuration Type** — 1M
  - 1M = 1 Pole
  - 2E = 2 Pole
- **Terminal Measurement** — S
- **UL product** — 00L

Configuration

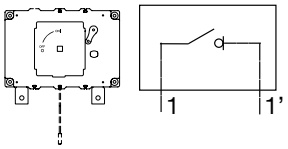

1M (1 Pole)

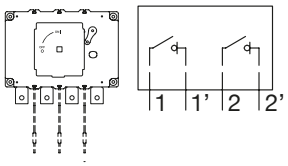

2E (2 Pole)

Ordering Information

DC DISCONNECT SWITCH						
SERIES	TOTAL VOLTAGE	AMPERAGE	INSTALLATION	CONFIGURATION	POLES	SINGLE UNIT WEIGHT
LS602501MS00L	1000 V dc	250 A	Grounded	Type 1M	1	2 kg
LS602502ES00L	1000 V dc	250 A	Ungrounded	Type 2E	2	3 kg

Dimensions Millimeters

Dc Disconnect Switch

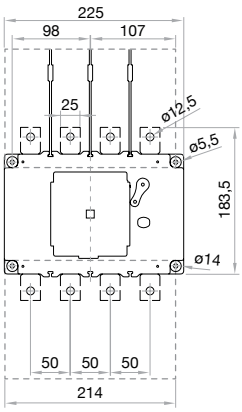

Switch + Direct Handle - Side View

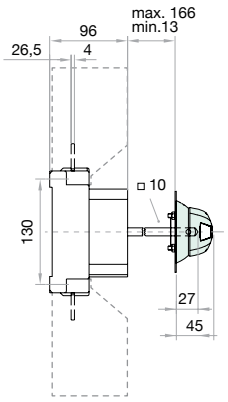

Panel Handle with Shaft

LDSSA11

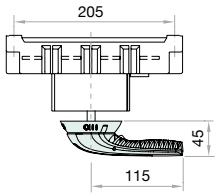

Auxiliary Contact

LD5AU01

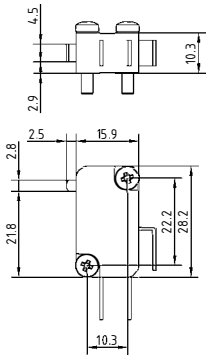

Terminal Lug Measurements

LDRTL11W				
3/0 85 MM² MIN. --- 400 KCMIL 240 MM² MAX.	CONDUCTOR TEMPERATURE RATING		COPPER WIRE ONLY M (TERMINAL TORQUE) (+5% | -10%)	
			N•M	LB.INCH
	75 °C	M10	18	159

Torque and Cable Capacity Instructions

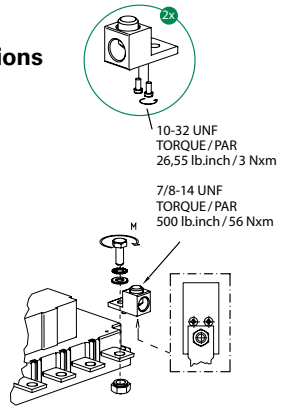

© 2023 Littelfuse, Inc.

LS60400 1000 V DC SERIES

1000 V dc • 400 A • 1 Pole
1000 V dc • 400 A • 2 Pole (500 V dc per pole)



2 Pole (Type 2E)
Dc Ungrounded



1 Pole (Type 1M)
Dc Grounded with Handle Attached

Description

The Littelfuse LS6 dc series is an energy-efficient, compact disconnect switch that quickly breaks or resumes the flow of current safely to prevent shock hazards when trying to isolate circuits or repair systems.

Features/Benefits

- Streamline design eliminates the need for external bridging links (jumpers) to lower heat dissipation for increased energy efficiency, decreased installation and maintenance time, and reduced footprint for added design flexibility
- High-level disconnection insulation provides a barrier to stop conduction when switch is in off position for added safety
- The self-cleaning blade contacts eliminate performance degradation (from increased electrical resistance over time) to ensure consistent behavior across the product's lifespan
- The internally-located "sandwich-type" 2-contact symmetrical design mitigates the electromagnetic force of repulsion to offer enhanced functionality in short-circuit conditions
- Meets UL 94 flammability requirements with self-extinguishing/non-flammable materials to prevent fires

Applications

- Solar/PV systems: combiner boxes, recombiner boxes and inverters
- Energy storage systems: disconnection of batteries, containerized batteries
- Oil & gas: dc drives
- Railway: earthing switches and battery disconnection
- UPS: switching and isolation of batteries

Web Resources

For more information, visit:
littelfuse.com/DcDisconnectSwitch

Specifications

UL 98B Standards	
Total Voltage Rating	1000 V dc
Amperage Rating	400 A
SCCR Rating	10 kA
Ambient Temperature	-20 to 50 °C (-4 to 122 °F)
IEC 60947-3 Standards	
Insulation Voltage Rating Ui	1500 V dc
Impulse Withstand Voltage Rating Uimp	12 kV
Operational Current DC21B Rating	400 A/1000 V dc
Other Characteristics	
Power Losses at 400 A	2 Pole (2E): 18.4 watts/pole 1 Pole (1M): 36.11 watts total
Minimum Connection Wire Range / AWG	300 kcmil/MCM (152 mm^2)
Maximum Connection Wire Range / AWG	350 kcmil/MCM (177 mm^2)
Number of Circuits/Switches	1
Mechanical Operations	8,000
Tightening Torque	212 lbf-in (24 N•m)
Material	Plastic housing Silver-plated copper terminals
Base Mounting	Screws
Flammability Rating	UL 94 V-0
Approvals	UL 98B & UL 94 UL Guide WHVA UL Listed E511898 NEC Article 690 for PV systems IEC-60947-3 CE EAC
Environmental	RoHS compliant REACH
Country of Origin	Spain

Recommended Accessories

- Panel handle with shaft LDSLA21 for closed panel door access
- Direct handle LDSLI21 for open panel door access
- Auxiliary contacts LD5LAU01 remotely indicate s witch position
- Phase barriers LDRSF21 (Type 1M) and LDRSF23 (Type 2E) isolate sections to eliminate arcing between the phases
- Terminal lug LDRTL22W safely connects electrical and mechanical devices (phase barriers must be used in order to maintain the required clearance)
- Terminal shrouds LDRCU23W offer protection against direct contact after wiring
- Spacers LDREL21W increase distance between switch and mounting plate

© 2023 Littelfuse, Inc.

LS60400 1000 V DC SERIES

Part Numbering System

LS6 0400 1M S 00L

- **Series** — LS6
- **Amperage** — 0400
- **Configuration Type** — 1M
  - 1M = 1 Pole
  - 2E = 2 Pole
- **Terminal Measurement** — S
- **UL product** — 00L

Configuration

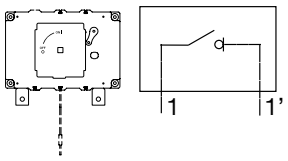

Type 1M (1 Pole)

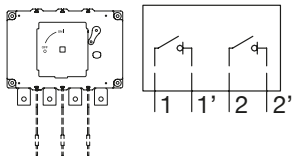

Type 2E (2 Pole)

Ordering Information

DC DISCONNECT SWITCH						
SERIES	TOTAL VOLTAGE	AMPERAGE	INSTALLATION	CONFIGURATION	POLES	SINGLE UNIT WEIGHT
LS604001MS00L	1000 V dc	400 A	Grounded	Type 1M	1	2 kg
LS604002ES00L	1000 V dc	400 A	Ungrounded	Type 2E	2	3 kg

Dimensions Millimeters

Dc Disconnect Switch

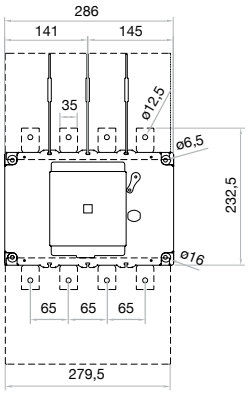

Switch + Direct Handle - Side View

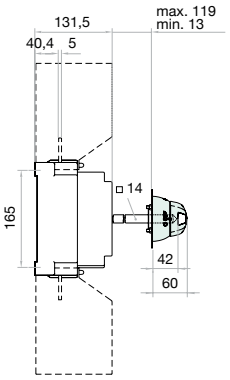

Panel Handle with Shaft

LDSLA21

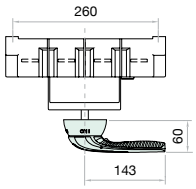

Auxiliary Contact

LD5AU01

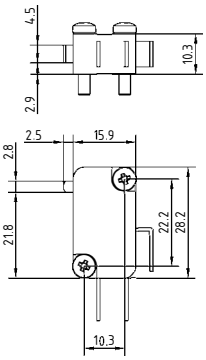

Terminal Lug Measurements

LDRTL22W				
3/0 85 MM² MIN. --- 400 KCMIL 240 MM² MAX.	CONDUCTOR TEMPERATURE RATING		COPPER WIRE ONLY M (TERMINAL TORQUE) (+5% | -10%)	
			N•M	LB.INCH
	75 °C	M10	24	212

Torque and Cable Capacity Instructions

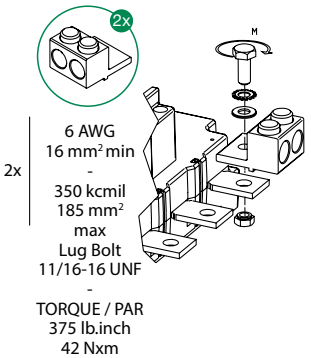

© 2023 Littelfuse, Inc.

LS6R0250 1500 V DC SERIES

1500 V Dc • 250 A



Type CB
Dc Ungrounded



Type 4D
Dc Grounded with handle attached

Description

The Littelfuse LS6R dc series is an energy-efficient, compact disconnect switch that quickly breaks or resumes the flow of current safely to prevent shock hazards when trying to isolate circuits or repair systems.

Features/Benefits

- The patented operation system minimizes damage caused by arcs upon disconnection to increase product reliability and longevity
- Streamline design eliminates the need for external bridging links (jumpers) to lower heat dissipation for increased energy efficiency, decreased installation and maintenance time, and reduced footprint for added design flexibility
- High-level disconnection insulation provides a barrier to stop conduction when switch is in off position for added safety
- The self-cleaning blade contacts eliminate performance degradation (from increased electrical resistance over time) to ensure consistent behavior across the product's lifespan
- The internally-located "sandwich-type" 2-contact symmetrical design mitigates the electromagnetic force of repulsion to offer enhanced functionality in short-circuit conditions
- Meets UL 94 flammability requirements with self-extinguishing/non-flammable materials to prevent fires

Applications

- Solar/PV systems: combiner boxes, recombiner boxes and inverters
- Energy storage systems: disconnection of batteries, containerized batteries
- Oil & gas: dc drives
- Railway: earthing switches and battery disconnection
- UPS: switching and isolation of batteries
- Electrical vehicle chargers

Specifications

UL 98B Standards	
Total Voltage Rating	1500 V dc
Amperage Rating	250 A
SCCR Rating	10 kA
Ambient Temperature	-20 to 50 °C (-4 to 122 °F)
IEC 60947-3 Standards	
Insulation Voltage Rating Ui	1500 V dc
Impulse Withstand Voltage Rating Uimp	12 kV
Operational Current DC21B Rating	250 A/1500 V dc
Other Characteristics	
Power Losses at 250 A	4.13 watts
Maximum Busbar Connection Range	2 bars x 4 mm (.16") **H** x 30 mm (1.18") **L**
Number of Circuits/Switches	1
Mechanical Operations	8,000
Tightening Torque	212 lbf-in (24 N•m)
Material	Plastic housing Silver-plated copper terminals
Base Mounting	Screws
Flammability Rating	UL 94 V-0
Approvals	UL 98B & UL 94 UL Guide WHVA UL Listed E511898 NEC Article 690 for PV systems IEC-60947-3 CE EAC
Environmental	RoHS compliant REACH
Country of Origin	Spain

Recommended Accessories

- **Panel Handle with Shaft LDSSA11**
  For closed panel door access
- **Direct Handle LDSSI11**
  For open panel door access
- **Auxiliary Contact LD5LAU01**
  Remotely indicates switch position

© 2023 Littelfuse, Inc.

LS6R0250 1500 V DC SERIES

Part Numbering System

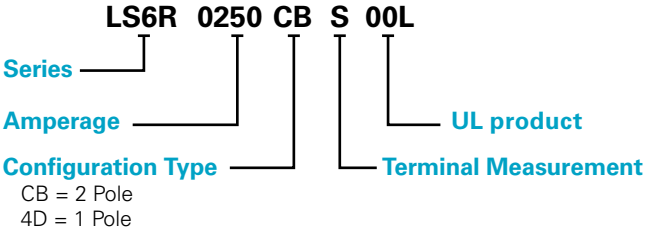

Configuration

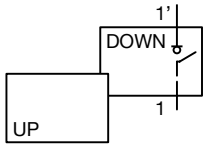

Type 4D (1 Pole)

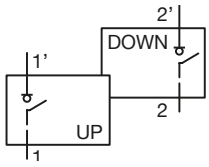

Type CB (2 Pole)

Ordering Information

DC DISCONNECT SWITCH						
SERIES	TOTAL VOLTAGE	AMPERAGE	INSTALLATION	CONFIGURATION	POLES	SINGLE UNIT WEIGHT
LS6R02504DS00L	1500 V dc	250 A	Grounded	Type 4D	1	4.5 kg
LS6R0250CBS00L	1500 V dc	250 A	Ungrounded	Type CB	2	4.5 kg

Dimensions Millimeters

Dc Disconnect Switch

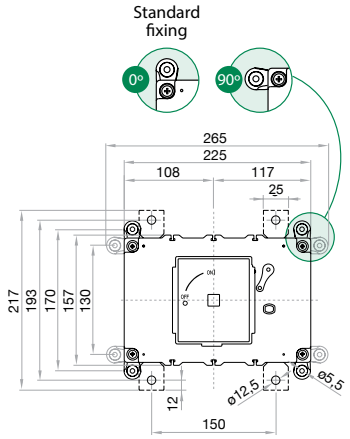

Switch - Side View

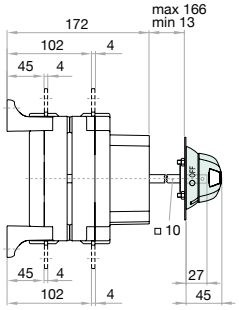

Panel Handle with Shaft

LDSSA11

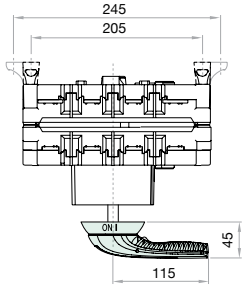

Busbar

BUSBAR H MAX (CU)		BUSBAR L MAX (CU)			COPPER BAR M (TERMINAL TORQUE) (+5 % | -10 %)	
MM	INCH	MM	INCH		N•M	LB.INCH
4	5/32	36	1 3/16	M12	24	212

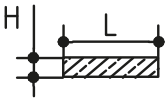

Auxiliary Contact

LD5AU01

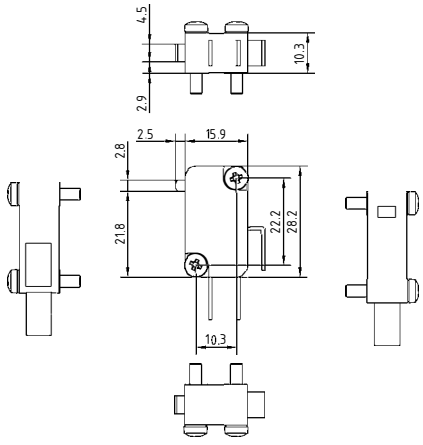

© 2023 Littelfuse, Inc.

LS6R0400 1500 V DC SERIES

1500 V Dc • 400 A



Type CB
Dc Ungrounded



Type 4D
Dc Grounded with handle attached

Description

The Littelfuse LS6R dc series is an energy-efficient, compact disconnect switch that quickly breaks or resumes the flow of current safely to prevent shock hazards when trying to isolate circuits or repair systems.

Features/Benefits

- The patented operation system minimizes damage caused by arcs upon disconnection to increase product reliability and longevity
- Streamline design eliminates the need for external bridging links (jumpers) to lower heat dissipation for increased energy efficiency, decreased installation and maintenance time, and reduced footprint for added design flexibility
- High-level disconnection insulation provides a barrier to stop conduction when switch is in off position for added safety
- The self-cleaning blade contacts eliminate performance degradation (from increased electrical resistance over time) to ensure consistent behavior across the product's lifespan
- The internally-located "sandwich-type" 2-contact symmetrical design mitigates the electromagnetic force of repulsion to offer enhanced functionality in short-circuit conditions
- Meets UL 94 flammability requirements with self-extinguishing/non-flammable materials to prevent fires

Applications

- Solar/PV systems: combiner boxes, recombiner boxes and inverters
- Energy storage systems: disconnection of batteries, containerized batteries
- Oil & gas: dc drives
- Railway: earthing switches and battery disconnection
- UPS: switching and isolation of batteries
- Electrical vehicle chargers

Specifications

UL 98B Standards	
Total Voltage Rating	1500 V dc
Amperage Rating	400 A
SCCR Rating	10 kA
Ambient Temperature	-30 to 50 °C (-22 to 122 °F)
IEC 60947-3 Standards	
Insulation Voltage Rating Ui	1500 V dc
Impulse Withstand Voltage Rating Uimp	12 kV
Operational Current DC21B Rating	400 A/1500 V dc
Other Characteristics	
Power Losses at 400 A	10.58 watts
Maximum Busbar Connection Range	2 bars x 4 mm (.16") **H** x 32 mm (1.26") **L**
Number of Circuits/Switches	1
Mechanical Operations	8,000
Tightening Torque	212 lbf-in (24 N•m)
Material	Plastic housing Silver-plated copper terminals
Base Mounting	Screws
Flammability Rating	UL 94 V-0
Approvals	UL 98B & UL 94 UL Guide WHVA UL Listed E511898 NEC Article 690 for PV systems IEC-60947-3 CE EAC
Environmental	RoHS compliant REACH
Country of Origin	Spain

Recommended Accessories

- **Panel Handle with Shaft LDSSA11**
  For closed panel door access
- **Direct Handle LDSSI11**
  For open panel door access
- **Auxiliary Contact LD5LAU01**
  Remotely indicates switch position

© 2023 Littelfuse, Inc.

LS6R0400 1500 V DC SERIES

Part Numbering System

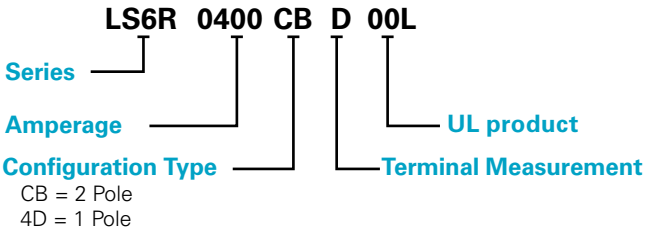

Configuration

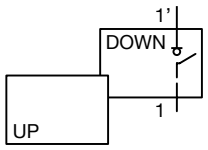

Type 4D (1 Pole)

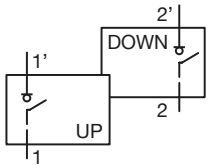

Type CB (2 Pole)

Ordering Information

DC DISCONNECT SWITCH						
SERIES	TOTAL VOLTAGE	AMPERAGE	INSTALLATION	CONFIGURATION	POLES	SINGLE UNIT WEIGHT
LS6R04004DD00L	1500 V dc	400 A	Grounded	Type 4D	1	4.5 kg
LS6R0400CBD00L	1500 V dc	400 A	Ungrounded	Type CB	2	4.5 kg

Dimensions Millimeters

Dc Disconnect Switch

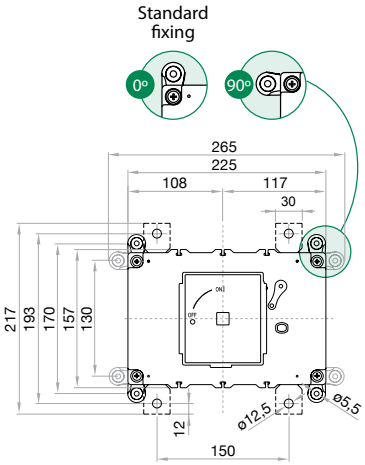

Switch - Side View

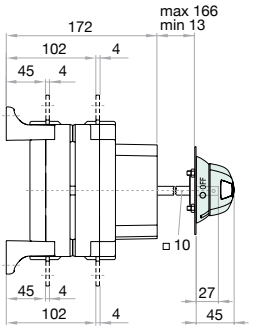

Panel Handle with Shaft

LDSSA11

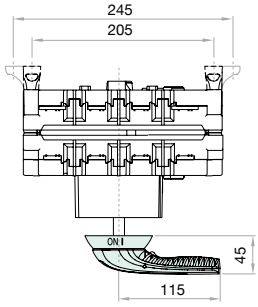

Busbar

BUSBAR H MAX (CU)		BUSBAR L MAX (CU)			COPPER BAR M (TERMINAL TORQUE) (+5 % | -10 %)	
MM	INCH	MM	INCH		N•M	LB.INCH
4	5/32	32	1¼	M12	24	212

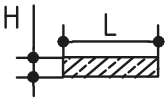

Auxiliary Contact

LD5AU01

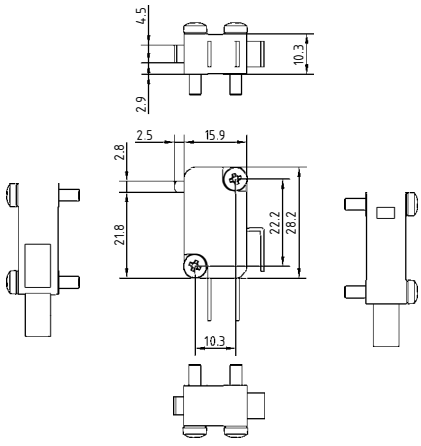

© 2023 Littelfuse, Inc.

LM3030 SERIES CL ASS J FUSE DISCONNECT SWITCH

30 A

REACH RoHS CE cULus



*Handle and fuses sold separately

Description

The Class J Fuse Disconnect Switch combines a switch and multiple fuses in a single, compact device. This switch, with both front or side operation, offers a simpler way to manually open and close a circuit while safeguarding against overcurrent and short circuits. When it detects an overload or short circuit, the fuse blows automatically to open or break the circuit both upstream and downstream and shuts off the equipment.

When installing or maintaining equipment, the Class J Fuse Disconnect Switch makes it easier to connect or disconnect the power in an isolated area. With a higher interrupting rating, it delivers more robust protection, increases personnel safety and offers a longer switch life.

Features & Benefits

FEATURES	BENEFITS
Fuse isolation	Makes it easy to segregate a particular fuse on the circuit for safe repair or maintenance
Double break contact system	Breaks circuit upstream and downstream enabling the switch to handle higher voltages and provide a longer switch life
Small footprint	Saves space and provides design flexibility
Optional handles (direct handle with push-to-detach system or external handle with shaft) with front or side operations	Offer adaptability to system design. In addition, no tools are required for the frontal direct handle providing easy and quick installation
Safe-to-touch transparent fuse covers	Cannot be opened in the "ON" position for extra protection and provides visibility to fuses—without opening module—for added convenience
Lockout-tagout	When the device is in the “OFF” position, a padlock can be added to ensure equipment is properly shut off during maintenance or repair to prevent the release of hazardous energy
Horizontal (standard), vertical and 45-degree mounting orientations	Offer switch installation options to adapt to system design
Test position on handle	Permits control circuit auxiliary testing without switching the main contacts on for added safety

Applications

- Industrial: service switchboards, distribution panels, control panels/motor control centers, compressors, drives, voltage stabilizers, UPS systems
- HVAC/R: air handling units, rooftop systems, compressors, chillers, refrigeration racks
- Mining: conveyor systems, main substations
- Solar: auxiliary services transformers
- Battery Energy Storage Systems: auxiliary services transformers

© 2023 Littelfuse, Inc.

LM3030 SERIES CL ASS J FUSE DISCONNECT SWITCH

Specifications

UL 98 Standards

Voltage Rating	600 V Ac
Amperage Rating	30 A
SCCR Rating	200 kA
Ambient Temperature	-20 °C to 50 °C (-4 °F to 122 °F)
Insulation Voltage Rating Ui	1000 V Ac
Impulse Withstand Voltage Rating U_{imp}	8 kV

Other Characteristics

Three Phase Maximum HP Rating/Motor FLA Current	240 V ac: 7.5 HP/22 A 480 V ac: 15 HP/21 A 600 V ac: 20 HP/22 A
Fuse	Class J*
Fuse Size	21 x 57 mm (0.82 x 2.24")
Connection	Cage
Tightening Torque	17.7 lb·in
Flange Wire Range	AWG #14-2
Base Mounting	Screws
Materials	Plastic housing, silver-plated copper terminals
Flammability Rating	UL 94 V-0
Applicable Standards	UL98 & UL 94 UL Guide WHTY UL Guide WHTY7 UL Listed E513470 CSA C22.2 NO 4 CE
Environmental	RoHS Compliant REACH
Country of Origin	Spain

*Fuses sold separately.

Certification & Compliance

cULus	UL 98, Fourteenth Edition, E513470
CE	Declaration of Conformity (Main Device): EU_DOC-LM3_230731_0 (Accessories): EU_DOC-LM3_Accessories_230731_0
RoHS	RoHS 2 Directive 2011/65/EU; Directive (EU) 2015/863
REACH	REACH declaration: Regulation (EC) No 1907/2006

© 2023 Littelfuse, Inc.

LM3030 SERIES CL ASS J FUSE DISCONNECT SWITCH

Accessories

Frontal Direct Handle LDM3SIB1
For open panel door access. Offers front operation. Features an easy push-to-detach system that requires no tools to attach or disassemble the handle.

Frontal External Handle with Shaft ON-OFF-TEST LDM3SAB1
For closed panel door access. Includes the 'TEST' position to enable testing of the control circuit auxiliaries without switching the main contacts on to simplify maintenance and increase safety. Offers front operation only.

Lateral External Handle with Shaft ON-OFF-TEST LDM3SBB1
For closed panel door access. Includes the 'TEST' position to enable testing of the control circuit auxiliaries without switching the main contacts on to simplify maintenance and increase safety. Offers side operation only.

Auxiliary Contact LDM3AUB1
Provides a signal to indicate the position of the switch.

Key Lock Device LDSCAB1 (single)
Locks the operation of the switch with a key to prevent accidents and increase safety.

Key Lock Device LDSCEB1 (double)
Locks the operation of the switch with a key to prevent accidents and increase safety.

Part Numbering System

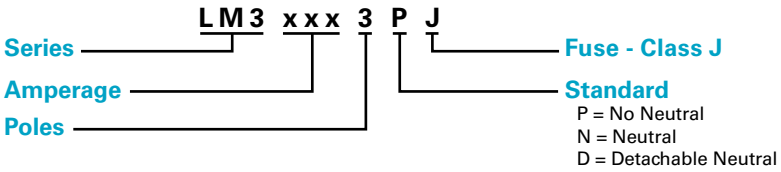

Ordering Information

PART NUMBER	AMPERAGE	VOLTAGE	NUMBER OF POLES	STANDARD	FUSE CLASS J*	FUSE SIZE
LM30303PJ	30 A	600	3	No Neutral	JTD/JLS	21 x 57 mm
LM30303NJ	30 A	600	3	Neutral	JTD/JLS	21 x 57 mm
LM30303DJ	30 A	600	3	Detachable Neutral	JTD/JLS	21 x 57 mm

*Fuses sold separately

© 2023 Littelfuse, Inc.

LM3030 SERIES CL ASS J FUSE DISCONNECT SWITCH

Dimensions Millimeters (inches)

LM30303PJ – No Neutral

FRONT VIEW

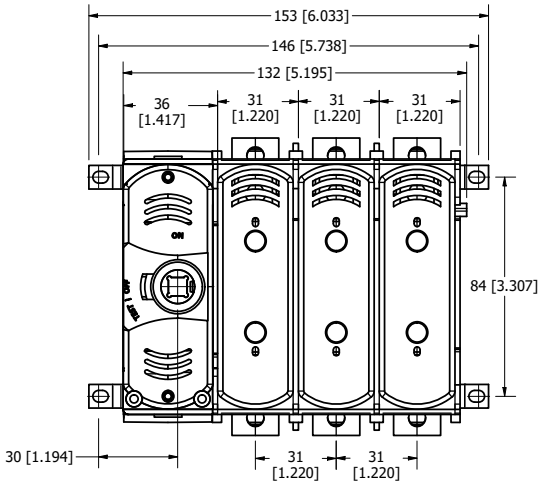

SIDE VIEW

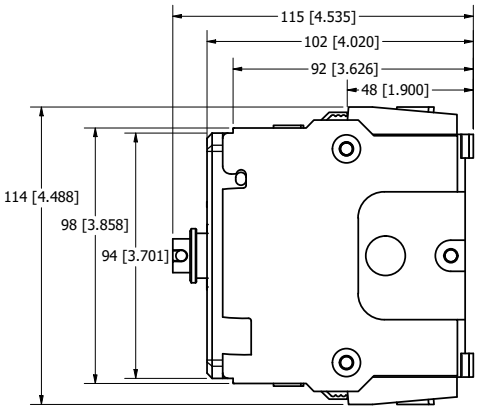

LM30303NJ – Neutral

FRONT VIEW

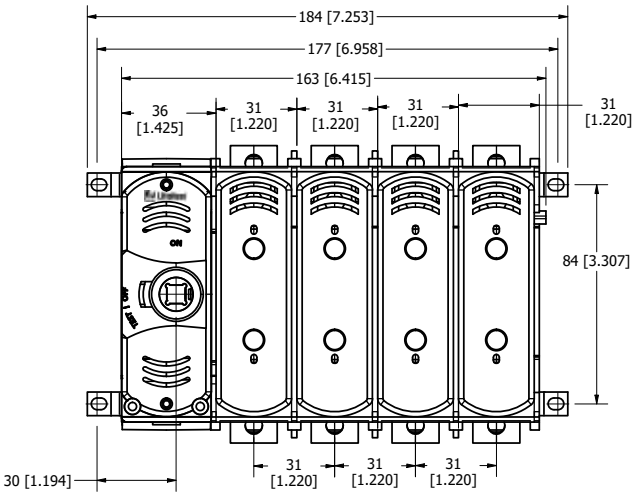

SIDE VIEW

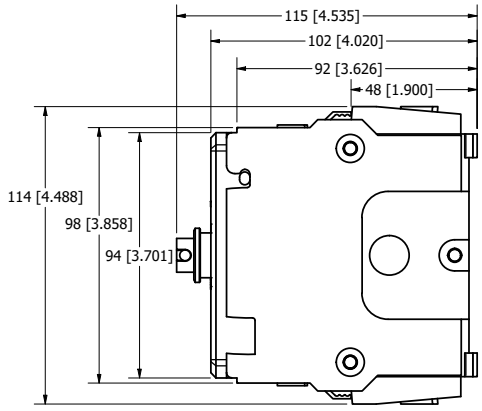

© 2023 Littelfuse, Inc.

LM3030 SERIES CL ASS J FUSE DISCONNECT SWITCH

LM30303DJ – Detachable Neutral

FRONT VIEW

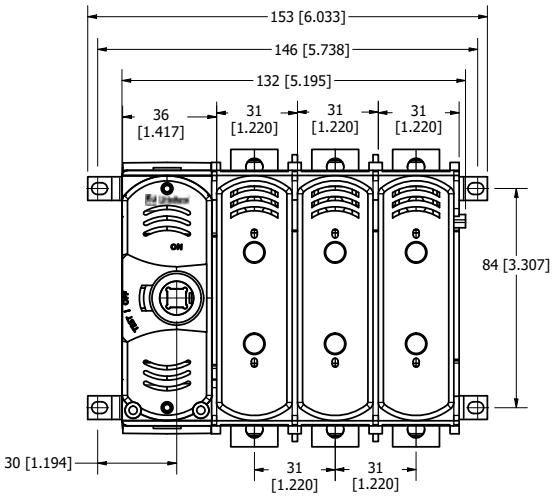

SIDE VIEW

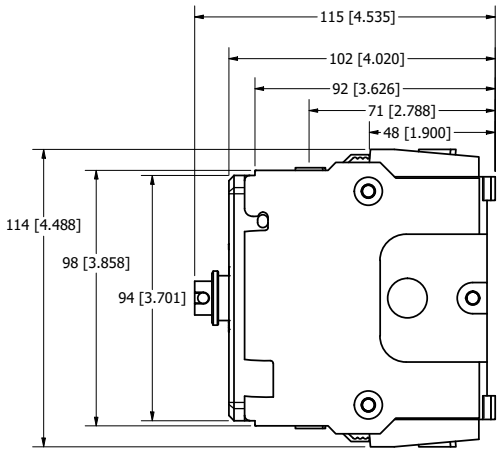

Switch – 3D Installation View

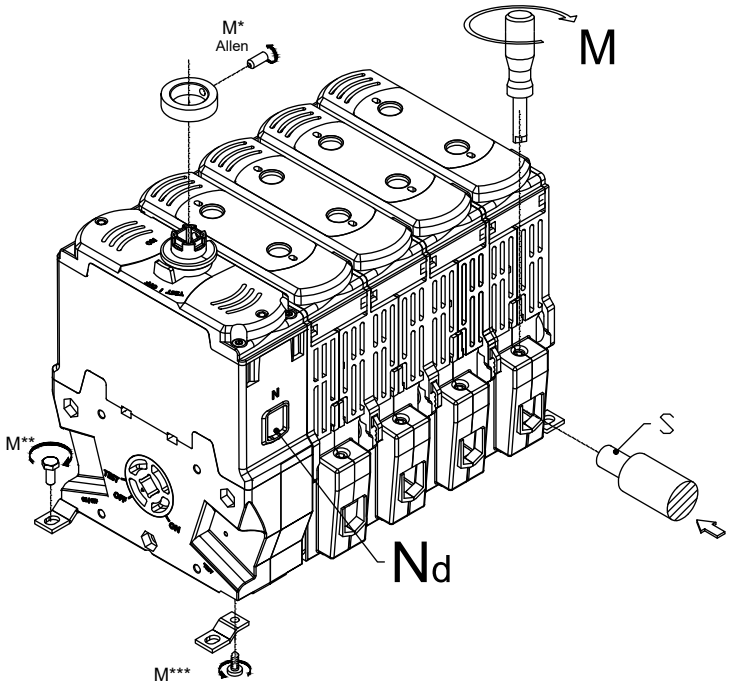

M		M (+5 % | -10 %)	
		N•M	LBF•INCH
*	M4	1	8.85
**	M4	1.5	13.3
***	CH 3.5	0.8	7.1

COPPER (CU) WIRE - S MAX				
THERMAL CURRENT RATING (Ith)	mm²	AWG	M (+5 % | -10 %)	
			N•M	LBF•INCH
30 A	1x 6	1x 10	2	17.7

LM3060 SERIES CL ASS J FUSE DISCONNECT SWITCH

60 A

REACH RoHS CE cULus



*Handle and fuses sold separately

Description

The Class J Fuse Disconnect Switch combines a switch and multiple fuses in a single, compact device. This switch, with both front or side operation, offers a simpler way to manually open and close a circuit while safeguarding against overcurrent and short circuits. When it detects an overload or short circuit, the fuse blows automatically to open or break the circuit both upstream and downstream and shuts off the equipment.

When installing or maintaining equipment, the Class J Fuse Disconnect Switch makes it easier to connect or disconnect the power in an isolated area. With a higher interrupting rating, it delivers more robust protection, increases personnel safety and offers a longer switch life.

Features & Benefits

FEATURES	BENEFITS
Fuse isolation	Makes it easy to segregate a particular fuse on the circuit for safe repair or maintenance
Double break contact system	Breaks circuit upstream and downstream enabling the switch to handle higher voltages and provide a longer switch life
Small footprint	Saves space and provides design flexibility
Optional handles (direct handle with push-to-detach system or external handle with shaft) with front or side operations	Offer adaptability to system design. In addition, no tools are required for the frontal direct handle providing easy and quick installation
Safe-to-touch transparent fuse covers	Cannot be opened in the "ON" position for extra protection and provides visibility to fuses—without opening module—for added convenience
Lockout-tagout	When the device is in the "OFF" position, a padlock can be added to ensure equipment is properly shut off during maintenance or repair to prevent the release of hazardous energy
Horizontal (standard), vertical and 45-degree mounting orientations	Offer switch installation options to adapt to system design
Test position on handle	Permits control circuit auxiliary testing without switching the main contacts on for added safety

Applications

- Industrial: service switchboards, distribution panels, control panels/motor control centers, compressors, drives, voltage stabilizers, UPS systems
- HVAC/R: air handling units, rooftop systems, compressors, chillers, refrigeration racks
- Mining: conveyor systems, main substations
- Solar: auxiliary services transformers
- Battery Energy Storage Systems: auxiliary services transformers

© 2023 Littelfuse, Inc.

LM3060 SERIES CL ASS J FUSE DISCONNECT SWITCH

Specifications

UL 98 Standards

Voltage Rating	600 V Ac
Amperage Rating	60 A
SCCR Rating	200 kA
Ambient Temperature	-20 °C to 50 °C (-4 °F to 122 °F)
Insulation Voltage Rating Ui	1000 V Ac
Impulse Withstand Voltage Rating U_{imp}	8 kV

Other Characteristics

Three Phase Maximum HP Rating/Motor FLA Current	240 V ac: 15 HP/42 A 480 V ac: 30 HP/40 A 600 V ac: 50 HP/52 A
Fuse	Class J*
Fuse Size	27 x 60 mm (1.06 x 2.36")
Connection	Terminal
Maximum Width Terminal Busbar Connection Range	20 mm
Tightening Torque	53 lb·in
Flange Wire Range	AWG #6-2/0 (terminal lug required)
Base Mounting	Screws
Materials	Plastic housing, silver-plated copper terminals
Flammability Rating	UL 94 V-0
Applicable Standards	UL98 & UL 94 UL Guide WHTY UL Guide WHTY7 UL Listed E513470 CSA C22.2 NO 4 CE
Environmental	RoHS Compliant REACH
Country of Origin	Spain

*Fuses sold separately.

Certification & Compliance

cULus	UL 98, Fourteenth Edition, E513470
CE	Declaration of Conformity (Main Device): EU_DOC-LM3_230731_0 (Accessories): EU_DOC-LM3_Accessories_230731_0
RoHS	RoHS 2 Directive 2011/65/EU; Directive (EU) 2015/863
REACH	REACH declaration: Regulation (EC) No 1907/2006

LM3060 SERIES CL ASS J FUSE DISCONNECT SWITCH

Accessories

Frontal Direct Handle LDM3SIB1
For open panel door access. Offers front operation. Features an easy push-to-detach system that requires no tools to attach or disassemble the handle.

Frontal External Handle with Shaft ON-OFF-TEST LDM3SAB1
For closed panel door access. Includes the 'TEST' position to enable testing of the control circuit auxiliaries without switching the main contacts on to simplify maintenance and increase safety. Offers front operation only.

Lateral External Handle with Shaft ON-OFF-TEST LDM3SBB1
For closed panel door access. Includes the 'TEST' position to enable testing of the control circuit auxiliaries without switching the main contacts on to simplify maintenance and increase safety. Offers side operation only.

Terminal Shrouds LDM3CU02
Protect against direct contact with the terminal.

Auxiliary Contact LDM3AUB1
Provides a signal to indicate the position of the switch.

Key Lock Device LDSCAB1 (single)
Locks the operation of the switch with a key to prevent accidents and increase safety.

Key Lock Device LDSCEB1 (double)
Locks the operation of the switch with a key to prevent accidents and increase safety.

Terminal Lugs LDM3TLU01 (1 pair)
Fastens the cable to a cage for stability.

Part Numbering System

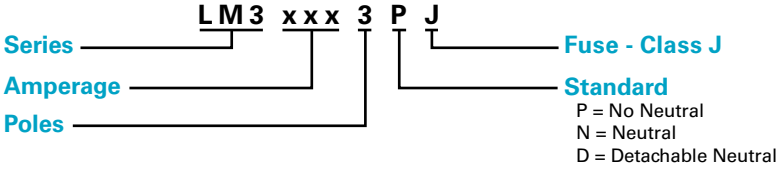

Ordering Information

PART NUMBER	AMPERAGE	VOLTAGE	NUMBER OF POLES	STANDARD	FUSE CLASS J*	FUSE SIZE
LM30603PJ	60 A	600	3	No Neutral	JTD/JLS	27 x 60 mm
LM30603NJ	60 A	600	3	Neutral	JTD/JLS	27 x 60 mm
LM30603DJ	60 A	600	3	Detachable Neutral	JTD/JLS	27 x 60 mm

*Fuses sold separately

© 2023 Littelfuse, Inc.

LM3060 SERIES CL ASS J FUSE DISCONNECT SWITCH

Dimensions Millimeters (inches)

LM30603PJ – No Neutral

FRONT VIEW

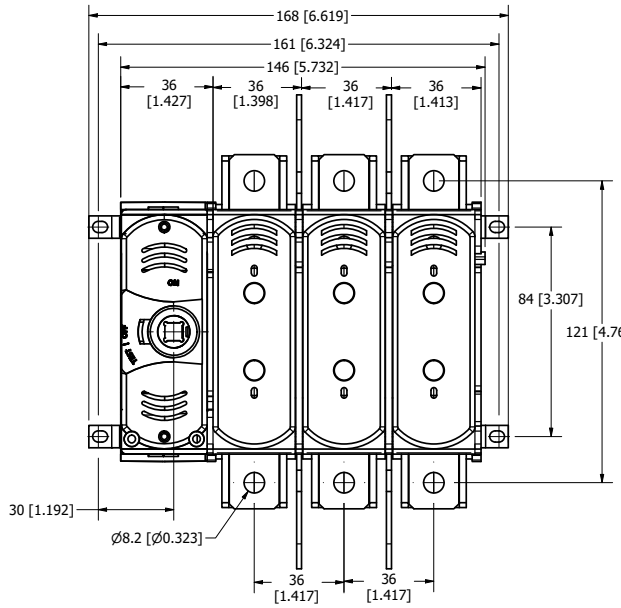

SIDE VIEW

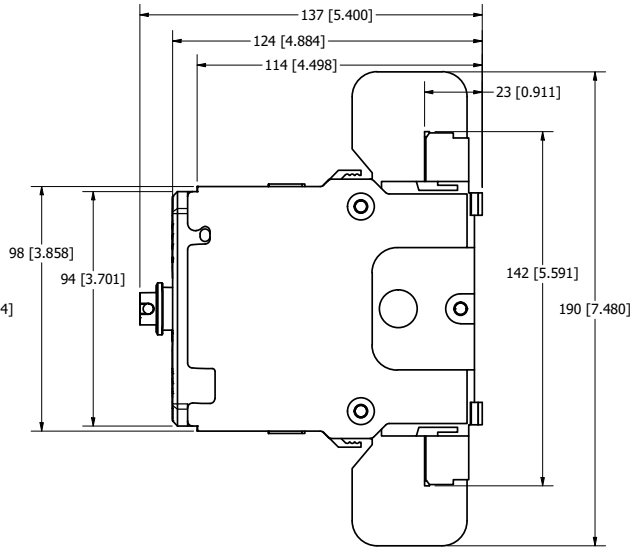

LM30603NJ – Neutral

FRONT VIEW

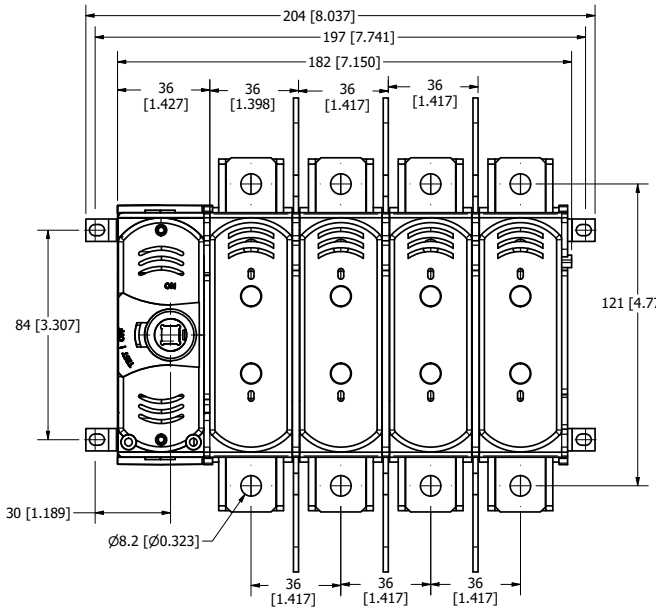

SIDE VIEW

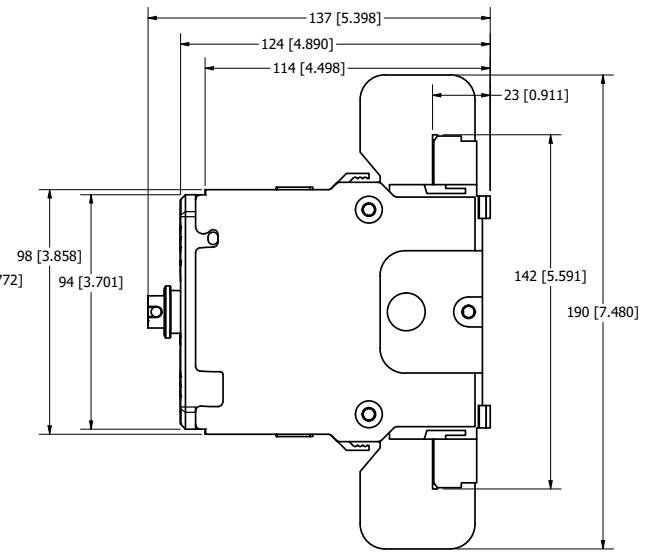

LM3060 SERIES CL ASS J FUSE DISCONNECT SWITCH

LM30603DJ – Detachable Neutral

FRONT VIEW

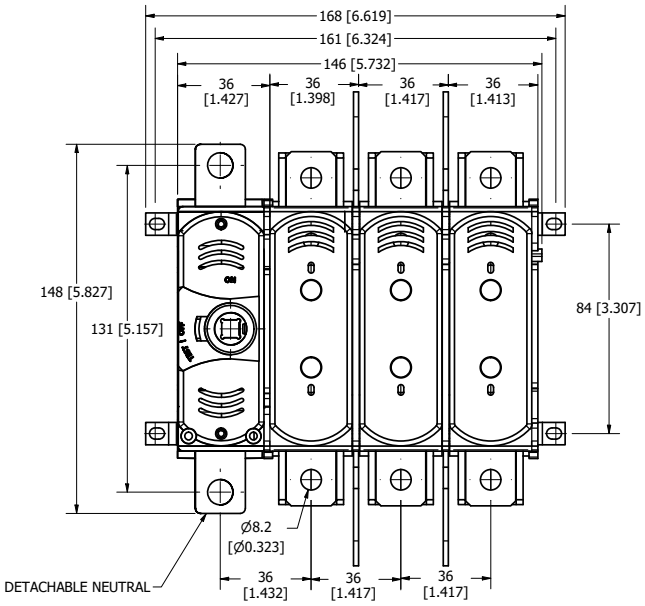

SIDE VIEW

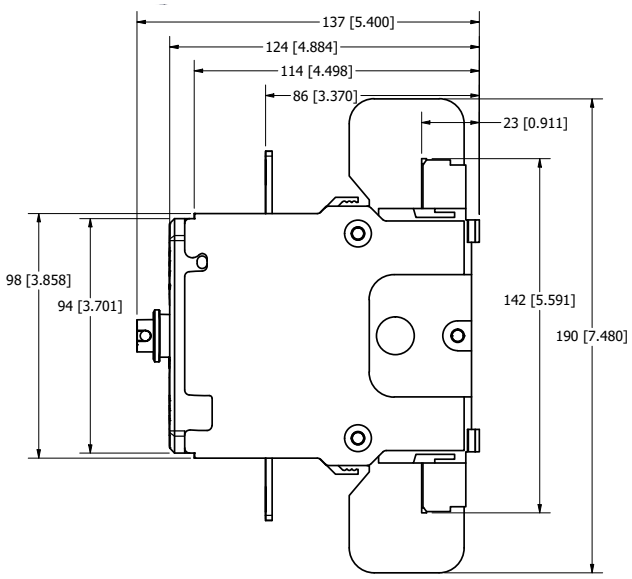

Switch – 3D Installation View

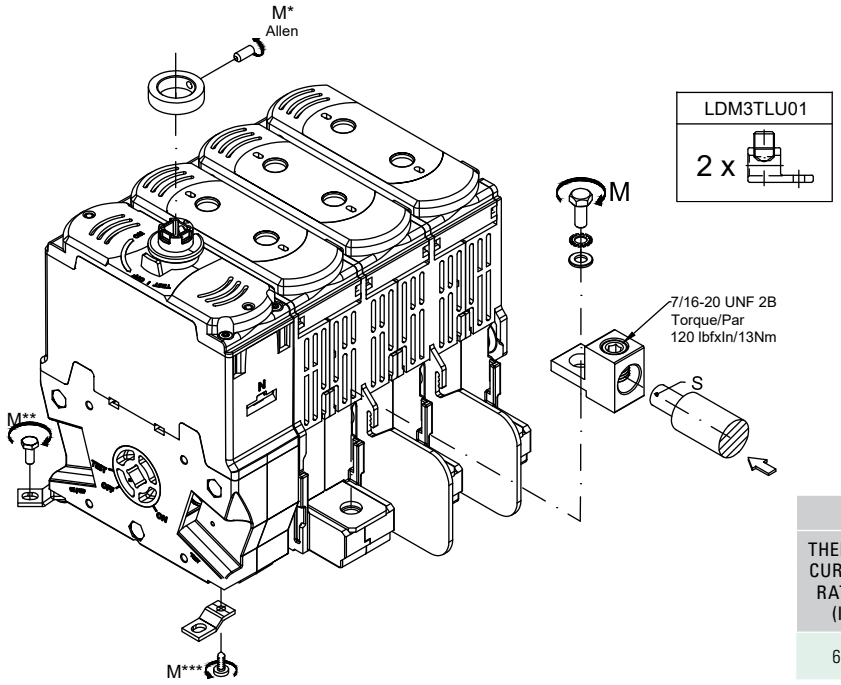

LDM3TLU01
2 x

M		M (+5 % | -10 %)	
		N•M	LBF•INCH
*	M4	1	8.85
**	M4	1.5	13.3
***	CH 3.5	0.8	7.1
**** Optional terminal lugs for attachment	UNF 2B 7/16-20	13	120

COPPER (CU) WIRE - S MAX					
THERMAL CURRENT RATING (Ith)	mm²	AWG		M (+5 % | -10 %)	
				N•M	LBF•INCH
60 A	6-50	10-2/0	M8	6	53

© 2023 Littelfuse, Inc.

LM3100 SERIES CL ASS J FUSE DISCONNECT SWITCH

100 A

REACH RoHS





*Handle and fuses sold separately

Description

The Class J Fuse Disconnect Switch combines a switch and multiple fuses in a single, compact device. This switch, with both front or side operation, offers a simpler way to manually open and close a circuit while safeguarding against overcurrent and short circuits. When it detects an overload or short circuit, the fuse blows automatically to open or break the circuit both upstream and downstream and shuts off the equipment.

When installing or maintaining equipment, the Class J Fuse Disconnect Switch makes it easier to connect or disconnect the power in an isolated area. With a higher interrupting rating, it delivers more robust protection, increases personnel safety and offers a longer switch life.

Features & Benefits

FEATURES	BENEFITS
Fuse isolation	Makes it easy to segregate a particular fuse on the circuit for safe repair or maintenance
Double break contact system	Breaks circuit upstream and downstream enabling the switch to handle higher voltages and provide a longer switch life
Small footprint	Saves space and provides design flexibility
Optional handles (direct handle with push-to-detach system or external handle with shaft) with front or side operations	Offer adaptability to system design. In addition, no tools are required for the frontal direct handle providing easy and quick installation
Safe-to-touch transparent fuse covers	Cannot be opened in the "ON" position for extra protection and provides visibility to fuses—without opening module—for added convenience
Lockout-tagout	When the device is in the "OFF" position, a padlock can be added to ensure equipment is properly shut off during maintenance or repair to prevent the release of hazardous energy
Horizontal (standard), vertical and 45-degree mounting orientations	Offer switch installation options to adapt to system design
Test position on handle	Permits control circuit auxiliary testing without switching the main contacts on for added safety

Applications

- Industrial: service switchboards, distribution panels, control panels/motor control centers, compressors, drives, voltage stabilizers, UPS systems
- HVAC/R: air handling units, rooftop systems, compressors, chillers, refrigeration racks
- Mining: conveyor systems, main substations
- Solar: auxiliary services transformers
- Battery Energy Storage Systems: auxiliary services transformers

© 2023 Littelfuse, Inc.

LM3100 SERIES CL ASS J FUSE DISCONNECT SWITCH

Specifications

UL 98 Standards

Voltage Rating	600 V Ac
Amperage Rating	100 A
SCCR Rating	200 kA
Ambient Temperature	-20 °C to 50 °C (-4 °F to 122 °F)
Insulation Voltage Rating Ui	1000 V Ac
Impulse Withstand Voltage Rating U_{imp}	12 kV

Other Characteristics

Three Phase Maximum HP Rating/Motor FLA Current	240 V ac: 30 HP/80 A 480 V ac: 60 HP/77 A 600 V ac: 75 HP/77 A
Fuse	Class J*
Fuse Size	29 x 117 mm (1.14 x 4.60")
Connection	Terminal
Maximum Width Terminal Busbar Connection Range	30 mm
Tightening Torque	159 lb·in
Flange Wire Range	AWG #3/0 - 300 kcmil (terminal lug required)
Base Mounting	Screws
Materials	Plastic housing, tin-plated copper terminals
Flammability Rating	UL 94 V-0
Applicable Standards	UL98 & UL 94 UL Guide WHTY UL Guide WHTY7 UL Listed E513470 CSA C22.2 NO 4 CE
Environmental	RoHS Compliant REACH
Country of Origin	Spain

*Fuses sold separately.

Certification & Compliance

cULus	UL 98, Fourteenth Edition, E513470
CE	Declaration of Conformity (Main Device): EU_DOC-LM3_230731_0 (Accessories): EU_DOC-LM3_Accessories_230731_0
RoHS	RoHS 2 Directive 2011/65/EU; Directive (EU) 2015/863
REACH	REACH declaration: Regulation (EC) No 1907/2006

© 2023 Littelfuse, Inc.

LM3100 SERIES CL ASS J FUSE DISCONNECT SWITCH

Accessories

Frontal Direct Handle LDM3SI11
For open panel door access. Offers front operation. Features an easy push-to-detach system that requires no tools to attach or disassemble the handle.

Frontal External Handle with Shaft ON-OFF-TEST LDM3SA11
For closed panel door access. Includes the 'TEST' position to enable testing of the control circuit auxiliaries without switching the main contacts on to simplify maintenance and increase safety. Offers front operation only.

Lateral External Handle with Shaft ON-OFF-TEST LDM3SB11
For closed panel door access. Includes the 'TEST' position to enable testing of the control circuit auxiliaries without switching the main contacts on to simplify maintenance and increase safety. Offers side operation only.

Terminal Shrouds LDM3CU13
Protect against direct contact with the terminal.

Auxiliary Contact LDM3AUB1
Provides a signal to indicate the position of the switch.

Phase Barriers LDM3SF12
Isolates/separates active parts to increase clearance and decrease creepage.

Key Lock Device LDSCA11 (single)
Locks the operation of the switch with a key to prevent accidents and increase safety.

Key Lock Device LDSCE11 (double)
Locks the operation of the switch with a key to prevent accidents and increase safety.

Terminal Lugs LDM3TLU11 (1 pair)
Fastens the cable to a cage for stability.

Part Numbering System

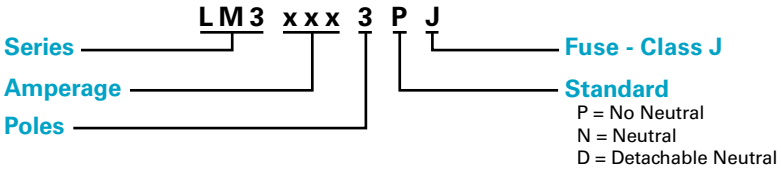

Ordering Information

PART NUMBER	AMPERAGE	VOLTAGE	NUMBER OF POLES	STANDARD	FUSE CLASS J*	FUSE SIZE
LM31003PJ	100 A	600	3	No Neutral	JTD/JLS	29 x 117 mm
LM31003NJ	100 A	600	3	Neutral	JTD/JLS	29 x 117 mm
LM31003DJ	100 A	600	3	Detachable Neutral	JTD/JLS	29 x 117 mm

*Fuses sold separately

LM3100 SERIES CL ASS J FUSE DISCONNECT SWITCH

Dimensions Millimeters (inches)

LM31003PJ – No Neutral

FRONT VIEW

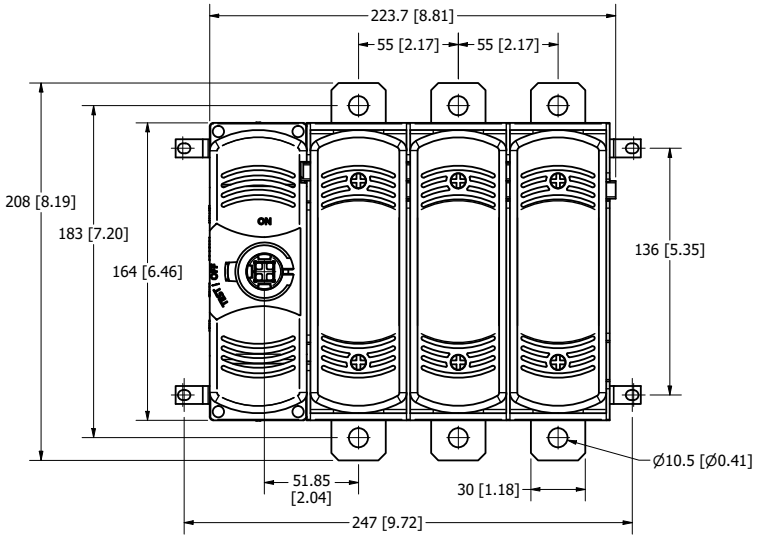

SIDE VIEW

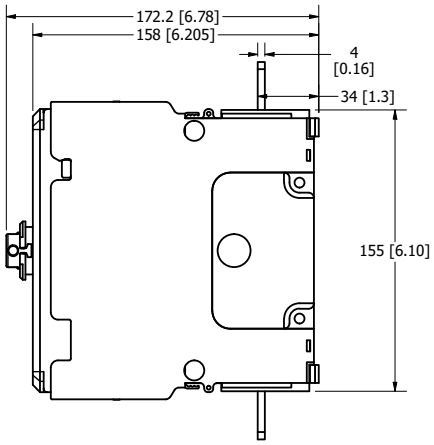

LM31003NJ – Neutral

FRONT VIEW

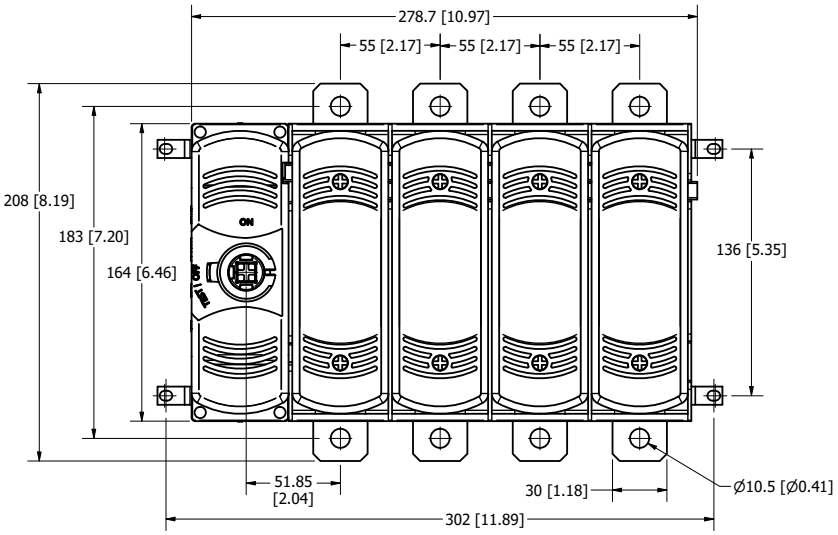

SIDE VIEW

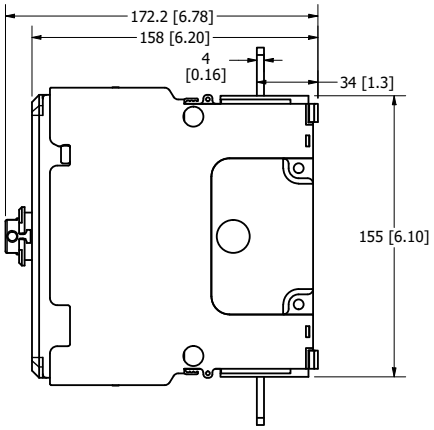

© 2023 Littelfuse, Inc.

LM3100 SERIES CL ASS J FUSE DISCONNECT SWITCH

FRONT VIEW

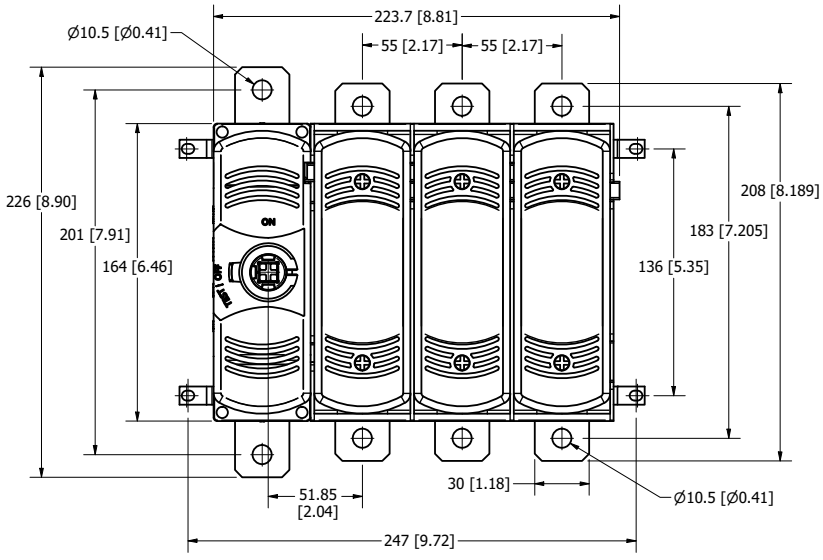

SIDE VIEW

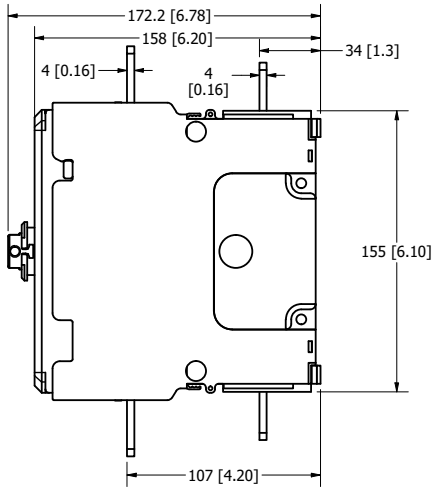

Switch – 3D Installation View

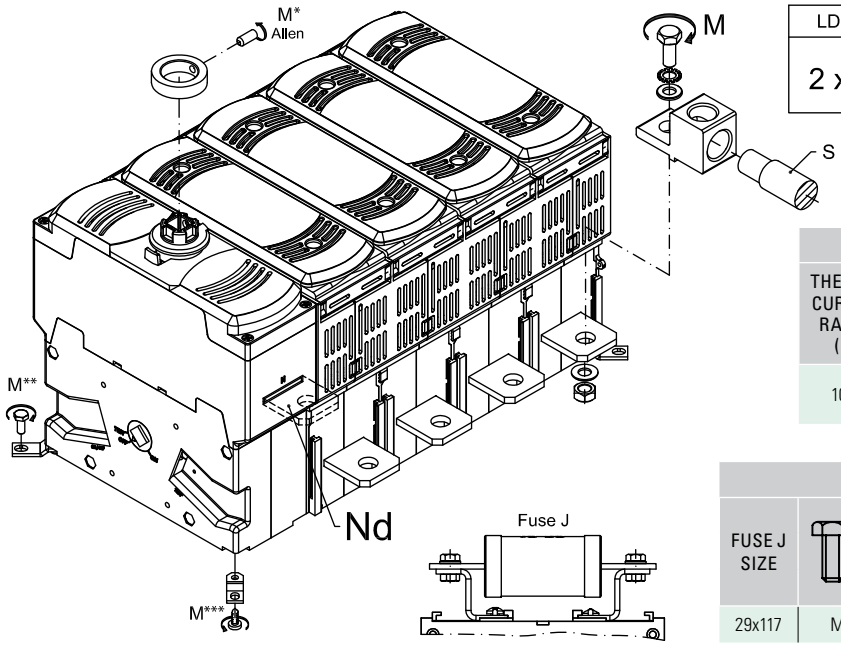

LDM3TLU11
2 x

M		M (+5 % | -10 %)	
		N•M	LBF•INCH
*	M5	1.2	10.6
**	M4	1.5	13.3
***	P4	0.8	7.1

COPPER (CU) WIRE - S MAX					
THERMAL CURRENT RATING (Ith)	mm²	AWG		M (+5 % | -10 %)	
				N•M	LBF•INCH
100 A	1x 300	1x 6	M10	18	159

FUSE J							
FUSE J SIZE	L	SCREW LENGTH				M (+5 % | -10 %)	
		MIN		MAX		N•M	LBF•INCH
		mm	In	mm	In		
29x117	M6	15	0.59	20	0.78	5	44.2

LM3200 SERIES CL ASS J FUSE DISCONNECT SWITCH

200 A

REACH RoHS CE cULus





*Handle and fuses sold separately

Description

The Class J Fuse Disconnect Switch combines a switch and multiple fuses in a single, compact device. This switch, with both front or side operation, offers a simpler way to manually open and close a circuit while safeguarding against overcurrent and short circuits. When it detects an overload or short circuit, the fuse blows automatically to open or break the circuit both upstream and downstream and shuts off the equipment.

When installing or maintaining equipment, the Class J Fuse Disconnect Switch makes it easier to connect or disconnect the power in an isolated area. With a higher interrupting rating, it delivers more robust protection, increases personnel safety and offers a longer switch life.

Features & Benefits

FEATURES	BENEFITS
Fuse isolation	Makes it easy to segregate a particular fuse on the circuit for safe repair or maintenance
Double break contact system	Breaks circuit upstream and downstream enabling the switch to handle higher voltages and provide a longer switch life
Small footprint	Saves space and provides design flexibility
Optional handles (direct handle with push-to-detach system or external handle with shaft) with front or side operations	Offer adaptability to system design. In addition, no tools are required for the frontal direct handle providing easy and quick installation
Safe-to-touch transparent fuse covers	Cannot be opened in the "ON" position for extra protection and provides visibility to fuses—without opening module—for added convenience
Lockout-tagout	When the device is in the "OFF" position, a padlock can be added to ensure equipment is properly shut off during maintenance or repair to prevent the release of hazardous energy
Horizontal (standard), vertical and 45-degree mounting orientations	Offer switch installation options to adapt to system design
Test position on handle	Permits control circuit auxiliary testing without switching the main contacts on for added safety

Applications

- Industrial: service switchboards, distribution panels, control panels/motor control centers, compressors, drives, voltage stabilizers, UPS systems
- HVAC/R: air handling units, rooftop systems, compressors, chillers, refrigeration racks
- Mining: conveyor systems, main substations
- Solar: auxiliary services transformers
- Battery Energy Storage Systems: auxiliary services transformers

 © 2023 Littelfuse, Inc.

LM3200 SERIES CL ASS J FUSE DISCONNECT SWITCH

Specifications

UL 98 Standards

Voltage Rating	600 V Ac
Amperage Rating	200 A
SCCR Rating	200 kA
Ambient Temperature	-20 °C to 50 °C (-4 °F to 122 °F)
Insulation Voltage Rating Ui	1000 V Ac
Impulse Withstand Voltage Rating U_{imp}	12 kV

Other Characteristics

Three Phase Maximum HP Rating/Motor FLA Current	240 V ac: 50 HP/130 A 480 V ac: 100 HP/124 A 600 V ac: 125 HP/125 A
Fuse	Class J*
Fuse Size	41 x 146 mm (1.61 x 5.75")
Connection	Terminal
Maximum Width Terminal Busbar Connection Range	30 mm
Tightening Torque	159 lb·in
Flange Wire Range	AWG #3/0 - 300 kcmil (terminal lug required)
Base Mounting	Screws
Materials	Plastic housing, tin-plated copper terminals
Flammability Rating	UL 94 V-0
Applicable Standards	UL98 & UL 94 UL Guide WHTY UL Guide WHTY7 UL Listed E513470 CSA C22.2 NO 4 CE
Environmental	RoHS Compliant REACH
Country of Origin	Spain

*Fuses sold separately.

Certification & Compliance

cULus	UL 98, Fourteenth Edition, E513470
CE	Declaration of Conformity (Main Device): EU_DOC-LM3_230731_0 (Accessories): EU_DOC-LM3_Accessories_230731_0
RoHS	RoHS 2 Directive 2011/65/EU; Directive (EU) 2015/863
REACH	REACH declaration: Regulation (EC) No 1907/2006

LM3200 SERIES CL ASS J FUSE DISCONNECT SWITCH

Accessories

Direct Handle LDM3SI11
For open panel door access. Offers front operation. Features an easy push-to-detach system that requires no tools to attach or disassemble the handle.

Frontal External Handle with Shaft ON-OFF-TEST LDM3SA11
For closed panel door access. Includes the 'TEST' position to enable testing of the control circuit auxiliaries without switching the main contacts on to simplify maintenance and increase safety. Offers front operation only.

Lateral External Handle with Shaft ON-OFF-TEST LDM3SB11
For closed panel door access. Includes the 'TEST' position to enable testing of the control circuit auxiliaries without switching the main contacts on to simplify maintenance and increase safety. Offers side operation only.

Terminal Shrouds LDM3CU13
Protect against direct contact with the terminal.

Auxiliary Contact LDM3AUB1
Provides a signal to indicate the position of the switch.

Phase Barriers LDM3SF12
Isolates/separates active parts to increase clearance and decrease creepage.

Key Lock Device LDSCA11 (single)
Locks the operation of the switch with a key to prevent accidents and increase safety.

Key Lock Device LDSCE11 (double)
Locks the operation of the switch with a key to prevent accidents and increase safety.

Terminal Lugs LDM3TLU11 (1 pair)
Fastens the cable to a cage for stability.

Part Numbering System

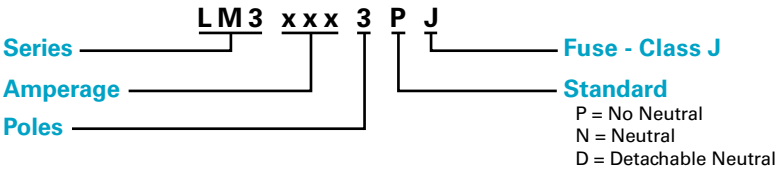

Ordering Information

PART NUMBER	AMPERAGE	VOLTAGE	NUMBER OF POLES	STANDARD	FUSE CLASS J*	FUSE SIZE
LM32003PJ	200 A	600	3	No Neutral	JTD/JLS	41 x 146 mm
LM32003NJ	200 A	600	3	Neutral	JTD/JLS	41 x 146 mm
LM32003DJ	200 A	600	3	Detachable Neutral	JTD/JLS	41 x 146 mm

*Fuses sold separately

© 2023 Littelfuse, Inc.

LM3200 SERIES CL ASS J FUSE DISCONNECT SWITCH

Dimensions Millimeters (inches)

LM32003PJ – No Neutral

FRONT VIEW

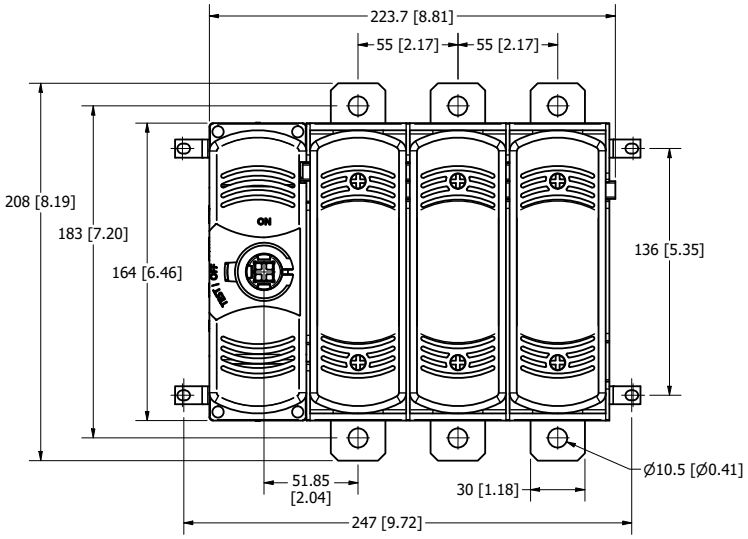

SIDE VIEW

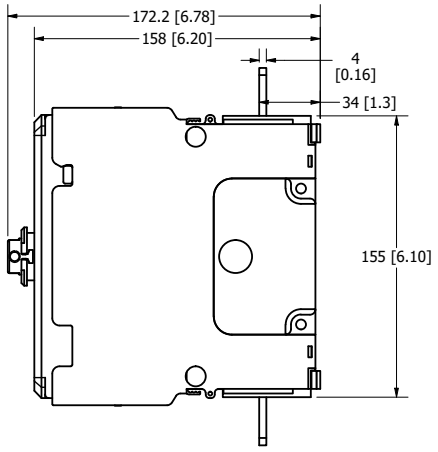

LM32003NJ – Neutral

FRONT VIEW

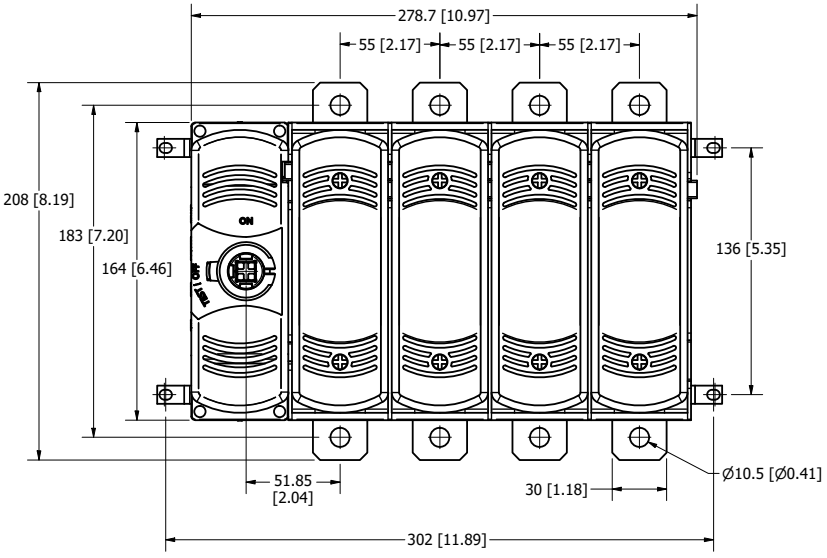

SIDE VIEW

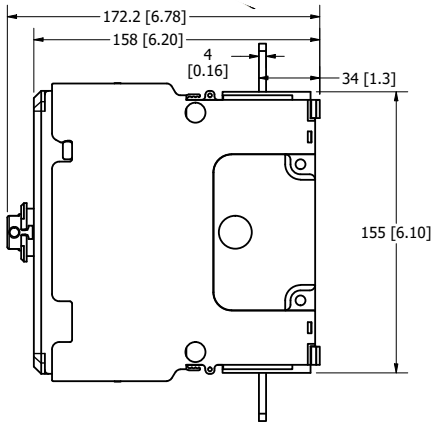

LM3200 SERIES CL ASS J FUSE DISCONNECT SWITCH

LM32003DJ – Detachable Neutral

FRONT VIEW

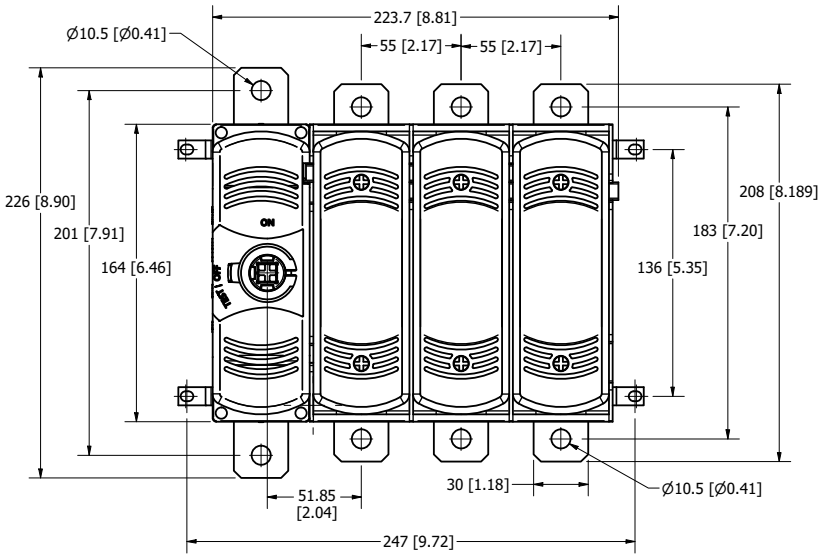

SIDE VIEW

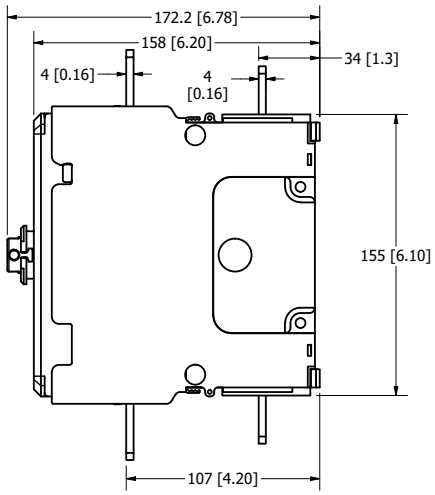

Switch – 3D Installation View

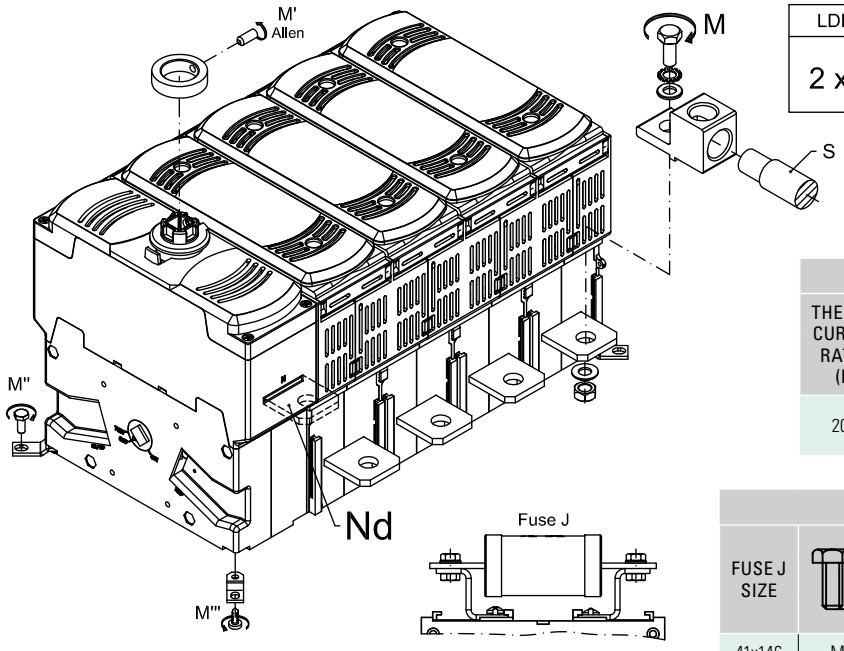

LDM3TLU11

2 x 

M		M (+5 % | -10 %)	
		N•M	LBF•INCH
*	M5	1.2	10.6
**	M4	1.5	13.3
***	P4	0.8	7.1

COPPER (CU) WIRE - S MAX					
THERMAL CURRENT RATING (Ith)	mm²	AWG		M (+5 % | -10 %)	
				1X	LBF•INCH
200 A	1x 300	1x 6	M10	18	159

FUSE J							
FUSE J SIZE		SCREW LENGTH				M (+5 % | -10 %)	
		MIN		MAX		N•M	LBF•INCH
		mm	In	mm	In		
41x146	M6	15	0.59	20	0.78	5	44.2

© 2023 Littelfuse, Inc.

Section Overview

POWR-GARD's pre-engineered solutions include electrical panels engineered to meet NEC requirements, as well as fused and non-fused disconnect switches. These customizable, one-piece solutions save time and money by streamlining the installation process and minimizing system downtime.







PRE-ENGINEERED SOLUTIONS

Table of Contents

LFCP Fused Selection Coordination Panel 264

LCP Fused Selective Coordination Panel 266

LPS Series POWR-Switch (Shunt Trip Disconnect) 268

© 2023 Littelfuse, Inc.

LFCP SERIES FUSED COORDINATION PANEL

Selective Coordination Panel



Description

The Littelfuse LFCP series fused coordination panel is a compact fusible and easily configurable pre-engineered panel for circuits requiring selective coordination. Rated up to 600 V ac, this coordination panel saves time and money, plus increases safety, by minimizing system downtime.

The advanced LFCP series is available with 200 kA SCCR rating using Class CC and J fuses and can be used on branch and feeder/ service entrance circuits.

Features/Benefits

- Meets NEC selective coordination code requirements
- Main lug only or main fused disconnect options available
- Class CC fuse holders have built-in open-circuit indication
- 35 A–200 A Class J fuses are available with open-circuit indication
- Uses standard disconnects and Class CC and J fuses
- Feed-through lugs available
- Neutral options are configurable for service entrance
- Ground options can be field isolated
- Copper bus standard
- Surface mount
- Available in standard 20" width enclosure for easy installation
- Door-in-door construction standard
- NEMA 1 indoor enclosure

Additional Design Options

- 200 % neutral rating
- Spare fuse storage (holds 10 spare CC fuses)
- Surge protective device overvoltage protection

Specifications

Voltage Ratings	600 V ac or less*
Ampere Ratings	60 A, 100 A and 200 A
Conductor Terminals	See next page
UL Listed	UL 67 Enclosed Panelboard
SCCR	200 kA at 600 V ac

* Suitable for 120/208, 277/480 and 600 V ac applications

Applications

- Elevators
- Hospitals and medical centers
- Hotels
- Entertainment industry
- Amusement parks and stadiums
- Multi-unit residential constructions
- Schools

Code Requirements

NEC requires that the following systems be selectively coordinated:

- Health Care Essential Electrical Systems (NEC 517.26)
- Elevators (NEC 620.62)
- Emergency Systems (NEC 700.32 in 2017) (NEC700.28 in 2014)
- Legally Required Standby Systems (NEC 701.18)
- Critical Operations Power Systems (NEC 708.54)

Web Resources

For more information, visit: **Littelfuse.com/LFCP**

© 2023 Littelfuse, Inc.

LFCP SERIES FUSED COORDINATION PANEL

Part Numbering System

LFCP6 FD 30 – 00 4 S B T = Littlefuse Catalog Number LFCP6FD30-004SBT

LITTELFUSE PANEL CATALOG NUMBER		MAIN DEVICE		TOTAL BRANCH CIRCUITS		60 A BRANCH CIRCUITS (AVAILABLE IN 3 POLE ONLY)		PANEL VOLTAGE		SURGE PROTECTION		FEED		BUSBAR PLATING	
Required		Required		Required		Required		Required		Optional		Optional		Optional	
Catalog Number	Rating	Type	Code	Quantity	Code	Quantity	Code	Type	Code	Type	Code	Type	Code	Type	Code
LFCP6 LFCP1 LFCP2	60 A 100 A 200 A	Fused Disconnect	FD	18 24 30 36 42	18 24 30 36 42	0 3 6 9 12	00 03 06 09 12	120/208 V*	2	SPD2** Series	S	Top (Standard)	Blank	Un-plated (Standard)	Blank
		Main Lug Only	ML					277/480 V*	4			Bottom	B	Tin	T
														Silver	A

*Contact factory for 240 V single phase option.
** Contact factory for SPD with neutral to ground protection.

Physical Characteristics

ENCLOSURE SIZE	PANEL CIRCUIT	"A" DIMENSIONAL HEIGHT	"B" DIMENSIONAL HEIGHT	TYPE(S)	MAIN WIRE RANGE (AWG)	NEUTRAL WIRE RANGE (AWG)	GROUND WIRE RANGE (AWG)	FEED-THROUGH WIRE RANGE (AWG)
20"Wx50"H	200 A	1273.2 [50.125]	1133.5 [44.625]	MLO	6–300 kcmil	4–600 kcmil	6–350 kcmil	N/A
				Fused Disconnect	4–300 kcmil	4–600 kcmil	6–350 kcmil	6–3/0
	100 A			Fused Disconnect	14–2/0	6–350 kcmil	6–350 kcmil	6–3/0
20"Wx32"H	175 A	816.0 [32.125]	676.3 [26.625]	MLO	6–3/0	6–350 kcmil* 4–600 kcmil*	6–350 kcmil	N/A
	60 A			Fused Disconnect	14–4	6–350 kcmil	6–350 kcmil	6–3/0

Note: 200 % neutral wire ranges are shown.
*Dependent on specific panel amperage to provide 200 % rated neutral.

Dimensions Millimeters (inches)

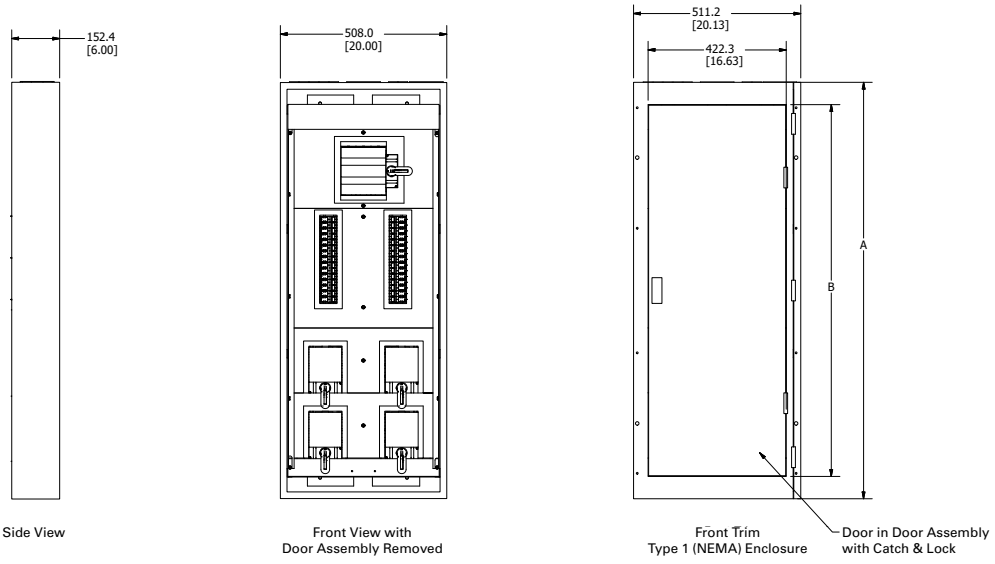

Series	A mm [in]	B mm [in]
LFCP2FD	1273.2 [50.125]	1133.5 [44.625]
LFCP2ML	1273.2 [50.125]	1133.5 [44.625]
LFCP1FD	1273.2 [50.125]	1133.5 [44.625]
LFCP1ML	816.0 [32.125]	676.3 [26.625]
LFCP6FD	816.0 [32.125]	676.3 [26.625]

Warranty – Visit **www.littelfuse.com/warranty** for details.

LCP FUSED COORDINATION PANEL

Selective Coordination Panel



Description

The Littelfuse Coordination Panel provides a simple, time-saving solution for circuits that require selective coordination. This UL Listed product saves time and money, and increases safety by minimizing system downtime.

Applications

- Elevators
- Hospitals
- Hotel and Entertainment Industry
- Amusement Parks and Stadiums

Code Requirements

Systems required by the NEC® to be selectively coordinated include:

- Health Care Essential Electrical Systems (NEC 517.26)
- Elevators (NEC 620.62)
- Emergency Systems (NEC 700.32 in 2017) (NEC 700.28 in 2014)
- Legally Required Standby Systems (NEC 701.18)
- Critical Operations Power Systems (NEC 708.54)

Features/Benefits

- Meets NEC® requirements
- Class CC and J fuse holders have built-in open-circuit indication
- Fast-acting UL Listed fuses protect against short circuits
- Feed through/sub feed lugs and 84-circuit configuration available
- Ground and neutral bars
- Copper bus standard

Advanced Design Options

- MLO, Main Circuit Breaker, or Main Fused Pullout device
- Fused Class T branch circuit pullout
- Spare fuse cabinet accessory (holds six spare fuses)
- SPD overvoltage protection
- Any NEMA enclosure required
- High amperage sub-fed branch breakers (J60A)

Specifications

Voltage Ratings	120/208, 120/240, 277/480 VAC
Main Bus Rating	100 A - 400 A Standard
Conductor Terminals	6 AWG - 300 kcmil
UL Listed	UL 67 Panel boards and UL 50 Enclosures
SCCR	100 kA Max*

* The following current-limiting fuses must be used directly upstream for 100kA SCCR.

1. 120/208 Volt Panels – LLNRK 100 A max, JTD_ID 200 A max, or JLLN 200 A max

2. 120/240 Volt Panels – LLSRK_ID 200 A max, JTD_ID 200 A max, or JLLS 200 A max

3. 277/480 Volt Panels – LLSRK_ID 200 A max, JTD_ID 200 A max, or JLLS 200 A max

Web Resources

For more information, visit: **littelfuse.com/lcp**

Customizable Options (select one from each column)

NUMBER OF CIRCUITS	VOLTAGE	MAIN DEVICES	NEUTRAL RATING	PANEL MOUNTING	PANEL DOOR	FUSE HOLDERS	BRANCH CIRCUIT PROTECTION DEVICES (1-3 POLE)†	PANEL FEED	OPTIONAL LUGS	STANDARD ENCLOSURE RATING
2 - 42	120/208 V 3P, 4 W 120/240 V 1P, 3 W 277/480 V 3P, 4 W	125, 225, 400 or 600 A MLO Up to 600 A MCB or Main Fuse Pullout	100% 200%	Surface Flush	Standard Door-in-door	30 A Class CC 60 A Class J >100A Class T	10 A - 60 A fused circuit breaker 70 A - 200 A fused pullouts Sub-fed circuit breakers >60 A (not fused)	Top Bottom	None Sub-Fed (MLO panels) Feed-Through	NEMA 1 NEMA 3R NEMA 4X NEMA 12

†Fuses quoted separately to meet panel specifications. Coordination for breakers >60 A depends on upstream and downstream devices. More specialized configurations are also available. Contact factory for more information.

Note: The Littelfuse LPS and LCP products are custom designed products that fall outside standard specifications.

 © 2023 Littelfuse, Inc.

LCP FUSED COORDINATION PANEL

Selective Coordination Panel

Dimensions mm (inches)

Standard Coordination Panel Board (up to 30 circuits)

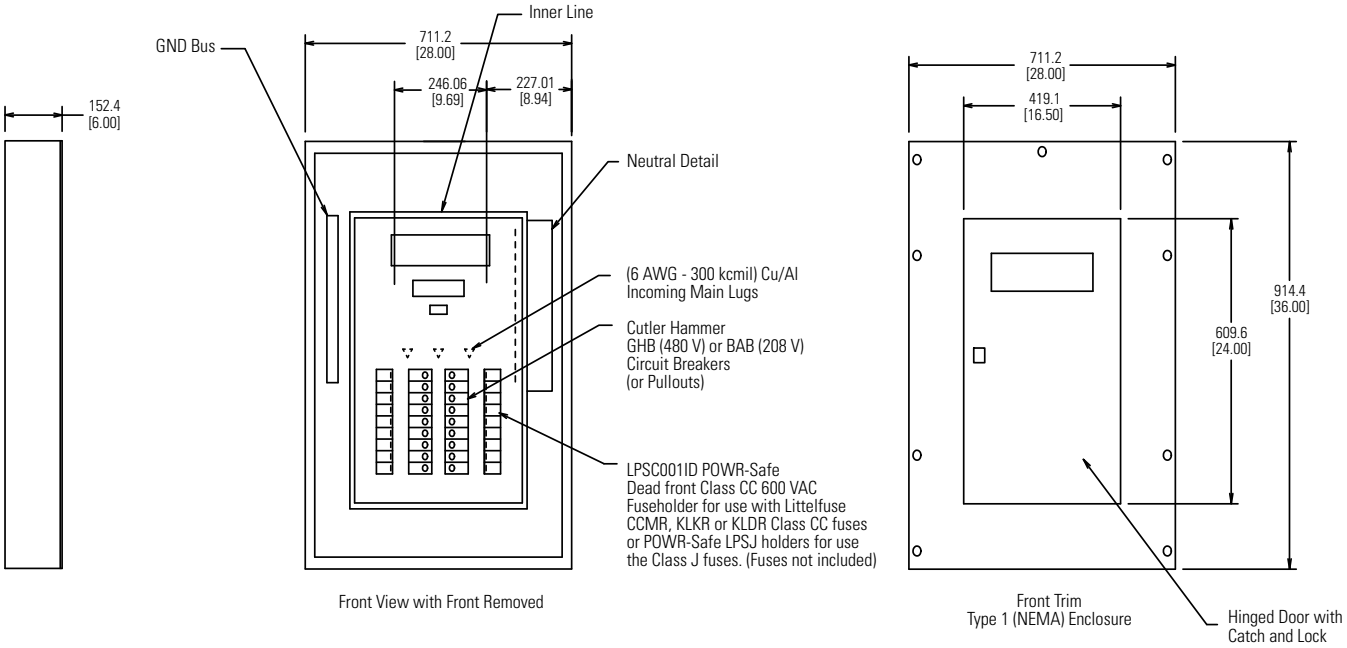

Standard Coordination Panel Board (31-42 circuits)

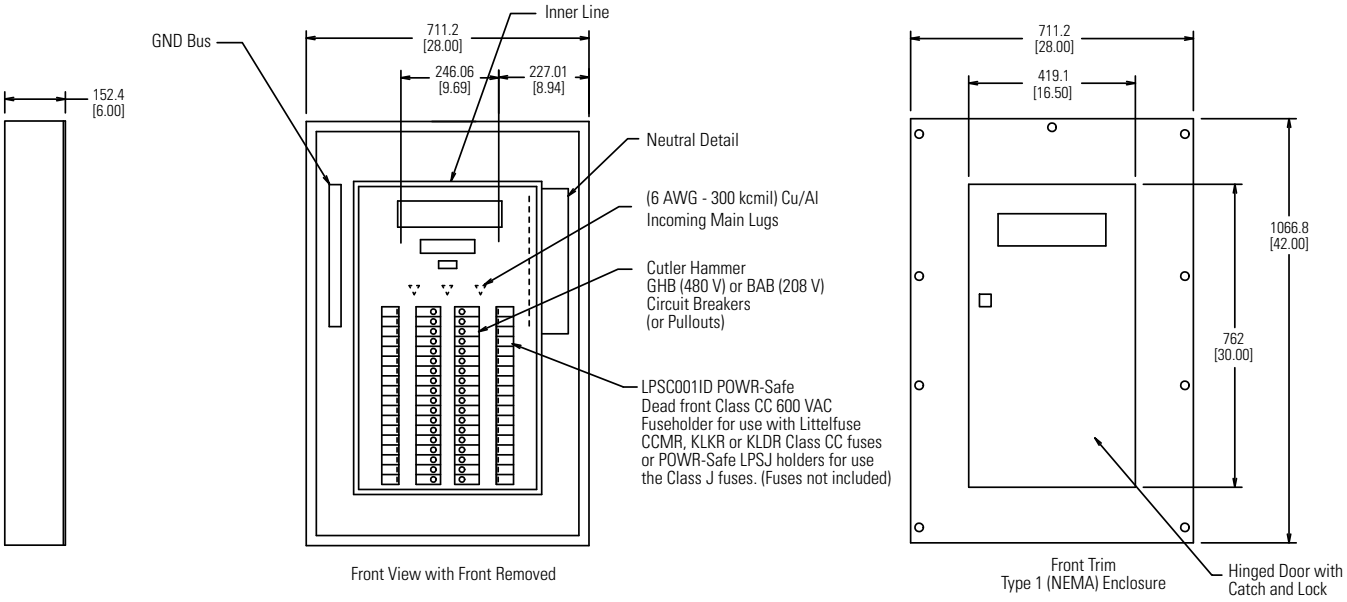

Note: The Littelfuse LCP Series products are custom designed products that fall outside standard specifications.

Dimensions may change depending on panel components.
More specialized configurations are also available.
Contact factory for more information.

LPS SERIES SHUNT TRIP DISCONNECT SWITCH



Description

The Littelfuse® LPS Series provides a simple and economical solution for applications that require selective coordination and shunt trip capabilities.

Utilizes Class J time-delay fuses that are easily coordinated with other system overcurrent devices. The shunt trip capability allows the LPS Series to meet the ANSI/ASME standard that requires power to be automatically disconnected before water is turned on by the fire safety system.

Applications

- Elevator circuits
- Data processing rooms
- Building emergency systems

Web Resources

Download technical information: **Littelfuse.com/LPS**

Specifications (Disconnect Switch)

Supply Voltage Rating*	208 V, 240 V, 480 V
Ampere Range	30 A, 60 A, 100 A, 200 A, 400 A
Enclosures	NEMA 1 (standard) NEMA 3R, NEMA 4, NEMA 12 (optional)
Approvals	UL Listed (File: E219511)

*Contact factory for 600 V options.

Specifications (Shunt Trip)

Voltage Rating	120 V, 60 Hz
Max Inrush	4 A
Max On time	1.5 cycles
Momentary Inrush	140 VA
SCCR	Refer to Operations and Maintenance Manual*

*Contact factory for 400 A panel SCCR

Features/Benefits

- Pre-engineered single unit, which makes procurement easier than systems with multiple components
- Reduces labor costs up to 66% and total installation costs by over 30%
- Pre-installed UL Listed Class J fuse holder – unique Class J size eliminates the need for any rejection type fuse clips
- Optional features offer flexibility for a variety of applications
- Color coded control power terminal blocks
- UL Listed package
- Cu and Al wire rated
- Pre-wired control circuits lower installation time
- Lockable operating handle meets all code and safety requirements (accepts up to 3 locks)
- Every unit is fully tested before delivery

Options

- Control power transformer with fuses and blocks
- Fire safety interface relay
- Key to test switch
- Pilot light "On"
- Isolated neutral lug
- Mechanical interlock auxiliary contact for hydraulic elevators with automatic recall (5 amp 120 V ac rated)
- Fire alarm voltage monitoring relay
- Enclosure
- Surge Protection Device
- Option to bypass alarm when performing maintenance (-AZ option)
- XPress-Ship™ service offers 48 hours direct shipment service on select fully loaded LPS Series Shunt Trip Disconnect Switches

© 2023 Littelfuse, Inc.

LPS SERIES SHUNT TRIP DISCONNECT SWITCH

Ordering Information

Complete catalog numbers consist of switch catalog numbers and the desired options. See example below.

Example Catalog Number from Desired Options

LPS1 T20 R1 K G N1 B F3 U S -AZ = Littelfuse Catalog Number LPS1T20R1KGN1BF3US-AZ

LITTELFUSE SWITCH CATALOG NUMBER		CONTROL POWER TRANSFORMER STD. 100 VA WITH PRI & SEC FUSE (120 V SEC.)		"FIRE SAFETY INTERFACE RELAY (3 PDT, 10 A, 120 V)		KEY TO TEST SWITCH		PILOT LIGHT "ON"		ISOLATED NEUTRAL LUG		MECHANICAL INTERLOCK AUX. CONTACT FOR HYDRAULIC ELEVATORS WITH AUTOMATIC RECALL (5 A,120 V AC)		FIRE ALARM SHUNT TRIP VOLTAGE MONITORING RELAY		OPTIONAL ENCLOSURE		SURGE PROTECTION DEVICE	AZ OPTION (BYBASS FIRE ALARM DURING MAINTENANCE TEST)
REQUIRED		REQUIRED		REQUIRED		OPTIONAL		OPTIONAL		OPTIONAL		REQUIRED		REQUIRED		OPTIONAL		OPTIONAL	OPTIONAL**
BASE	RATING	RATING	OPTION CODE	RATING	OPTION CODE	RATING	OPTION CODE	RATING	OPTION CODE	RATING	OPTION CODE	RATING	OPTION CODE	RATING	OPTION CODE	RATING	OPTION CODE	OPTION CODE	OPTION CODE
LPS3*	30 A	208 V	T20	24 V dc Coil	R2	120 V	K	Red	R	30 A	N6	1 NO & 1 NC	A	1-Pole	F1	NEMA 3R	U	S	-AZ
LPS6*	60 A	240 V	T24	120 V ac Coil	R1			Green	G	60 A	N6	2 NO & 2 NC	B	3-Pole	F3	NEMA 4	Y		
LPS1*	100 A	480 V	T48					White	W	100 A	N1					NEMA 12	Z		
LPS2*	200 A									200 A	N2								
LPS4*	400 A									400 A	N4								

*Part Numbers: Any voltage can be paired with any amperage. Options can be any combination but the ratings must match the option code. Not all options are required. Contact factory for 600 V control power transformer option.

** All switches with "-AZ" option automatically include option codes B and F3. The B and F3 option codes are not used in part number system but will be included in the unit.

Note: When ordering - desired options must be listed in the order shown above. Typical options include Control Power Transformer, Fire Safety Interface Relay, Mechanical Interlock Auxiliary Contact and Fire Alarm Voltage Monitoring Relay.

Dimensions of Enclosure

CATALOG SERIES	AMPERE RATING	NEMA 1 DIMENSIONS	NEMA 3R DIMENSIONS	NEMA 4, 12 DIMENSIONS	LUG SIZE	SHIPPING WEIGHT (LBS)
LPS3	30	24"H x 20"W x 9"D	24"H x 20"W x 8"D	24"H x 20"W x 10"D	#14 - #8 AL or CU	75
LPS6	60	24"H x 20"W x 9"D	24"H x 20"W x 8"D	24"H x 20"W x 10"D	#14 - #2 AL or CU	75
LPS1	100	24"H x 20"W x 9"D	24"H x 20"W x 8"D	24"H x 20"W x 10"D	#8 - 1/0 AL or CU	75
LPS2	200	30"H x 20"W x 9"D	30"H x 24"W x 8"D	30"H x 20"W x 10"D	#6 - 250 kcmil AL or CU	85, 115*, 120**
LPS4	400	48"H x 36"W x 10"D	48"H x 36"W x 12"D	48"H x 36"W x 10"D	(2) 250 kcmil - 3/0 AL or CU	225

* NEMA 3R
** NEMA 4 & NEMA 12
Note: Over-size enclosures used to accommodate control power transformer, interface relay and terminal blocks.

XPress-Ship™

US Only

Littelfuse XPress-Ship™ service offers 48 hours** direct-shipment service on select fully-loaded LPS Series Shunt Trip Disconnect Switches to meet your urgent system requirements on time.

XPress-Ship™ switches include three JTD_ID Series fuses rated at the device's maximum ampacity.

AMPERE RATING	VOLTAGE RATING	CATALOG NUMBER	XPress-Ship™ ORDERING NUMBER
60 A	208 V	LPS6T20R1KGN6BF3-AZ	XPS6T20R1KGN6F3-AZ*
60 A	480 V	LPS6T48R1KGN6BF3-AZ	XPS6T48R1KGN6F3-AZ*
100 A	208 V	LPS1T20R1KGN1BF3-AZ	XPS1T20R1KGN1F3-AZ*
100 A	480 V	LPS1T48R1KGN1BF3-AZ	XPS1T48R1KGN1F3-AZ*
100 A	480 V	LPS1T48R1KGN1BF3	XPS1T48R1KGN1BF3
200 A	208 V	LPS2T20R1KGN2BF3-AZ	XPS2T20R1KGN2F3-AZ*
200 A	480 V	LPS2T48R1KGN2BF3	XPS2T48R1KGN2BF3

AZ option includes B & F3 options.

***XPress-Ship™ 48 hour service requires ordering from XPress-Ship™ Ordering Numbers shown above and is subject to a maximum of any combination of three switches per customer order. XPress-Ship™ service offers 48 hour shipment from the factory through standard ground transportation. For expedited delivery, contact your local Littelfuse Representative.*

© 2023 Littelfuse, Inc.

LPS SERIES SHUNT TRIP DISCONNECT SWITCH

Shunt-Trip Operation

The disconnecting means is a shunt-trip operated switch. The control power source for the shunt-trip operator is a 120 V ac supply originating in the Littelfuse LPS Series disconnect. Current to the shunt-trip device is switched by an isolation relay, which is in turn controlled by the FACP (Fire Alarm Control Panel).

The control signal may be either 24 V dc from the FACP (option R2) or a "dry" contact closure in the FACP (option R1). In the case of a "dry" contact closure, the sensing voltage is 120 V ac originating in the Littelfuse LPS Series disconnect.

CAUTION: When using the "dry" contact closure, option R1, DO NOT supply 120 V ac from the FACP as equipment damage or personnel injury may occur.

A key test option (option K) is available to test the shunt-trip circuit.

Supervisory Indication

Additionally, an optional separate relay can be specified to monitor the 120 Vac control power source in the Littelfuse LPS Series disconnect. This relay (option FR) is used to provide supervisory indication of "Control Power Available" as required by NFPA 72 Section 6.15.4.4.

SCCR Table

CURRENT RATING	INTERRUPTING RATINGS (KA)			
	208 V AC	240 V AC	480 V AC	600 V AC
30A	150	150	65	25
60A	150	150	65	25
100A	150	150	65	25
200A	150	150	65	25

Fuse Table

DISCONNECT SWITCH VOLTAGE/TRANSFORMER TYPE	PRIMARY FUSES (2)		SECONDARY FUSE (1)		SPD PART NUMBER
	FUSE TYPE	FUSE RATING (AMPS)	FUSE TYPE	FUSE RATING (AMPS)	
208/120 V ac	KLDR001	1	FLM1.12	1-1/8	SPD2-150-3P0-R
240/120 V ac	KLDR.500	1/2	FLM1.12	1-1/8	SPD2-150-3P0-R
480/120 V ac	KLDR.400	4/10	FLM1.12	1-1/8	SPD2-350-3P0-R
600/120 V ac	KLDR.250	1/4	FLM1.12	1-1/8	SPD2-480-3P0-R

All Littelfuse LPS Series disconnect switches are UL Listed and designed for safe access by qualified personnel. When maintenance or shutdown service is required, no energized parts are exposed inside the enclosure when the disconnect switch is manually turned to the OFF position. For proper maintenance safety precautions, always turn off incoming power to the Littelfuse LPS Series switch when possible. When servicing any live electrical equipment, always wear appropriate personal protective equipment.

Power Wiring Torque Specifications

CHARACTERISTICS	LPS3	LPS6	LPS1	LPS2	LPS4
Amps	30	60	100	200	400
MCS Wire Size	14 - 1/0	14 - 1/0	14 - 1/0	4 - 300 kcmil	(2) 3/0 - 250 kcmil
Molded Case Switch (MCS) Mfr.	ABB	ABB	ABB	ABB	ABB
MCS Catalog No.	XT2HU3125DFF000XXX	XT2HU3125DFF000XXX	XT2HU3125DFF000XXX	XT4HU3250DFF000XXX	T5H400DWS4
MCS Lug Type	KXT2CUAL1	KXT2CUAL1	KXT2CUAL1	KXT4CUAL2C	KT5400-3
MCS Lug Torque (in-lbs)	50 in-lb*	50 in-lb*	50 in-lb*	200 in-lb*	275 in-lb*
Fuse Block Mfr.	LITTELFUSE	LITTELFUSE	LITTELFUSE	LITTELFUSE	LITTELFUSE
Fuse Block Catalog No.	LFJ60030-3	LFJ60060-3	LFJ60100-3	LFJ60200-3	LFJ60400-3
Fuse Lug Torque (in-lbs)	25 in-lb†	45 in-lb†	120 in-lb†	275 in-lb†	275 in-lb†
Neutral Lug Mfr.	LITTELFUSE	LITTELFUSE	LITTELFUSE	LITTELFUSE	LITTELFUSE
Neutral Lug Catalog No.	LS21211	LS21211	LS21211	LS31231	LS455712
Neutral Lug Torque (in-lbs)	35 in-lb†	45-120 in-lb†	120 in-lb†	275 in-lb†	500 in-lb†
Ground Lug Mfr.	PANDUIT	PANDUIT	PANDUIT	PANDUIT	PANDUIT
Ground Lug Catalog No.	LAMA 1/0-14-Q	LAMA 1/0-14-Q	LAMA 1/0-14-Q	LAMA 250-56-Q	LAMA 350-38-Q
Ground Lug Torque	25 in-lb‡	45 in-lb‡	120 in-lb‡	275 in-lb‡	275 in-lb‡

Note: Torque specs apply only to wire compression screws. Other requirements may exist for attachment of lugs and accessories to these devices. See manufacturer data.

*Per ABB.com
† Littelfuse Device nameplate data.
‡ Panduit, "Torque Chart for Aluminum Mechanical Connectors".

 © 2023 Littelfuse, Inc.

Section Overview

System overvoltage is a growing concern in the electrical industry. Component miniaturization has resulted in increased sensitivity to many devices. The majority of these devices are unable to handle high currents that result from Electrostatic Discharge (ESD) and other voltage transients. Littelfuse® offers a broad range of overvoltage protection to safeguard against these conditions.







SUPPRESSION PRODUCTS

Table of Contents

Industrial Varistor Products 272

LVSP Series Surge Suppression Fuses 274

BVSP Series Surge Protection Device 276

OVERVOLTAGE SUPPRESSION PRODUCTS

Varistors, Surge Fuses and Varistor Assemblies



What Are Transients?

Transients are short duration surges of electrical energy that result from the sudden release of previously stored energy. In terms of electrical and electronic circuits, this energy can be released through intentional, controlled switching action, or induced into a circuit from external sources. If the voltage magnitude of the transient is large enough, circuit component damage or malfunction of the circuit may result.

Transient Sources and Magnitude

	VOLTAGE	CURRENT	RISE-TIME	DURATION
Lightning	25 kV	20 kA	10 µs	50 ms
Switching	600 V	500 A	50 µs	500 ms
EMP	300 kV	10 A	20 ns	1 ms
ESD	15 kV	30 A	1-5 ns	100 ns

Transient Voltage Scenarios

The switching of inductive loads generates high energy transients that increase in magnitude with increasingly heavy loads. When the inductive load is switched off, the collapsing magnetic field is converted into electrical energy, which takes the form of a double exponential transient. Depending on the source, these transients can be as large as hundreds of volts and hundreds of amps with duration times of 400 milliseconds.

Typical sources of inductive transients are:

- Generators
- Motors
- Relays
- Transformers

These examples are extremely common in electrical and electronic systems. Because the sizes of the loads vary according to the application, the wave shape, duration, peak current, and peak voltage are all variables which exist in real world transients. Once these variables can be approximated, a suitable suppressor technology can be selected.

Overvoltage Applications

- Industrial, High Energy AC Products such as Solenoids, Motor Drives and Robotics
- Telecommunications Products
- UPS, AC Panels, Power Supplies, Circuit Breakers (TVSS Products)
- Portable and Automotive Electronic Equipment

Lightning Induced Transients

Transients induced by lightning are not the result of a direct strike. When a lightning strike occurs, the event creates a magnetic field which can induce transients of large magnitude in nearby electrical cables.

Technological Solutions for Transient Threats

Because of the various types of transients and applications, it is necessary to employ protection devices with different characteristics in different applications. Littelfuse offers the broadest range of circuit protection technologies.

Overvoltage Protection Portfolio Includes:

MOVs (Metal Oxide Varistors)

A ceramic technology that offers medium to very high energy ratings for a wide range of applications. Available in screw terminal, radial, square and axial leaded connections.

Discrete TVS Diode

This Silicon Avalanche Diode Technology is available in surface mount and axial leaded packages. It offers protection from medium to very high energy transients and can be used in wide range of applications.

© 2023 Littelfuse, Inc.

OVERVOLTAGE SUPPRESSION PRODUCTS

Varistors, Surge Fuses and Varistor Assemblies

Radial Leaded MOV

SERIES NAME[1]		OPERATING AC VOLTAGE RANGE	OPERATING DC VOLTAGE RANGE	PEAK CURRENT RANGE[2] (A)	PEAK ENERGY RANGE[3]	OPERATING TEMPERATURE RANGE	MOUNT/ FORM FACTOR	DISC SIZE	AGENCY				ROHS	LEAD FREE
									UL	CSA	VDE	CECC		
TMOV®/iTMOV®		115-750	—	6000-10,000	35-480	-55 to +85°C	Radial Leaded	14, 20, 34 mm	•	•	•	•	•	•
TMOV® 25S		115-750	—	20,000	170-670			25 mm	•				•	•
UltraMOV™		130-625	170-825	1750-10,000	12.5-720			7, 10, 14, 20, 25 mm	•	•	•	•	•	•
UltraMOV™ 25S		115-750	150-970	22,000	230-890			25 mm	•	•	•	•	•	•
C-III		130-660		3500-9000	40-530			10, 14, 20 mm	•	•	•		•	•
LA		130-1000	175-1200	1200-6500	11-360			7, 10, 14, 20 mm	•	•	•	•	•	•
ZA		4-460	5.5-615	50-6500	0.1-52			5, 7, 10, 14, 20 mm	•		•	•	•	•

Industrial High Energy Terminal MOV

SERIES NAME[1]		OPERATING AC VOLTAGE RANGE	OPERATING DC VOLTAGE RANGE	PEAK CURRENT RANGE[2] (A)	PEAK ENERGY RANGE[3]	OPERATING TEMPERATURE RANGE	MOUNT/ FORM FACTOR	DISC SIZE	AGENCY		ROHS	LEAD FREE
									UL	CSA		
BA/BB		130-2800	175-3500	50,000 70,000	450-10,000	-55 to +85°C	Screw / Clip Terminals	60 mm	•		•	
DA/DB		130-750	175-970	40,000	270-1050			40 mm	•		•	•
HA		130-750	175-970	25,000 40,000	200-1050		Industrial Packaged Radial Leads	32, 40 mm	•	•	•	•
TMOV34S®		115-750	—	40,000	235-1050			34 mm	•		•	•
HB34, HG34, HF34		130-750	175-970	40,000	270-1050			34 mm	•	•	•	•
DHB34		250-2800	330-3500	20,000 70,000	330-10,000			34 mm			•	
CA		250-2800	330-3500	20,000 70,000	330-10,000		Bare Disc	60 mm			•	

High Power TVS Diodes

SERIES NAME[1]		PACKAGE TYPE	REVERSE STANDOFF VOLTAGE (V_R)	PEAK PULSE POWER RANGE [1] (P_{PP})	PEAK PULSE CURRENT (I_{PP} 8x20µs)	OPERATING TEMPERATURE	HALOGEN FREE	ROHS COMPLIANT
15KPA		P600	17-280	15,000 W	Not Applicable	-85° to +302° F (-55° to +175° C)	•	•
20KPA		P600	20.0-300	20,000 W			•	•
30KPA		P600	28.0-288	30,000 W			•	•
AK6		Radial Lead	58-430	NA	6,000 A	-67° to +347° F (-55° to +150° C)	•	•
AK10		Radial Lead	58-430	NA	10,000 A		•	•

1. Detailed information about most product series listed here can be found on littelfuse.com/varistor
2. Not an applicable parameter for Crowbar devices
3. Value shown in Joules

LVSP SURGE SUPPRESSION FUSE

600 V ac • 5–100 kA 8/20 µs



Description

The Littelfuse Varistor Protection (LVSP) Fuses are intended for the protection of TVSS products. The LVSP series has been designed to survive 8/20 µs lightning surges without opening. This allows the TVSS to perform the necessary suppression. The LVSP is not rated for continuous current and the ratings are specific 8/20 µs surge capability.
The LVSP series can be used to facilitate TVSS module compliance to UL 1449 in permanently connected applications (abnormal overvoltage, unlimited current conditions).

Features/Benefits

- Very current limiting under AC short-circuit conditions
- Available in multiple mounting configurations (cartridge, bolt-in, PC board mount)
- Provides short circuit protection in TVSS systems and complements the Littelfuse line of overvoltage products (HA, HB34, TMOV® and iTMOV® varistors as well as the AK-10 series TVS diodes)

Applications

- TVSS products
- Surge Protective Devices

Specifications

Voltage Rating	600 V ac
Interrupting Rating	200 kA
Surge Withstand Rating	5–100 kA 8/20 µs surge withstand
Approvals	UL Recognized (File: E71611)
Environmental	RoHS Compliant
Applicable Standards	UL 248-1

Recommended Fuse Blocks

LVSP (5-20)-2
L60030M (open block) • LPSM (dead front)

LVSP (30-80)-2
LFJ60030 (open block) • LFPSJ30 (dead front)

LVSP (100)
LFJ60100 (open block)

Web Resources

Download other technical information:
littelfuse.com/LVSP

Electrical Specifications

SURGE RATING (KA 8/20 µs)	RATING CODE	VOLTAGE RATING (V)	INTERRUPT RATING (KA)	CARTRIDGE		LEADED		BOLT-IN		NOMINAL MELTING I²T (A²S)	NOMINAL CLEARING I²T (A²S)	Ipeak@100 kA 60 Hz (A)
				CATALOG NUMBER	ORDERING NUMBER	CATALOG NUMBER	ORDERING NUMBER	CATALOG NUMBER	ORDERING NUMBER			
5	0005	600	200	LVSP5-2	LVSP0005TX2	LVSP5-R	LVSP0005TXR	–	–	359	981	3,700
10	0010	600	200	LVSP10-2	LVSP0010TX2	LVSP10-R	LVSP0010TXR	–	–	1,300	3,210	5,823
15	0015	600	200	LVSP15-2	LVSP0015TX2	LVSP15-R	LVSP0015TXR	–	–	3,267	6,235	7,765
20	0020	600	200	LVSP20-2	LVSP0020TX2	LVSP20-R	LVSP0020TXR	–	–	4,940	11,710	8,135
30	0030	600	200	LVSP30-2	LVSP0030TX2	–	–	LVSP30	LVSP0030T	11,950	35,325	12,478
40	0040	600	200	LVSP40-2	LVSP0040TX2	–	–	LVSP40	LVSP0040T	20,550	61,700	15,250
60	0060	600	200	LVSP60-2	LVSP0060TX2	–	–	LVSP60	LVSP0060T	39,240	145,555	19,604
80	0080	600	200	LVSP80-2	LVSP0080TX2	–	–	LVSP80	LVSP0080T	75,000	254,000	24,600
100	0100	600	200	–	–	–	–	LVSP100-L	LVSP0100VXL	160,747	413,000	36,600

© 2023 Littelfuse, Inc.

LVSP SURGE SUPPRESSION FUSE

Dimensions Inches (mm)

Cartridge 5-20 kA

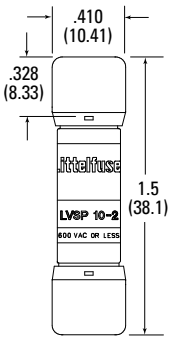

Leaded 5-20 kA

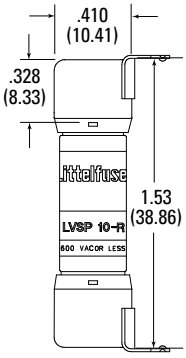

Cartridge 30-80 kA

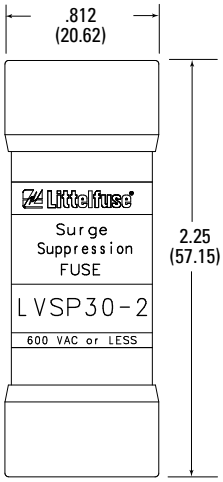

Bolt-In 30-80 kA

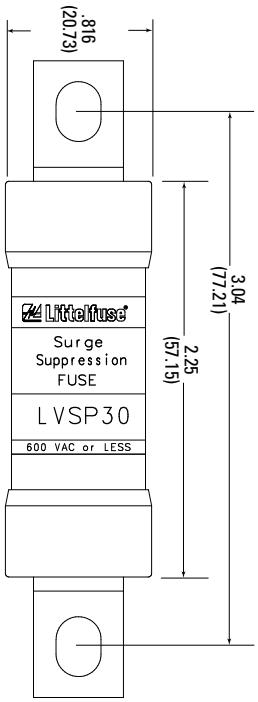

Bolt-In 100 kA

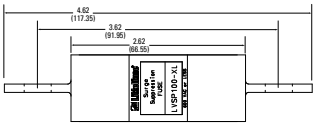

BVSP SERIES SURGE PROTECTION DEVICE

600 Vac • 10 kA



Specifications

Voltage Rating 600 Vac
Interrupting Rating 200 kA
Ratings 10 kA 8 x 20 µs surge withstand

Ordering Information

SERIES	8 X 20 µS SURGE RATING (A)	PACKAGE QUANTITY	MOUNTING METHOD	CATALOG NUMBER	ORDERING NUMBER
BVSP	10,000	10	Ferrule	BVSP10-2	BVSP0010TX2
BVSP	10,000	10	PCB Tabs	BVSP10-R	BVSP0010TXR

Electrical Specifications

CATALOG NUMBER	8 X 20 µS SURGE RATING (A)	NOMINAL MELTING I^2T (A^2S)	NOMINAL CLEARING I^2T (A^2S)	Ipeak @ 200 kA 60 HZ (A)
BVSP10-2	10,000	1,580	9,960	8,160
BVSP10-R	10,000	1,580	9,960	8,160

Dimensions Inches (mm)

Ferrule Version

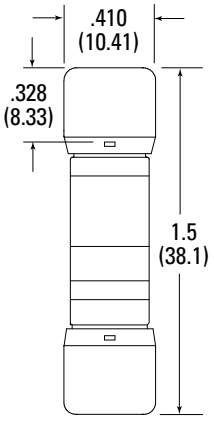

PCB Version

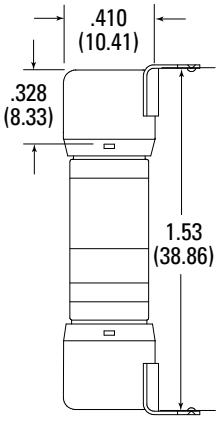

Description

The Littelfuse® BVSP surge protection device (SPD) is intended for the protection of transient voltage surge suppressions (TVSS) systems. The BVSP series has been designed to survive the 8 x 20 µs lightning surges described in various standards (UL 1449, IEC 61000-4-5 and IEEE C62.41) without opening. This allows the TVSS to perform the necessary suppression. The BVSP is not rated for continuous current and the ratings are specific 8 x 20 µs surge capability. The BVSP series can be used to facilitate TVSS module compliance to UL 1449 in permanently connected applications (abnormal overvoltage, unlimited current conditions).

Features/Benefits

- Very current limiting under AC short-circuit conditions
- Available in ferrule and printed circuit board (PCB) configurations
- Provides short circuit protection in TVSS systems and complements the Littelfuse line of overvoltage products (HA, HB34, TMOV® and iTMOV® varistors as well as the AK-10 series TVS diodes)

Applications

- TVSS products
- Surge arrestors

Recommended Fuse Holders

L60030M (open block) 107
LPSM (dead front) 117

© 2023 Littelfuse, Inc.

Section Overview

Miscellaneous Accessories include custom-built solutions designed specifically to meet code requirements, fuse reducers, box cover units and an assortment of useful fuse and holder accessories.







MISCELLANEOUS PRODUCTS

Table of Contents

Fuse Reducers 278

Box Cover Units 279

Fuse Replacement & Custom Kits 280

Electronic Fuse Display & Spare Fuse Cabinet..... 281

© 2023 Littelfuse, Inc.

FUSE REDUCERS



Ordering Information

250 Volt

CATALOG/ORDERING NUMBER		FUSE CLIP	FUSE CASE SIZE
CLASS H/K5	CLASS R		
LRU 263	LRU 263 R	60 A	30 A
LRU 213	LRU 213 R	100 A	30 A
LRU 216	LRU 216 R	100 A	60 A
LRU 226	LRU 226 R	200 A	60 A
LRU 2621	LRU 2621 R	200 A	100 A
LRU 2641	LRU 2641 R	400 A	100 A
LRU 2642	LRU 2642 R	400 A	200 A
LRU 2661	LRU 2661 R	600 A	100 A
LRU 2662	LRU 2662 R	600 A	200 A
LRU 2664	LRU 2664 R*	600 A	400 A

*Only one reducer required.

600 Volt

CATALOG /ORDERING NUMBER			FUSE CLIP	FUSE CASE SIZE
CLASS H/K5	CLASS R	CLASS J		
LRU 663	LRU 663 R	LRUJ63	60 A	30 A
LRU 216	LRU 216 R	LRUJ13	100 A	30 A
LRU 616	LRU 616 R	LRUJ16¶	100 A	60 A
LRU 626	LRU 626 R	LRUJ26	200 A	60 A
LRU 2621	LRU 2621 R	LRUJ21	200 A	100 A
LRU 2641	LRU 2641 R	LRUJ41	400 A	100 A
LRU 2642	LRU 2642 R	LRUJ42	400 A	200 A
LRU 2661	LRU 2661 R	—	600 A	100 A
LRU 2662	LRU 2662 R	—	600 A	200 A
LRU 2664	LRU 2664 R†	LRUJ64	600 A	400 A

†Only one reducer required.

¶Fuse and reducer combination is slightly larger in diameter than 100 A Class J fuses. For specific applications, contact factory.
Class J reducers cannot be used in bolt-on applications.

Description

Littelfuse® fuse reducers allow smaller size fuses to be installed into existing fuse clips to prevent overfusing.

Features/Benefits

- Simple installation
- Reduces inventory requirements
- Silver brazed joints for maximum strength
- UL Listed (File: E136855)
- CSA Certified (File: LR92899)

Web Resources

Download technical information: **littelfuse.com/lruh**
littelfuse.com/lrur
littelfuse.com/lruj

Dimensions

Refer to the fuse section of this catalog for fuse dimensions.

Recommended Fuses

Class H/K5 Fuse Reducers

NLN / NLS 20

Class R Fuse Reducers

FLNR / FLSR 17
FLNR_ID / FLSR_ID 17
IDSR 16
LLNRK / LLSRK 13
LLSRK_ID 13
KLNR / KLSR 15

Class J Fuse Reducers

JTD_ID / JTD 21
JLS 22

 © 2023 Littelfuse, Inc.

BOX COVER UNITS



Description

Provide economical method of protecting small motors against overcurrent damage.

Applications

- Edison-Base plug fuses (TOO, TLO)
- Type S plug fuses (SOO, SLO) with adapters (SAO)

Specifications

Voltage Rating 125 V
Max Ampere Rating 15 A
Approvals UL Listed parts (Except LSSY-RL)

Web Resources

Sample requests, downloadable CAD drawings and other technical information: **www.littelfuse.com/boxcover**

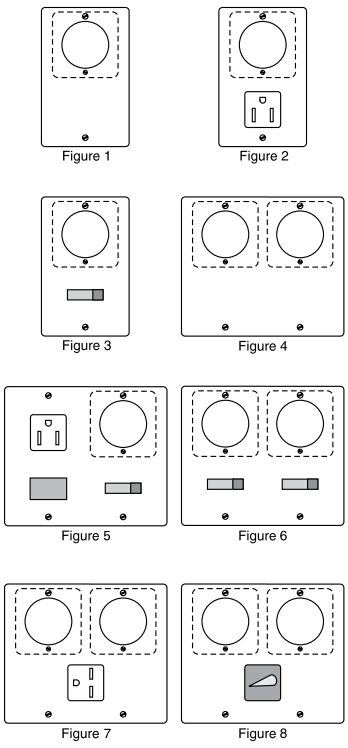

FIGURE NUMBER	LITTELFUSE PART NUMBER	BOX COVER FEATURES					TO BE MOUNTED ON
		EDISON BASE FUSE HOLDER	GROUNDING RECEPTACLE	SINGLE POLE SWITCH	TWO POLE SWITCH	PILOT LIGHT	
1	LSOU	1	—	—	—	—	2-1⁄4" Handy Box
	LSOW	1	—	—	—	—	2-3⁄4" Switch Box
	LSOX	1	—	—	—	—	4" Octagon Box
	LSOY	1	—	—	—	—	4" Square Box
2	LSRU*	1	1	—	—	—	2-1⁄4" Handy Box
	LSRW	1	1	—	—	—	2-3⁄4" Switch Box
	LSRY	1	1	—	—	—	4" Square Box
3	LSSU*	1	—	1	—	—	2-1⁄4" Handy Box
	LSSW	1	—	1	—	—	2-3⁄4" Switch Box
	LSSX	1	—	1	—	—	4" Octagon Box
	LSSY*	1	—	1	—	—	4" Square Box
4	LSOY-B	2	—	—	—	—	4" Square Box
5	LSSY-RL	1	1	1	—	1	4" Square Box
6	LSCY	2	—	2	—	—	4" Square Box
7	LSKA	2	1 (250V)	—	—	—	4-11⁄16" Square Box
8	LSTY	2	—	—	1	—	4" Square Box

*UL Listed (File No. E308725)

© 2023 Littelfuse, Inc.

FRCK SERIES FUSE REPLACEMENT & CUSTOM KITS



Description

Fuse Replacement and Custom Kits help reduce downtime by providing mobile storage and organization for replacement fuses. The FRCK Series provides a custom solution that can be filled with multiple fuse series that are more common or specific to your needs or application.

Features/Benefits

- Custom sized compartments fit various fuse series
- Large kit features a convenient handle for carrying
- Kits are sold empty for complete customization
- Each kit comes with a blank label on the inside cover so users can write in part numbers or use bar code labels to help with refills.

Web Resources

Additional information: **littelfuse.com/kits**

Ordering Information

KIT SIZE	DIMENSIONS L X W X H (INCHES)	DESCRIPTION	CATALOG NUMBER
Large	16.00 x 12.00 x 10.00	Mobile organizer with 2 small and 3 medium drawers; Unique FRACK Label for Oil & Gas	FRCK-OG
Large	16.00 x 12.00 x 10.00	Mobile organizer with 2 small and 3 medium drawers	FRCK-LG
Medium	14.00 x 9.13 x 2.00	14" organizer with adjustable dividers	FRCK-MD
Small	8.25 x 4.25 x 1.00	8" organizer with up to 6 compartments	FRCK-SM



FRCK-OG & FRCK-LG



FRCK-MD



FRCK-SM

© 2023 Littelfuse, Inc.

FUSE DISPLAYS AND CABINETS

Electronic Fuse Display



Description

This wall-mountable or free-standing modular rack system prominently displays Littelfuse glass and automotive fuses. Additional sections can be quickly snapped on for a larger product selection. Each rack features a cross reference guide to help customers locate the proper replacement fuse.

Features/Benefits

- Holds 720 (144 5-packs) of the most popular glass, ceramic, and automotive fuses
- Designed to save space—measures 14"H × 9"W × 4"D Suitable for wall or counter mounting
- Includes cross reference, product identification guide, and back-up card for easy reordering
- Expandable with modular section that can hold 240 fuses (48 5-packs) per section

Fully stocked rack includes the following parts

3AG (GLASS) FAST ACTING FUSES		3AG (GLASS) SLO-BLO® FUSES	
QUANTITY	CATALOG NUMBER	QUANTITY	CATALOG NUMBER
25	312 ½A	25	313 ½A
50	312 1A	25	313 ¾A
25	312 1 ½A	25	313 1A
75	312 2A	25	313 1 ½A
25	312 2 ½A	50	313 2A
75	312 3A	25	313 2 ½A
25	312 4A	25	313 3A
25	312 5A	25	313 4A
25	312 10A	25	313 5A

3AB (CERAMIC) NORMAL-BLO FUSES		3AB (CERAMIC) SLO-BLO® FUSES	
QUANTITY	CATALOG NUMBER	QUANTITY	CATALOG NUMBER
25	314 15A	25	326 8A
25	314 20A	20	326 10A
25	314 30A	—	—

Ordering Information

TYPE	CATALOG NUMBER	ORDERING NUMBER
Fully Stocked Display	094324PG	00940324ZXPG
Empty Display Rack	FDR001PG	0FDR0001ZXPG
Additional Sections	MRS001PG	0MRS0001ZXPG

Spare Fuse Cabinet



Description

- Steel cabinet with piano hinges that can be locked to prevent unauthorized access. Weather stripped to reduce the accumulation of dust, dirt and moisture
- Convenient inventory card located inside door. Measures 30"H × 24"W × 12"D. Keyhole mounting holes 16" on center for easy installation

Ordering Information

TYPE	CATALOG NUMBER	ORDERING NUMBER
Spare Fuse Cabinet	LSFC	LSFC
Spare Keys	LKEY001	LKEY0001Z

Web Resources

Additional information: **littelfuse.com/lsfc**

© 2023 Littelfuse, Inc.

Section Overview

This Technical Application Guide or 'Fuseology' section provides the information needed to select the correct types of Littelfuse POWR-GARD® fuses for most applications. If there are any questions or if additional data is needed for a specific use, call the Littelfuse Technical Support and Engineering Service Group at **1-800-TEC-FUSE** (1-800-832-3873), email them at **techline@littelfuse.com** or visit us at **littelfuse.com**.







TECHNICAL APPLICATION GUIDE

Table of Contents

Fuseology Fundamentals 283

Selection Considerations 285

Time-current Curves and Peak Let-through Charts 289

Selective Coordination 291

UL/CSA Fuse Classes and Applications 294

Terms and Definitions 296

Motor Protection Tables 303

Condensed Fuse Cross Reference 306

Alphanumeric Index of Catalog Numbers 307



Technical Information

White papers, and a library of technical information is available online at **littelfuse.com/technicalcenter**

© 2023 Littelfuse, Inc.

I. OVERCURRENT PROTECTION FUNDAMENTALS (FUSES AND HOW THEY WORK)

Introduction

An important part of developing quality overcurrent protection is an understanding of system needs and overcurrent protective device fundamentals. This section discusses these topics with special attention to the application of fuses. If you have additional questions, call our Technical Support Group at 1-800-TEC-FUSE (1-800-832-3873). Definitions of terms used in this section are located towards the end of this Technical Application Guide.

Why Overcurrent Protection?

All electrical systems eventually experience overcurrents. Unless removed in time, even moderate overcurrents quickly overheat system components, damaging insulation, conductors, and equipment. Large overcurrents may melt conductors and vaporize insulation. Very high currents produce magnetic forces that bend and twist bus bars. These high currents can pull cables from their terminals and crack insulators and spacers.

Too frequently, fires, explosions, poisonous fumes and panic accompany uncontrolled overcurrents. This not only damages electrical systems and equipment, but may cause injury or death to personnel nearby.

To reduce these hazards, the National Electrical Code® (NEC®), OSHA regulations, and other applicable design and installation standards require overcurrent protection that will disconnect overloaded or faulted equipment.

Industry and governmental organizations have developed performance standards for overcurrent devices and testing procedures that show compliance with the standards and with the NEC. These organizations include: the American National Standards Institute (ANSI), National Electrical Manufacturers Association (NEMA), and the National Fire Protection Association (NFPA), all of which work in conjunction with Nationally Recognized Testing Laboratories (NRTL) such as Underwriters Laboratories (UL).

Electrical systems must meet applicable code requirements including those for overcurrent protection before electric utilities are allowed to provide electric power to a facility.

What is Quality Overcurrent Protection?

A system with quality overcurrent protection has the following characteristics:

1. Meets all legal requirements, such as NEC®, OSHA, local codes, etc.
2. Provides maximum safety for personnel, exceeding minimum code requirements as necessary.
3. Minimizes overcurrent damage to property, equipment, and electrical systems.
4. Provides coordinated protection. Only the protective device immediately on the line side of an overcurrent opens to protect the system and minimize unnecessary downtime.
5. Is cost effective while providing reserve interrupting capacity for future growth.
6. Consists of equipment and components not subject to obsolescence and requiring only minimum maintenance that can be performed by regular maintenance personnel using readily available tools and equipment.

Overcurrent Types and Effects

An overcurrent is any current that exceeds the ampere rating of conductors, equipment, or devices under conditions of use. The term "overcurrent" includes both overloads and short-circuits.

Overloads

An overload is an overcurrent confined to normal current paths in which there is no insulation breakdown.

Sustained overloads are commonly caused by installing excessive equipment such as additional lighting fixtures or too many motors. Sustained overloads are also caused by overloading mechanical equipment and by equipment breakdown such as failed bearings. If not disconnected within established time limits, sustained overloads eventually overheat circuit components causing thermal damage to insulation and other system components.

Overcurrent protective devices must disconnect circuits and equipment experiencing continuous or sustained overloads before overheating occurs. Even moderate insulation overheating can seriously reduce the life of the components and/or equipment involved. For example, motors overloaded by just 15% may experience less than 50% of normal insulation life.

Temporary overloads occur frequently. Common causes include temporary equipment overloads such as a machine tool taking too deep of a cut, or simply the starting of an inductive load such as a motor. Since temporary overloads are by definition harmless, overcurrent protective devices should not open or clear the circuit.

It is important to realize that fuses selected must have sufficient time-delay to allow motors to start and temporary overloads to subside. However, should the overcurrent continue, fuses must then open before system components are damaged. Littelfuse POWR-PRO® and POWR-GARD® time-delay fuses are designed to meet these types of protective needs. In general, time-delay fuses hold 500% of the rated current for a minimum of ten seconds, yet will still open quickly on higher values of current.

© 2023 Littelfuse, Inc.

Even though government-mandated high-efficiency motors and NEMA Design E motors have much higher locked rotor currents, POWR-PRO® time-delay fuses such as the FLSR_ ID, LLSRK_ID, or IDSR series have sufficient time-delay to permit motors to start when the fuses are properly selected in accordance with the NEC®.

Short-Circuits

A short-circuit is an overcurrent flowing outside of its normal path. Types of short-circuits are generally divided into three categories: bolted faults, arcing faults, and ground faults. Each type of short-circuit is defined in the Terms and Definitions section.

A short-circuit is caused by an insulation breakdown or faulty connection. During a circuit's normal operation, the connected load determines current. When a short-circuit occurs, the current bypasses the normal load and takes a "shorter path," hence the term 'short-circuit'. Since there is no load impedance, the only factor limiting current flow is the total distribution system's impedance from the utility's generators to the point of fault.

A typical electrical system might have a normal load impedance of 10 ohms. But in a single-phase situation, the same system might have a load impedance of 0.005 ohms or less. In order to compare the two scenarios, it is best to apply Ohm's Law (I = E/R for AC systems). A 480 volt single-phase circuit with the 10 ohm load impedance would draw 48 amperes (480/10 = 48). If the same circuit has a 0.005 ohm system impedance when the load is shorted, the available fault current would increase significantly to 96,000 amperes (480/0.005 = 96,000).

As stated, short-circuits are currents that flow outside of their normal path. Regardless of the magnitude of overcurrent, the excessive current must be removed quickly. If not removed promptly, the large currents associated with short-circuits may have three profound effects on an electrical system: heating, magnetic stress, and arcing.

Heating occurs in every part of an electrical system when current passes through the system. When overcurrents are large enough, heating is practically instantaneous. The energy in such overcurrents is measured in ampere-squared seconds (I^2t). An overcurrent of 10,000 amperes that lasts for 0.01 seconds has an I^2t of 1,000,000 A^2s. If the current could be reduced from 10,000 amperes to 1,000 amperes for the same period of time, the corresponding I^2t would be reduced to 10,000 A^2s, or just one percent of the original value.

If the current in a conductor increases 10 times, the I^2t increases 100 times. A current of only 7,500 amperes can melt a #8 AWG copper wire in 0.1 second. Within eight milliseconds (0.008 seconds or one-half cycle), a current of 6,500 amperes can raise the temperature of #12 AWG THHN thermoplastic insulated copper wire from its operating temperature of 75°C to its maximum short-circuit temperature of 150°C. Any currents larger than this may immediately vaporize organic insulations. Arcs at the point of fault or from mechanical switching such as automatic transfer switches or circuit breakers may ignite the vapors causing violent explosions and electrical flash.

Magnetic stress (or force) is a function of the peak current squared. Fault currents of 100,000 amperes can exert forces of more than 7,000 lb. per foot of bus bar. Stresses of this magnitude may damage insulation, pull conductors from terminals, and stress equipment terminals sufficiently such that significant damage occurs.

Arcing at the point of fault melts and vaporizes all of the conductors and components involved in the fault. The arcs often burn through raceways and equipment enclosures, showering the area with molten metal that quickly starts fires and/or injures any personnel in the area. Additional short-circuits are often created when vaporized material is deposited on insulators and other surfaces. Sustained arcing-faults vaporize organic insulation, and the vapors may explode or burn.

Whether the effects are heating, magnetic stress, and/or arcing, the potential damage to electrical systems can be significant as a result of short-circuits occurring.

II. SELECTION CONSIDERATIONS

Selection Considerations for Fuses (600 volts and below)

Since overcurrent protection is crucial to reliable electrical system operation and safety, overcurrent device selection and application should be carefully considered. When selecting fuses, the following parameters or considerations need to be evaluated:

- Current Rating
- Voltage Rating
- Interrupting Rating
- Type of Protection and Fuse Characteristics
- Current Limitation
- Physical Size
- Indication

Current Rating

The current rating of a fuse is the AC or DC current, expressed in amperes, which the fuse is capable of carrying continuously under specified conditions. Fuses selected for a circuit must have ampere ratings that meet NEC® requirements, namely those found in NEC® Articles 240 and 430. These NEC® requirements establish maximum ratings and in some cases, minimum ratings. When selecting a fuse, it is generally recommended to select a current rating as close as possible to the system's normal running current.

© 2023 Littelfuse, Inc.

SELECTION CONSIDERATIONS

Voltage Rating

The voltage rating of a fuse is the maximum AC or DC voltage at which the fuse is designed to operate. Fuse voltage ratings must equal or exceed the circuit voltage where the fuses will be installed, and fuses used in DC circuits must be specifically rated for DC applications. In terms of voltage, fuses may be rated for AC only, DC only, or both AC and DC. However, exceeding the voltage ratings or using an AC only fuse in a DC circuit could result in violent destruction of the fuse.

The standard 600 volt rated fuses discussed in this section may be applied at any voltage less than or equal to their rating. For example, a 600 volt fuse may be used in a 277 volt or even a 32 volt system, but not any system exceeding 600 volts.

NOTE: This does not apply to semiconductor fuses and medium voltage fuses. See the semiconductor and medium voltage fuse application information on littelfuse.com for voltage limitations of these fuses.

Interrupting Rating

The interrupting rating of a fuse is the highest available symmetrical rms alternating current that the fuse is required to safely interrupt at its rated voltage under standardized test conditions. A fuse must interrupt all overcurrents up to its interrupting rating without experiencing damage. Standard UL fuses are available with interrupting ratings of 10,000 A, 50,000 A, 100,000 A, 200,000 A, and 300,000 A.

NEC® Article 110.9 requires that all equipment intended to break current at fault levels have an interrupting rating sufficient for the system voltage and current available at the equipment's line terminals. Refer to *Figure 1*. It is vitally important to select fuses with interrupting ratings which equal or exceed the available fault current.

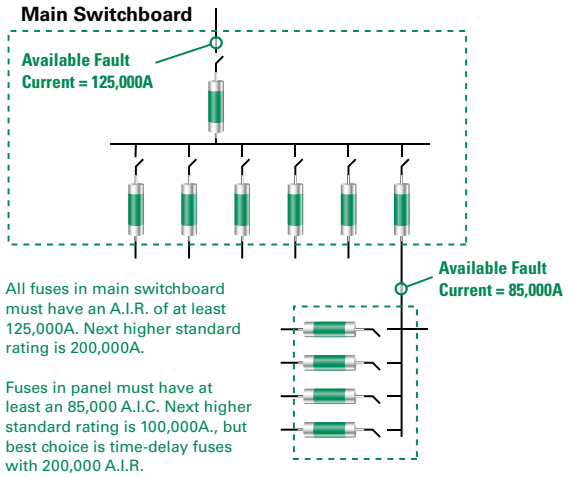

Figure 1 – Interrupting Rating Requirements per NEC

The recommendation to standardize on fuses with at least a 200,000 ampere interrupting rating (AIR) ensures that all fuses have an adequate interrupting rating while providing reserve interrupting capacity for future increases in available fault current.

300,000 AIR Fuses

Littelfuse POWR-PRO® fuse series have a Littelfuse Self-Certified interrupting rating of 300,000 amperes rms symmetrical. The 300,000 ampere testing was performed in a Nationally Recognized Testing Laboratory, and the tests were UL witnessed. UL has ruled that fuses with a UL interrupting rating greater than 200,000 amperes must be marked as "Special Purpose Fuses" and may not be labeled as UL Listed Class RK5, RK1, L, etc.

Type of Protection and Fuse Characteristics

Time current characteristics determine how fast a fuse responds to overcurrents. All fuses have inverse time characteristics; that is, the fuse opening time decreases as the magnitude of overcurrent increases. When properly rated in accordance with NEC® requirements, fuses provide both overload and short-circuit protection to system conductors and components. However, in some instances such as when fuses are used to backup circuit breakers or to provide motor branch circuit short-circuit and ground fault protection, fuses provide only short-circuit protection. A fuse's response to overcurrents is divided into short-circuits and overloads.

Short-Circuits

A fuse's short-circuit response is its opening time on higher-value currents. For power fuses, higher-value currents are generally over 500-600% of the fuse's current rating. As stated earlier, all fuses have inverse time characteristics: the higher the current, the faster the opening time. Since short-circuits should be removed quickly, inverse time is especially important for short-circuit protection.

Overloads

While fuses must disconnect overloaded conductors and equipment before the conductors and components are seriously overheated, they should not disconnect harmless temporary overloads. To provide sufficient overload protection for system conductors, UL has established maximum fuse opening times at 135% and 200% of a fuse's current rating. All UL Listed fuses for application in accordance with the National Electrical Code® must meet these limits whether they are fast-acting or time-delay fuses.

As just stated, a fuse is designed to respond to two types of overcurrents – short circuits and overloads. As a result, selecting the proper fuse for a given application usually involves deciding whether to use a time-delay fuse or a fast-acting fuse. A more in-depth review of both possible scenarios is important at this time.

© 2023 Littelfuse, Inc.

SELECTION CONSIDERATIONS

Fast-Acting (Normal-Opening) Fuses

Fast-acting fuses (sometimes called "Normal-opening" fuses) have no intentional time-delay. Typical opening times at 500% of the fuse ampere rating range from 0.05 second to approximately 2 seconds. Fast-Acting fuses are suitable for non-inductive loads such as incandescent lighting and general-purpose feeders, or branch circuits with little or no motor load. When protecting motors and other inductive loads, fast-acting fuses must be rated at 200-300% of load currents to prevent nuisance opening on in-rush currents. Fuses with such increased ratings no longer furnish adequate protection from overloads and only provide short-circuit protection. Overload relays or other overload protection devices must be provided to properly protect conductors and equipment from overload conditions.

All fast-acting fuses provide fast short-circuit response within their interrupting rating. Some are considered current-limiting, such as UL Class T and Class J. Others are non-current-limiting, such as UL Class H.

Time-Delay (SLO-BLO®) Fuses

Most UL Class CC, CD, G, J, L, RK5 and RK1 fuses, plus some of the UL Listed Miscellaneous fuses are considered time-delay. If so, they are identified as such on the fuse label with the words "Time-Delay", "T-D", "D", or some other suitable marking. Minimum time-delay varies with the fuse class, and to some degree with the fuse ampere rating. UL standards for POWR-GARD® fuse series FLNR, FLNR_ID, FLSR, FLSR_ID, IDSR (UL Class RK5), LLNRK, LLSRK, LLSRK_ID (UL Class RK1), and JTD, JTD_ID (UL Class J) require these fuses to carry 500% rated current for a minimum of 10 seconds. Standards for CCMR and KLDR (UL Class CC and CD) and SLC (UL Class G) fuses require them to carry 200% rated current for a minimum of 12 seconds.

Although there is no UL Classification for time-delay Class L fuses, it is still permissible for them to be marked "Time-Delay." The amount of time-delay is determined by the manufacturer. Littelfuse KLPC series and KLLU series fuses will hold 500% current for 10 seconds or more.

In addition to providing time-delay for surges and short time overloads, time-delay fuses meet all UL requirements for sustained overload protection. On higher values of current, time-delay fuses are current-limiting; meaning they remove large overcurrents in less than one-half cycle (0.00833 seconds). Time-delay fuses provide the best overall protection for both motor and general purpose circuits, and eliminate nuisance fuse opening and most situations of downtime.

Compared to fast-acting fuses, time-delay fuses can be selected with ratings much closer to a circuit's operating current. For example, on most motor circuits Class RK5 and RK1 fuses can be rated at 125-150% of a motor's full load current (FLA). This provides superior overload and short-circuit protection, and often permits the use of smaller, less expensive disconnect switches. Time-delay fuses have gradually replaced most one-time (UL Class K5) and renewable (UL Class H) fuses. Today, more than 50% of all fuses sold by electrical distributors are time-delay fuses.

Dual Element Fuses

Littelfuse time-delay FLNR, FLNR_ID, FLSR, FLSR_ID, IDSR (UL Class RK5), and LLNRK, LLSRK, LLSRK_ID (UL Class RK1), and some JTD, JTD_ID (UL Class J) series fuses have true dual-element construction meaning the fuse has an internal construction consisting of separate short-circuit and overload sections or elements. Time-delay elements are used for overload protection, and separate fast acting fuse elements or links are used to provide current-limiting short-circuit protection.

Very Fast-Acting Fuses

This category of fuses exists for limited applications. The principle use of very fast acting fuses is to protect solid-state electronic components, such as semiconductors. Fuse series designated as 'High-Speed (Semiconductor) Fuses' have special characteristics including quick overload response, very low I^2t and I_{peak} currents, and peak transient voltages, that provide protection for components that cannot withstand line surges, low value overloads, or short-circuit currents. Very fast-acting fuses are designed for very fast response to overloads and short-circuits, and are very current-limiting.

Effect of Ambient Temperature on Fuses

The current carrying capacity of fuses is 110% of the fuse rating when installed in a standard UL test circuit and tested in open air at 25°C ambient. This allows for derating to 100% of rating in an enclosure at 40°C ambient.

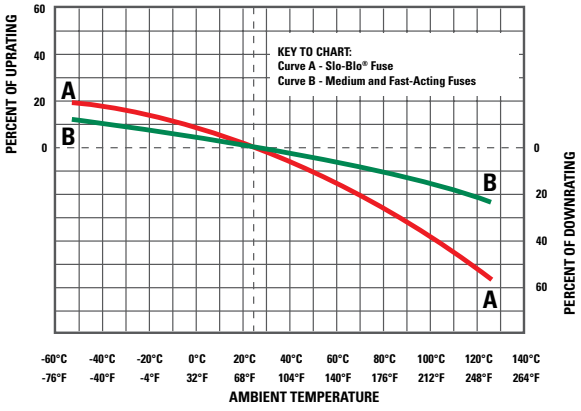

Figure 2 – Fuse Rerating Curve

© 2023 Littelfuse, Inc.

Current Limitation

A current-limiting fuse is one that opens and clears a fault in less than 180 electrical degrees, or in other words, within the first half electrical cycle (0.00833 seconds). See the definition of Current-limiting Fuse and *Figure 13* in the Terms and Definitions section.

NEC® Article 240.2 states that a current-limiting overcurrent protective device must reduce the peak let-through current to a value substantially less than the potential peak current that would have occurred if the fuse were not used in the circuit or were replaced with solid conductors of the same impedance. The total destructive heat energy (I^2t) to the circuit and its components is greatly minimized as a result of using current-limiting fuses.

It is important to note that UL Class H 'Renewable' fuses designed decades ago are considered non-current limiting. Other than Midget fuses, almost all other fuse types used in today's electrical systems and applications are considered current-limiting per the above parameters. This selection consideration now involves determining the degree or level of current limitation required to properly protect a given device or system.

It is also important to point out that matching fuse holders and/or fuse blocks must reject non-current-limiting fuses and accept only current-limiting fuses of the stated UL Class.

Physical Size

While often overlooked, the physical size or overall dimensions of the fuse to be used in a given application is another important selection consideration to evaluate. There is a trend toward reduction of size in almost everything, and electrical equipment is no exception. Fuse size is actually determined by the size and dimensions of the fuse block or disconnect switch in which it is installed.

While saving space may be an important factor when selecting the proper fuses, other considerations should not be overlooked. Some of these include:

- Does the smallest fuse have the most desirable characteristics for the application?
- Does the equipment in which the fuse will be installed provide adequate space for maintenance?
- Do smaller fuses coordinate well with the system's other overcurrent protection?

If looking at just physical dimensions, a 600 volt, 60 ampere, 200,000 AIR, time-delay, dual-element UL Class CD fuse is smaller than a similarly rated UL Class J fuse, which is in turn, considerably smaller than a similarly rated UL Class RK1 or Class RK5 fuse. However, smaller-sized fuses can sometimes have less time-delay or more nuisance openings than their larger counterparts, so it is always important to consider all factors involved.

Indication

The newest consideration for selecting the best fuse for a given application is indication. Many of the more commonly used UL fuse classes are now available in both indicating and non-indicating versions. Built-in, blown-fuse indication that quickly identifies which fuse or fuses within an electrical panel or system have blown can be found on the Littelfuse POWR-PRO® LLSRK_ID Class RK1, FLNR_ID, FLSR_ID and IDSR Class RK5, and JTD_ID Class J fuse series.

The indicating feature on these fuses provides reduced downtime, increased safety, and reduced housekeeping or troubleshooting headaches and delays. Littelfuse Indicator® fuses will help lower the costs associated with downtime, provide longer fuse life by minimizing nuisance openings, increase system performance by minimizing equipment damage, and improve safety by minimizing accidents.

III. GENERAL FUSING RECOMMENDATIONS

Based on the above selection considerations, the following is recommended:

Fuses with ampere ratings from 1/10 through 600 amperes

- When available fault currents are less than 100,000 amperes and when equipment does not require the more current-limiting characteristics of UL Class RK1 fuses, FLNR and FLSR_ID Series Class RK5 current-limiting fuses provide superior time-delay and cycling characteristics at a lower cost than RK1 fuses. If available fault currents exceed 100,000 amperes, equipment may need the additional current-limitation capabilities of the LLNRK, LLSRK and LLSRK_ID series Class RK1 fuses.
- Fast-acting JLLN and JLLS series Class T fuses possess space-saving features that make them especially suitable for protection of molded case circuit breakers, meter banks, and similar limited-space applications.
- Time-delay JTD_ID and JTD series Class J fuses are used in OEM motor control center applications as well as other MRO motor and transformer applications requiring space-saving IEC Type 2 protection.
- Class CC and Class CD series fuses are used in control circuits and control panels where space is at a premium. The Littelfuse POWR-PRO CCMR series fuses are best used for protection of small motors, while the Littelfuse KLDR series fuses provide optimal protection for control power transformers and similar devices.

For questions about product applications, call our Technical Support Group at 800-TEC-FUSE.

© 2023 Littelfuse, Inc.

Fuses with ampere ratings from 601 through 6,000 amperes

For superior protection of most general-purpose and motor circuits, it is recommended to use the POWR-PRO® KLPC series Class L fuses. The Class L fuses are the only time-delay fuse series available in these higher ampere ratings.

Information on all the Littelfuse fuse series referenced above can be found on the UL/CSA Fuse Classes and Applications Charts found later in this Technical Application Guide.

IV. SELECTION CONSIDERATIONS FOR FUSE HOLDERS

Equally important to the selection of the proper fuse is the correct selection of the proper fuse holder or fuse block for a given application. Fuse holders are available using most of the same Selection Considerations outlined above for UL fuse classes. Considerations for fuse holders include:

- Current Rating
- Voltage Rating
- Interrupting Rating
- Physical Size
- Indication

Additional selection considerations for fuse holders and fuse blocks include:

- Number of poles
- Mounting configuration
- Connector type

Number of Poles

The number of poles for each set of fuses is determined by the characteristics of the circuit. Most fuse block series are available in 1, 2, or 3 pole configurations, although some are also available with four or more poles. The option to gang individual fuse blocks into longer strips will be determined by the available space and type of wire being used.

Mounting Configuration

Depending on the fuse block design, another selection consideration to evaluate is how the fuse block is mounted or inserted into the panel. Historically, fuse blocks simply screwed into the back of the panel, but many newer designs have now added (or replaced the screw-in design with) a DIN rail mounting capability. The DIN rail mounting feature allows the blocks to be quickly installed and removed from the rails.

Connector Type

For Littelfuse fuse blocks, a choice of three connector types or wire terminations is available:

- Screw – for use with spade lugs or ring terminals.
- Screw with Pressure Plate – for use with solid or stranded wire without terminal and recommended for applications where vibration will be a factor.
- Box Lug – the most durable of the three options and used with all types of solid wire and Class B and Class C stranded wire.

There are a few additional aspects to keep in mind when selecting the fuse holder or fuse block needed for a given application. UL Class H blocks accept Class H, Class K5, and Class R fuses. Similarly, Midget-style fuse blocks accept both Midget and UL Class CC fuses.

Both UL Class R and Class CC fuse holders contain a rejection feature which prevents the insertion of a different Class or type of fuse. The physical size and dimensions of UL Class J and Class T fuses accomplish the same thing in preventing the insertion of a different Class of fuse as well.

V. CIRCUIT PROTECTION CHECKLIST

To select the proper overcurrent protective device for an electrical system, circuit and system designers should ask themselves the following questions before a system is designed:

- What is the normal or average current expected?
- What is the maximum continuous (three hours or more) current expected?
- What inrush or temporary surge currents can be expected?
- Are the overcurrent protective devices able to distinguish between expected inrush and surge currents, and open under sustained overloads and fault conditions?
- What kind of environmental extremes are possible? Dust, humidity, temperature extremes and other factors need to be considered.
- What is the maximum available fault current the protective device may have to interrupt?
- Is the overcurrent protective device rated for the system voltage?
- Will the overcurrent protective device provide the safest and most reliable protection for the specific equipment?
- Under short-circuit conditions, will the overcurrent protective device minimize the possibility of a fire or explosion?
- Does the overcurrent protective device meet all the applicable safety standards and installation requirements?

Answers to these questions and other criteria will help to determine the type overcurrent protection device to use for optimum safety, reliability and performance.

© 2023 Littelfuse, Inc.

FUSE CHARACTERISTIC CURVES AND CHARTS

The performance capabilities of various fuses are graphically represented by two different types of fuse characteristic curves: time-current curves and peak let-through charts. These curves and charts define the operating characteristics of a given fuse, and assist system designers and engineers in selecting the proper fuse to protect equipment and electrical systems.

Understanding Time-current Curves

Time-current curves provide a graphical representation or plot of a fuse's average melting (opening) time at any current. Time-current curves for Littelfuse POWR-GARD® fuses can be found online at **littelfuse.com/technicalcenter**.

In order to make the curves more readable, the performance information is presented on log-log paper. The overcurrent values appear across the bottom and increase in magnitude from left to right. Average melting times appear on the left-hand side of the curve and increase in magnitude from bottom to top. The ampere ratings of the individual fuses for a given series are listed at the top and increase in rating from left to right. *Figure 4* shows the average melting time curves for a typical time-delay fuse series.

As discussed earlier in the Fuseology Fundamentals section, time-delay, fast-acting, and very fast-acting fuses all respond differently based on the overcurrents occurring in the systems each is protecting. To illustrate the basic differences between each type of fuse, *Figure 5* compares the average melting times for 100 and 600 amp ratings

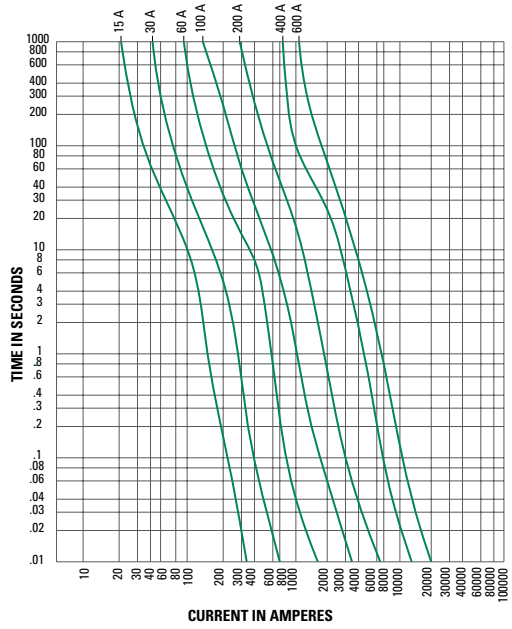

Figure 4 – Average Melting Time Curves for Typical Time-Delay Fuse Series

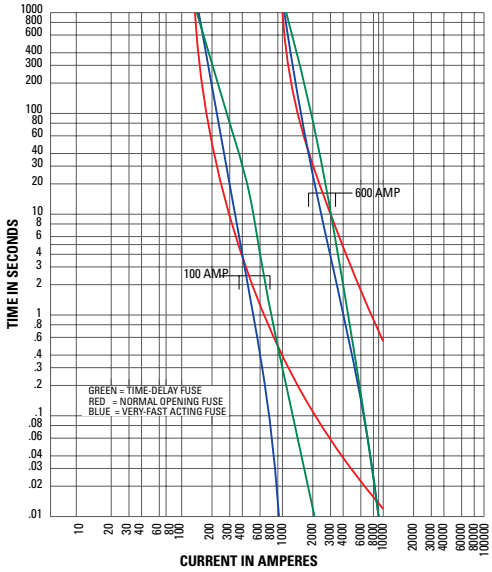

Figure 5 – Comparison of Average Melting Times for Three Fuse Types

of three fuse types: Littelfuse dual-element, time-delay LLSRK series class RK1 fuses (green); Littelfuse normal opening NLS series class K5 fuses (red); and Littelfuse very fast acting L60S series semiconductor fuses (blue).

To better illustrate this point, *Table 3* also compares the opening times for each of these fuses.

AMPERE RATING	FUSE TYPE	OPENING TIME IN SECONDS		
		500% RATING	800% RATING	1200% RATING
100	TIME-DELAY	12 secs.	0.9 secs.	0.14 secs.
	NORMAL OPENING	2 secs.	0.7 secs.	0.3 secs.
	VERY FAST-ACTING	1.3 secs.	0.02 secs.	>0.01 secs.
600	TIME-DELAY	14 secs.	0.7 secs.	0.045 secs.
	NORMAL OPENING	10 secs.	3 secs.	1.1 secs.
	VERY FAST-ACTING	2 secs.	0.05 secs.	>0.01 secs.

Table 3 – Comparative Opening Times for Time-Delay, Fast-Acting, and Very Fast-Acting Fuses

Peak Let-through Charts

Peak let-through charts illustrate the maximum instantaneous current through the fuse during the total clearing time. This represents the current limiting ability of a fuse.

Fuses that are current-limiting open severe short-circuits within the first half-cycle (180 electrical degrees or 0.00833 seconds) after the fault occurs. Current-limiting fuses also reduce the peak current of the available fault current to a value less than would occur without the fuse. This reduction is shown in *Figure 6*.

A fuse's current-limiting effects are shown graphically on Peak Let-through charts such as the one shown in *Figure 7*. The values across the chart's bottom represent the available

FUSE CHARACTERISTIC CURVES AND CHARTS

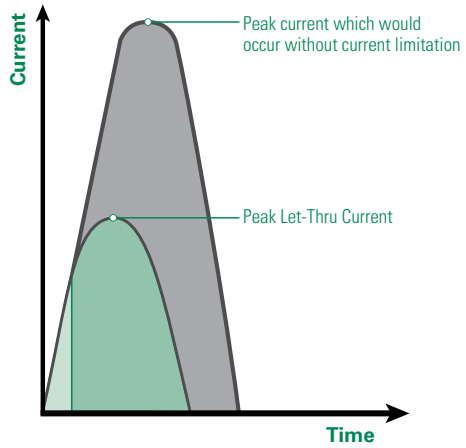

Figure 6 – Current limiting effect of fuses

(also referred to as potential or prospective) rms symmetrical fault current. The values on the chart's left side represent the instantaneous available peak current and the peak let-through current for various fuse ratings.

To better explain the function of these charts, let's run through an example. Start by entering the chart on the bottom at 100,000 rms symmetrical amperes and read upwards to the A-B line. From this point, read horizontally to the left and read the instantaneous peak let-thru current of 230,000 amperes. In a circuit with a typical 15% short-circuit power factor, the instantaneous peak of the available current is approximately 2.3 times the rms symmetrical value. This occurs since the A-B line on the chart has a 2.3:1 slope.

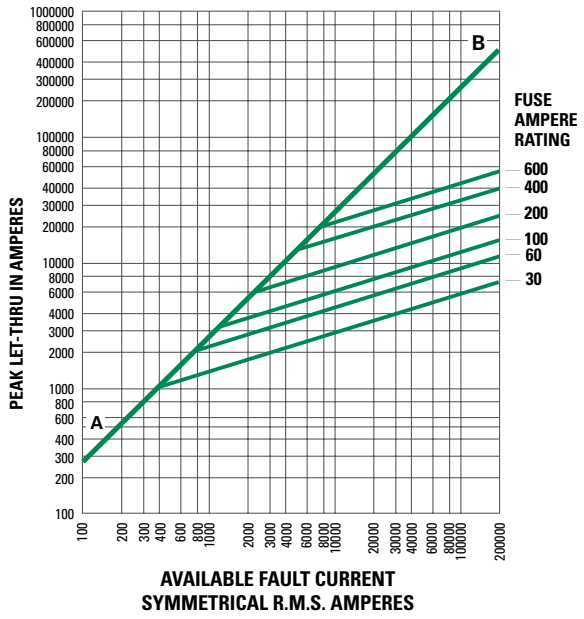

Figure 7 – Peak Let-through Charts

The diagonal curves that branch off the A-B line illustrate the current-limiting effects of different fuse ampere ratings for a given fuse series. To continue the example from above, enter the chart in *Figure 7* on the bottom at 100,000 rms symmetrical amperes and read upwards to the intersection of the 200 ampere fuse curve. Now read from this point horizontally to the left and read a peak let-through current of approximately 20,000 amperes.

What this tells us is that the 200 ampere fuse has reduced the peak current during the fault from 230,000 amperes to 20,000 amperes. In other words, this is the current-limiting effect of the 200 ampere fuse. 20,000 amperes is less than one-tenth of the available current. This is important because the magnetic force created by current flow is a function of the peak current squared. If the peak let-through current of a current-limiting fuse is one-tenth of the available peak, the magnetic force is reduced to less than 1/100 of what would occur without the fuse.

Using the Peak Let-through Charts ("Up-Over-and-Down")

Peak Let-through Charts for Littelfuse POWR-GARD® fuses can be found online at **littelfuse.com/technicalcenter**. These charts are useful in determining whether a given fuse can properly protect a specific piece of equipment.

For example, given an available fault-current of 100,000 rms symmetrical amperes, determine whether 600 amp 250 volt time-delay Class RK1 fuses can sufficiently protect equipment that has a 22,000 amp short-circuit rating. Refer to *Figure 8*.

Start by locating the 100,000 A available fault-current on the bottom of the chart (Point A) and follow this value upwards to the intersection with the 600 amp fuse curve (Point B). Next, follow this point horizontally to the left to intersect with the A-B line (Point C). Finally, read down to the bottom of the chart (Point D) to read a value of approximately 18,000 amps.

Can the fuse selected properly protect the equipment for this application? Yes, the POWR-PRO® LLNRK 600 ampere RK1 current-limiting fuses have reduced the 100,000 amperes available current to an apparent or equivalent 18,000 amps. When protected by 600 amp LLNRK RK1 fuses, equipment with short-circuit ratings of 22,000 amps may be safely connected to a system having 100,000 available rms symmetrical amperes.

This method, sometimes referred to as the "Up-Over-and-Down" method, may be used to:

1. Provide back-up short-circuit protection to large air power circuit breakers.
2. Enable non-interrupting equipment such as bus duct to be

© 2023 Littelfuse, Inc.

SELECTIVE COORDINATION

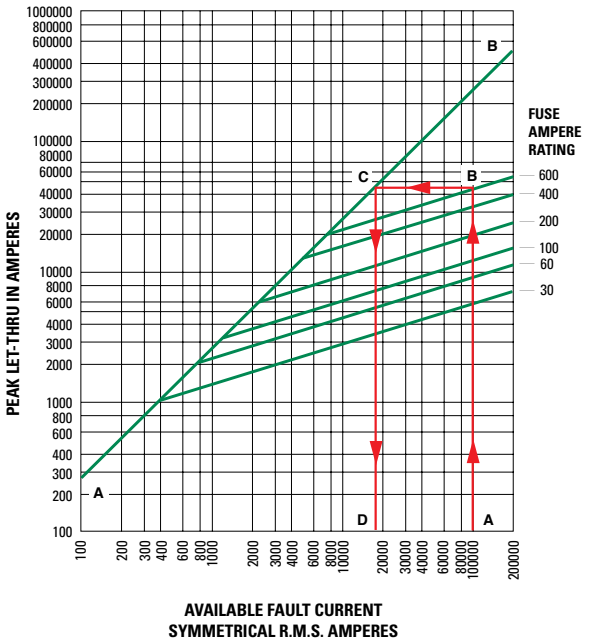

Figure 8 – Peak Let-through Chart for POWR-PRO® LLNRK Class RK1 Dual-Element Fuses Using the Up-Over-and-Down Method

installed in systems with available short-circuit currents greater than their short circuit (withstand) ratings.

However, this method may not be used to select fuses for backup protection of molded case or intermediate frame circuit breakers. National Electrical Code® (NEC®) Article 240.86 requires Series Ratings. Refer to the NEC® for more information.

UL Listed fuse-to-circuit breaker series ratings are now available from most national load center and panelboard manufacturers. Listings are shown in their product digests, catalogs, and online. Many local builders have also obtained fuse-to-circuit breaker series ratings. For additional information contact the Littelfuse Technical Support Group at 1-800-TEC-FUSE (1-800-832-3873).

Short-Circuit Current Rating (SCCR)

Since 2005, the NEC® has required Industrial Control Panels to be labeled with their SCCR. These labels allow users and inspectors to compare the SCCR of the equipment to the available fault current in order to avoid potential hazards in facilities.

Selective Coordination

A "coordinated" or "selective" system is a system whose overcurrent protective devices have been carefully chosen and their time-current characteristics coordinated.

Only the overcurrent device immediately on the line side of an overcurrent will open for any overload or short-circuit condition.

To further clarify, refer to the Terms and Definitions section for the definition of Selective Coordination and *Figure 15* for a graphical example.

Since the advent of electrical and electronic equipment, businesses have become entirely dependent on the continuous availability of electric energy. Loss of power halts all production and order processing, yet expenses continue to increase. Even many UPS systems become unintentionally non-selective causing power loss to computers and other critical equipment. Non-selectivity may defeat otherwise well-engineered UPS systems.

In a selective system, none of this occurs. Overloads and faults are disconnected by the overcurrent protective device immediately on the line side of the problem. The amount of equipment removed from service is minimized, the faulted or overloaded circuit is easier to locate, and a minimum amount of time is required to restore full service.

For these and many other reasons, selectivity is the standard by which many systems are judged and designed.

Fuse Selectivity

To get a better sense of how to ensure that fuses are selectively coordinated within an electrical system, refer to *Figure 4* shown earlier in this Technical Application Guide. This figure shows typical average melting time-current curves for one class of fuses. Note that the curves are roughly parallel to each other and that for a given overcurrent, the smaller fuse ratings respond quicker than the larger ratings. The heat energy required to open a fuse is separated into melting I^2t and arcing I^2t (see definition of Ampere-Squared-Seconds). The sum of these is the total clearing I^2t.

For a system to be considered coordinated, the smaller fuse total clearing I^2t must be less than the larger fuse melting I^2t. In other words, if the downstream (branch) fuse opens the circuit before the overcurrent affects the upstream (feeder) fuse element, the system will be considered selective. This can be determined by analyzing curves displaying melting and total clearing I^2t, or from minimum melting and maximum clearing time-current curves.

But the simplest method of coordinating low voltage power fuses is by using a Fuse Coordination Table such as the one shown in *Table 4*. This table is only applicable for the Littelfuse POWR-PRO® and POWR-GARD® fuse series listed. Tables such as this greatly reduce design time. For example, the coordination table shows that POWR-PRO KLPC Class L fuses coordinate at a two-to-one ratio with other Class L fuses, with POWR-PRO LLNRK / LLSRK / LLSRK_ID series

© 2023 Littelfuse, Inc.

Class RK1 fuses, and POWR-PRO JTD / JTD_ID series Class J fuses.

In the system shown in *Figure 9*, the 3000 amp Class L main fuses are at least twice the ratings of the 1500, 1200, and 1000 amp Class L feeder fuses. Using the 2:1 ratio just referenced above, it is determined that these fuses will coordinate. The Coordination Table also shows that the LLSRK_ID series time-delay RK1 feeder and branch circuit fuses coordinate at a two-to-one ratio with the Class L feeder fuses, so the entire system in *Figure 9* would be considered 100% coordinated.

Circuit Breaker Coordination

As a result of the numerous types of circuit breakers and circuit breaker trip units available in today's market, developing a coordinated circuit breaker system or coordinating circuit breakers with fuses is beyond the scope of this Technical Application Guide. For further questions, contact the Littelfuse Technical Support Group.

NEC® Requirements for Selective Coordination

Component Short-Circuit Protecting Ability

As shown in *Figure 10*, the NEC® requires equipment protection to be coordinated with overcurrent protective devices and the available fault current in order to prevent extensive damage to the equipment. Essentially, this means that electrical equipment must be capable of withstanding heavy overcurrents without damage or be properly protected by overcurrent protective devices that will limit damage.

When a severe fault occurs in an unprotected circuit, current immediately increases to a very high value. This is the available or prospective fault current. Some fuses respond so quickly to the increasing current that they interrupt current within the first half-cycle - or before the current even reaches its first peak. This is illustrated in *Figure 6* found earlier in the Technical Application Guide. Such fuses are termed "current-limiting fuses."

Current-limiting fuses stop damaging current faster than any other protective device, and greatly reduce or totally prevent component damage from high fault currents. This performance capability helps users meet the NEC® Article 110.10 requirements listed in *Figure 10*.

Pre-Engineered Solutions

Applicable code requirements also continue to expand with each new edition of the National Electrical Code®. As of the 2014 edition of the NEC®, the following requirements need to be met – and can be, utilizing Littelfuse POWR-GARD® Pre-Engineered Solutions:

- NEC 517.26 – Healthcare Essential Electrical Systems
- NEC 620.82 – Elevators
- NEC 700.32 – Emergency Systems
- NEC 701.27 – Legally Required Standby Systems
- NEC 708.54 – Critical Operations Power Systems

LINE-SIDE FUSES			LOAD-SIDE FUSES									
			TIME-DELAY FUSES AMPERE RANGE, UL CLASS AND CATALOG NO.						FAST-ACTING FUSES AMPERE RANGE, UL CLASS AND CATALOG NO.			
AMPERE RANGE	UL CLASS	LITTELFUSE CATALOG NUMBER	601-6000	601-4000	30-600	30-600	30-600	0-30	30-600	30-1200	30-600	1-60
			L	L	RK1	J	RK5	CC	RK1	T	J	G
			KLPC LDC	KLLU	LLNRK LLSRK_ID	JTD_ID JTD	FLNR_ID FLSR_ID IDSR	CCMR	KLNR KLSR	JLLN JLLS	JLS	SLC
601-6000	L	KLPC	2:1	2:1	2:1	2:1	4:1	2:1	2:1	2:1	2:1	N/A
601-4000	L	KLLU	2:1	2:1	2:1	2:1	4:1	2:1	2:1	2:1	2:1	N/A
601-2000	L	LDC	2:1	2:1	2:1	2:1	4:1	2:1	2:1	2:1	2:1	N/A
30-600	RK1	LLNRK	N/A	N/A	2:1	2:1	8:1	2:1	3:1	3:1	3:1	4:1
30-600	RK1	LLSRK_ID	N/A	N/A	2:1	2:1	8:1	2:1	3:1	3:1	3:1	4:1
30-600	J	JTD_ID	N/A	N/A	2:1	2:1	8:1	2:1	3:1	3:1	3:1	4:1
30-600	RK5	IDSR	N/A	N/A	1.5:1	1.5:1	2:1	2:1	1.5:1	1.5:1	1.5:1	1.5:1
30-600	RK5	FLNR_ID	N/A	N/A	1.5:1	1.5:1	2:1	2:1	1.5:1	1.5:1	1.5:1	1.5:1
30-600	RK5	FLSR_ID	N/A	N/A	1.5:1	1.5:1	2:1	2:1	1.5:1	1.5:1	1.5:1	1.5:1
30-600	RK1	KLNR	N/A	N/A	3:1	3:1	8:1	N/A	3:1	3:1	3:1	4:1
30-600	RK1	KLSR	N/A	N/A	3:1	3:1	8:1	N/A	3:1	3:1	3:1	4:1
30-1200	T	JLLN	N/A	N/A	3:1	3:1	8:1	N/A	3:1	3:1	3:1	4:1
30-1200	T	JLLS	N/A	N/A	3:1	3:1	8:1	N/A	3:1	3:1	3:1	4:1
30-600	J	JLS	N/A	N/A	3:1	3:1	8:1	N/A	3:1	3:1	3:1	4:1
1-60	G	SLC	N/A	N/A	3:1	3:1	4:1	N/A	2:1	2:1	2:1	2:1

Table 4 – Fuse Coordination Table. Selecting the Correct Fuse Ampere Ratio to Maintain Selectively Coordinated Systems. (Ratios are expressed as Line-Side Fuse to Load-Side Fuse.)

© 2023 Littelfuse, Inc.

SELECTIVE COORDINATION

The Littelfuse product line of Pre-Engineered Solutions includes:

- LPS Series POWR-Switch (single elevator shunt-trip disconnect switch)
- LCP Selective Coordination Panel

These products continue to gain in popularity because they meet NEC® requirements and offer simple, economical solutions for a variety of applications.

Visit **littelfuse.com/lcp** for more information on Littelfuse Pre-Engineered Solution products and corresponding selective coordination requirements.

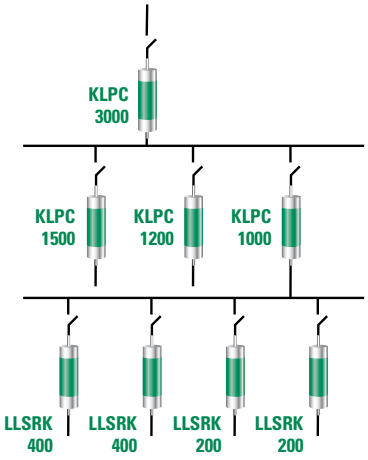

Figure 9 – Example of Selectively Coordinated Fused System

NATIONAL ELECTRICAL CODE®

ARTICLE 110 – Requirements for Electrical Installations

I. General

110.3. Examination, Identification, Installation, and Use of Equipment.

(A) Examination. In judging equipment, considerations such as the following shall be evaluated:

(5) Heating effects under normal conditions of use and also under abnormal conditions likely to arise in service.

(6) Arcing effects.

(B) Installation and Use. Listed or labeled equipment shall be used or installed in accordance with any instructions included in the listing or labeling.

110.9 Interrupting Rating. Equipment intended to interrupt current at fault levels shall have an interrupting rating at nominal circuit voltage sufficient for the current that is available at the line terminals of the equipment.
Equipment intended to interrupt current at other than fault levels shall have an interrupting rating at nominal circuit voltage sufficient for the current that must be interrupted.

110.10 Circuit Impedance, Short-Circuit Current Ratings, and Other Characteristics. The overcurrent protective devices, the total impedance, the equipment short-circuit current ratings, and other characteristics of the circuit to be protected shall be selected and coordinated to permit the circuit protective devices used to clear a fault to do so without extensive damage to the electrical equipment of the circuit. This fault shall be assumed to be either between two or more of the circuit conductors or between any circuit conductor and the equipment grounding conductor(s) permitted in 250.118. Listed equipment applied in accordance with their listing shall be considered to meet the requirements of this section.

ARTICLE 240 – Overcurrent Protection

240.1 Scope. Parts I through VII of this article provide the general requirements for overcurrent protection and overcurrent protective devices not more than 1000 volts, nominal. Part VIII covers overcurrent protection for those portions of supervised industrial installations operating at voltages of not more than 1000 volts, nominal. Part IX covers overcurrent protection over 1000 volts, nominal.

Informational Note: Overcurrent protection for conductors and equipment is provided to open the circuit if the current reaches a value that will cause an excessive or dangerous temperature in conductors or conductor insulation. See also Articles 110.9 for requirements for interrupting ratings and 110.10 for requirements for protection against fault currents.

(Reproduced by permission of NFPA per 2014 Edition of NEC)

Figure 10 – National Electrical Code Requires Effective Overcurrent Protection

© 2023 Littelfuse, Inc.

UL/CSA FUSE CLASSES AND APPLICATIONS

Overcurrent and short-circuit protection of power and lighting feeders and branch circuits

Current Limiting

Fuses which meet the requirements for current limiting fuses are required to be labeled "Current Limiting". Fuse labels must include: UL/CSA fuse class, manufacturer's name or trademark, current rating, AC and/or DC voltage rating, and AC and/or DC interrupting rating. "Time Delay", "D", "TD" or equivalent may also be included on the label when the fuse complies with the time delay requirements of its class.

CLASS L

STANDARDS: UL Standard 248-10,
CSA Standard C22.2, No. 106, classified as HRCI-L
VOLTAGE RATING: 600 volts, AC and/or DC
CURRENT RATINGS: 601-6000 amps
KLPC also available 200-600A; LDC also available 150-600A
INTERRUPTING RATING: AC: 200,000 amps rms symmetrical
DC: 50,000, 100,000, or 200,000 amps
Not interchangeable with any other UL fuse class.
Time delay: Class L fuses may be marked "Time-Delay" although UL does not investigate time-delay characteristics of Class L fuses.
KLPC & KLLU: 10 seconds at 500% current rating
LDC: 4 seconds at 500% current rating

LF SERIES: KLPC, KLLU, LDC

PAGE: 8

CLASS R

STANDARDS: UL Standard 248-12,
CSA Standard C22.2, No. 106, classified as HRCI-R
VOLTAGE RATINGS: 250 and 600 volts, AC; 125 and 300 volts DC
CURRENT RATINGS: 0-600 amps
INTERRUPTING RATING: 200,000 amps rms symmetrical
TWO CLASSES: RK1 and RK5
Time delay is optional for Class R fuses.
Time Delay fuses are required to hold 500% current rating for a minimum of ten seconds.
Same dimensions as UL Class H fuses, terminals modified to provide rejection feature.
Fits UL Class R fuse holders which reject non Class R fuses.
Physically interchangeable with UL Class H, NEMA Class H, and UL Classes K1 & K5 when equipment has Class H fuse holders.

CLASS RK1

High degree of current limitation. Provides IEC Type 2 (no damage) protection for motor starters and control components. Time Delay optional, LLSRK_ID Series provides visual indication of blown fuse.

LF SERIES: Time Delay: LLNRK, LLSRK, LLSRK_ID
Fast Acting: KLNR, KLSR

PAGE: 13

CLASS RK5

Moderate degree of current limitation, adequate for most applications. Time delay optional. FLNR_ID, FLSR_ID and IDSR series provides visual indication of blown fuse.

LF SERIES: FLNR, FLNR_ID, FLSR, FLSR_ID, and IDSR

PAGE: 16

CLASS J

STANDARDS: UL Standard 248-8,
CSA Standard C22.2, No. 106, classified as HRCI-J
VOLTAGE RATING: 600 volts, AC
CURRENT RATINGS: 0-600 amps
INTERRUPTING RATING: 200,000 amps rms symmetrical
Not interchangeable with any other UL fuse class.
Time delay optional: Minimum of 10 seconds at 500% current rating.

LF SERIES: Time Delay: JTD_ID, JTD
Fast Acting: JLS

PAGE: 21

CLASS CC/CD

STANDARDS: UL Standard 248-4,
CSA Standard C22.2, No. 106, classified as HRCI Misc.
VOLTAGE RATING: 600 volts, AC
CURRENT RATINGS: UL Class CC: 0-30 amps
UL Class CD: 35-60 amps
INTERRUPTING RATINGS: 200,000 amps rms symmetrical
Time delay optional: Minimum of 12 seconds at 200% current rating.

LF SERIES: Time Delay: CCMR (motors), KLDR (transformers)
Fast Acting: KLKR

PAGE: 27

CLASS T

STANDARDS: UL Standard 248-15
CSA Standard C22.2, No. 106, classified as HRCI-T
VOLTAGE RATINGS: 300 and 600 volts AC, 125 and 300 volts DC
CURRENT RATINGS: 0-1200 amps
900 to 1200 amps UL Recognized for 600V version
INTERRUPTING RATING: 200,000 amps rms symmetrical
Fast-Acting fuses. High degree of current limitation.
Very small fuses; space-saving and non-interchangeable with any other UL fuse class.

LF SERIES: JLLN, JLLS

PAGE: 24

CLASS G

STANDARDS: UL Standard 248-5
CSA Standard C22.2, No. 106, classified as HRCI Misc.
VOLTAGE RATING: 480 volts, AC
CURRENT RATINGS: 0-60 amps
INTERRUPTING RATING: 100,000 amps rms symmetrical
Not interchangeable with any other UL fuse class.
Time delay optional: Minimum of 12 seconds at 200% current rating.

LF SERIES: SLC

PAGE: 26

CLASS K

STANDARDS: UL Standard 248-9; No CSA Standard
VOLTAGE RATINGS: 250 and 600 volts, AC
CURRENT RATING: 0-600 amps
INTERRUPTING RATINGS: Three permitted: 50,000, 100,000, and 200,000 amps rms symmetrical
Time delay is optional for Class K fuses.
Time Delay fuses are required to hold 500% current rating for a minimum of ten seconds.
Same Dimensions and Physically interchangeable with UL Class H fuse holders.
Class K fuses are not permitted to be labeled Current Limiting because there is no rejection feature as required by NEC® Article 240-60(B).

CLASS K1

Same prescribed degree of current limitation as RK1 fuses when tested at 50,000 or 100,000 amps rms symmetrical.

LF SERIES: Time Delay: LLNRK, LLSRK
Fast Acting: KLNR, KLSR

PAGE: 13

CLASS K5

Same prescribed degree of current limitation as RK5 fuses when tested at 50,000 or 100,000 amps rms symmetrical.

LF SERIES: NLN, NLS

PAGE: 20

© 2023 Littelfuse, Inc.

UL/CSA FUSE CLASSES AND APPLICATIONS

Overcurrent and short-circuit protection of power and lighting feeders and branch circuits

FUSES FOR SUPPLEMENTARY OVERCURRENT PROTECTION

STANDARDS: UL Standard 248-14; CSA Standard C22.2, No. 59-1. Three Classifications covered:
NOTE: Fuses may be rated for AC and/or DC when suitable for such use.

(1) **MICRO FUSES**
Voltage ratings: UL, 125 volts; CSA, 0-250 volts
Current ratings: UL, 0-10 amps; CSA, 0-60 amps
Interrupting rating: 50 amps rms symmetrical

(2) **MINIATURE FUSES** (CSA classifies these as Supplemental Fuses)
Voltage ratings: UL, 125 or 250 volts; CSA, 0-600 volts
Current ratings: UL, 0-30 amps; CSA, 0-60 amps
Interrupting rating: 10,000 amps rms symmetrical

(3) **MISCELLANEOUS CARTRIDGE FUSES** (CSA classifies these as Supplemental Fuses)
Voltage ratings: UL, 125-1000 volts; CSA, 0-100 volts
Current ratings: UL, 0-30 amps; CSA 0-60 amps
Interrupting ratings: 10,000, 50,000, or 100,000 amps rms symmetrical

Time delay (Optional); Minimum delay at 200% fuse rating:
5 seconds for fuses rated 3 amps or less
12 seconds for fuses rated more than 3 amps

LF SERIES: BLF, BLN, BLS, FLA, FLM, FLQ, FLU, KLK, KLQ KLKD, SPF
NOTE: Littelfuse electronic fuses are also covered by these standards; see electronic section of this catalog, or littelfuse.com for complete listing.

PAGE: 30

SPECIAL PURPOSE FUSES

There are no UL Standards covering this category of fuses. These fuses have special characteristics designed to protect special types of electrical or electronic equipment such as diodes, SCR, transistors, thyristors, capacitors, integrally fused circuit breakers, parallel cable runs, etc.
Fuses may be UL Recognized for use as a component in UL Listed equipment. UL Recognized fuses are tested for characteristics such as published interrupting capacity. They are also covered by UL re-examination service.
Non-renewable
VOLTAGE RATINGS: up to 1000 volts AC and/or DC
AMPERE RATINGS: up to 6000 amperes
INTERRUPTING RATINGS: up to 200,000 amperes
Many of these fuses are extremely current limiting. When considering application of these fuses, or if you have special requirements, contact Littelfuse Technical Support Group for assistance.

LF SERIES: KLC, L15S, L25S, L50QS, L50S, L60S, L70QS, L70S, JLLS 900 amp through 1200 amp

PAGES: 70

Non-Current Limiting

CLASS H

STANDARDS: UL Standard 248-6
CSA Standard C22.2, No. 59.1
Also known as NEMA Class H, and sometimes referred to as "NEC" or "Code" fuses
VOLTAGE RATINGS: 250 and 600 volts, AC
AMPERE RATINGS: 0-600 amps
INTERRUPTING RATINGS: 10,000 amps rms symmetrical
Two types: one-time and renewable
Physically interchangeable with UL Classes K1 & K5;
Fits UL Class H fuse holders which will also accept K1, K5, RK5, and RK1 fuses.
Manufacturers are upgrading Class H One-time fuses to Class K5 per UL Standard 248-9D, See Class K fuses.

ONE-TIME FUSES (NON-RENEWABLE)

Time delay: Optional
Time-delay fuses must hold 500% current rating for a minimum of ten seconds.

LF SERIES: NLKP

PAGE: 20

RENEWABLE FUSES

Only Class H fuses may be renewable. While time delay is optional, no renewable fuses meet requirements for time delay.
Some renewable fuses have a moderate amount of time delay, referred to as "time lag" to differentiate from true time delay.

LF SERIES: Discontinued - Please cross to RK5 or RK1 class fuses

PLUG FUSES

STANDARDS: UL Standard 248-11,
CSA Standard C22.2, No. 59.1
VOLTAGE RATINGS: 125 volts AC only
AMPERE RATINGS: 0-30 amps
INTERRUPTING RATINGS: 10,000 amps rms symmetrical. Interrupting rating need not be marked on fuse.
Two types: Edison-base and Type S
EDISON-BASE: Base is same as standard light bulb. All amp ratings interchange able. NEC® permits Edison-base plug fuses to be used only as replacements for existing fuses, and only when there is no evidence of tampering or overfusing.
TYPE S: Not interchangeable with Edison-base fuses unless non-removable Type S fuse adapter is installed in Edison-base fuse socket. To prevent overfusing, adapters have three ampere ratings: 10-15, 16-20, and 21-30 amps.
Time delay: Fuses may be time delay, if so, they are required to hold 200% of rating for 12 seconds minimum.
NOTE: Plug fuses may be used where there is not more than 125 volts between conductors or more than 150 volts from any conductor to ground. This permits their use in 120/240 volts grounded, single-phase circuits.

LF SERIES: Edison-base: TOO, TLO
Type S: SOO, SLO
Type S Adapters: SAO

PAGE: 65



Additional Resources and POWR-GARD® Products

Littelfuse is continually developing new technical resources and products that meeting evolving industry standards. For the latest information, visit:
littelfuse.com

© 2023 Littelfuse, Inc.

TERMS AND DEFINITIONS

Adjustable Alarm Level – A setting on a protection relay at which an LED or an output contact operates to activate a visual or audible alarm.

Adjustable Time Delay – A setting on a protection relay that determines the time between the fault detection and relay operation.

AIC or A.I.C. – See Interrupting Capacity.

AIR or A.I.R. – See Interrupting Rating.

Alarm Relay Contact – The output of the relay that acts as a switch and is connected to a visual or audible alarm.

Ambient Temperature – The air temperature surrounding a device. For fuses or circuit breakers in an enclosure, the air temperature within the enclosure.

Ampacity – The current in amperes that a conductor can carry continuously under the conditions of use without exceeding its temperature rating. It is sometimes informally applied to switches or other devices which are more properly referred to by their ampere rating.

Ampere Rating – The current rating, in amperes, that is marked on fuses, circuit breakers, or other equipment.

Ampere-Squared-Seconds (I^2t) – A means of describing the thermal energy generated by current flow. When a fuse is interrupting a current within its current-limiting range, the term is usually expressed as melting, arcing, or total clearing I^2t.

- Melting I^2t is the heat energy passed by a fuse after an overcurrent occurs and until the fuse link melts. It equals the rms current squared multiplied by the melting time in seconds. For times less than 0.004 seconds, melting I^2t approaches a constant value for a given fuse.
- Arcing I^2t is the heat energy passed by a fuse during its arcing time. It is equal to the rms arcing current squared (see definition below), multiplied by arcing time.
- Clearing I^2t (also Total Clearing I^2t) is the ampere-squared seconds (I^2t) through an overcurrent device from the inception of the overcurrent until the current is completely interrupted. Clearing I^2t is the sum of the Melting I^2t plus the Arcing I^2t.

Analog Output – A 0–1 mA, 4–20 mA or 0–5 Vdc signal from a protection relay used to pass information to a device or controller.

Arc-Blast – A pressure wave created by the heating, melting, vaporization, and expansion of conducting material and surrounding gases or air.

Arc-Flash – The sudden release of heat energy and intense light at the point of an arc. Can be considered a short-circuit through the air, usually created by accidental contact between live conductors.

Arc Gap – The distance between energized conductors or between energized conductors and ground. Shorter arc gaps result in less energy being expended in the arc, while longer gaps reduce arc current. For 600 volts and below, arc gaps of 1.25 inches (32 mm) typically produce the maximum incident energy.

Arc Rating – A rating assigned to material(s) that relates to the maximum incident energy the material can resist before break open of the material or onset of a second-degree burn. The arc rating is typically shown in cal/cm².

Arcing Current (See *Figure 11*) – The current that flows through the fuse after the fuse link has melted and until the circuit is interrupted.

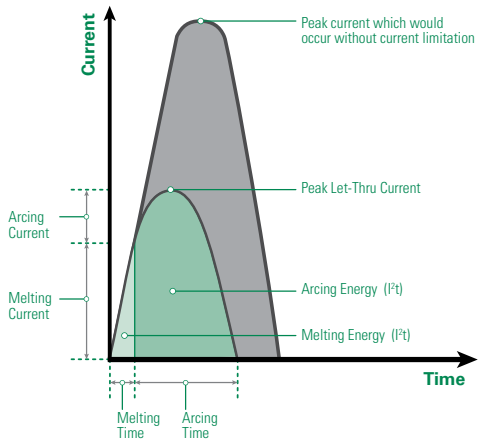

Figure 11 – Arcing and melting currents plus arcing, melting and clearing times

Arcing I^2t – See Ampere-Squared-Seconds (I^2t).

Arcing Fault – A short-circuit that arcs at the point of fault. The arc impedance (resistance) tends to reduce the short-circuit current. Arcing faults may turn into bolted faults by welding of the faulted components. Arcing faults may be phase-to-phase or phase-to-ground.

Arcing Time (See *Figure 11*) – The time between the melting of a fuse link or parting of circuit breaker contacts, until the overcurrent is interrupted.

Arc Voltage (See *Figure 12*) – Arc voltage is a transient voltage that occurs across an overcurrent protection device during the arcing time. It is usually expressed as peak instantaneous voltage (V_{peak} or E_{peak}), or on rare occasion as rms voltage.

Asymmetrical Current – See Symmetrical Current.

Available Short-Circuit Current (also Available or Prospective Fault Current) – The maximum rms Symmetrical Current that would flow at a given point in a system under bolted-fault conditions. Short-circuit current is maximum during the first half-cycle after the fault occurs. See definitions of Bolted Fault and Symmetrical Current.

© 2023 Littelfuse, Inc.

TERMS AND DEFINITIONS

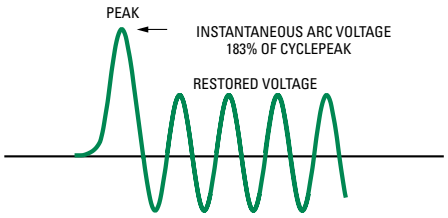

Figure 12 – Transient overvoltage during arcing time

Blade Fuse – See Knife Blade Fuse.

Body – The part of a fuse enclosing the fuse elements and supporting the contacts. Body is also referred to as cartridge, tube, or case.

Bolted Fault – A short-circuit that has no electrical resistance at the point of the fault. It results from a firm mechanical connection between two conductors, or a conductor and ground. Bolted faults are characterized by a lack of arcing. Examples of bolted faults are a heavy wrench lying across two bare bus bars, or a crossed-phase condition due to incorrect wiring

Boundaries of Approach – Protection boundaries established to protect personnel from shock and Arc-Flash hazards.

Calorie – The amount of heat needed to raise the temperature of one gram of water by one degree Celsius.1 cal/cm² is equivalent to the exposure on the tip of a finger by a cigarette lighter for one second.

Cartridge Fuse – A fuse that contains a current-responsive element inside a tubular fuse body with cylindrical ferrules (end caps).

Case Size (also Cartridge Size) – The maximum allowable ampere rating of a cartridge fuse having defined dimensions and shape. For example, case sizes for UL Listed Class H, K, J, RK1, and RK5 are 30, 60, 100, 200, 400, and 600 amperes. The physical dimensions vary with fuse class, voltage, and ampere rating. UL Standards establish the dimensions for each UL Fuse Class. This catalog's product section contains case size dimensions for all Littelfuse POWR-GARD® fuses.

Clearing I^2t – See Ampere-Square-Seconds (I^2t).

Clearing Time (see *Figure 11*) – The time between the initiation of an overcurrent condition to the point at which the overcurrent is interrupted. Clearing Time is the sum of Melting Time and Arcing Time.

Conformal Coating – Coating used to protect circuit boards from pollutants, corrosion, and mildew.

Contacts (Fuse) – The external metal parts of the fuse used to complete the circuit. These consist of ferrules, caps, blades or terminals, as shown in this catalog.

Coordination or Coordinated System – See Selective Coordination.

Continuous Load – An electrical load where the maximum current is expected to continue for three hours or more.

CT Loop – The electrical circuit between a current transformer and a protection relay or monitoring device.

Current-Based Protection – Protection parameters (trip-levels/ data collection etc.) derived from current levels in a circuit.

Current-limiting Fuse (See *Figure 13*) – A fuse which, when interrupting currents within its current-limiting range, reduces the current in the faulted circuit to a magnitude substantially less than that obtainable in the same circuit if the device was replaced with a solid conductor having comparable impedance. To be labeled "current limiting," a fuse must mate with a fuse block or fuse holder that has either a rejection feature or dimensions that will reject non-current-limiting fuses.

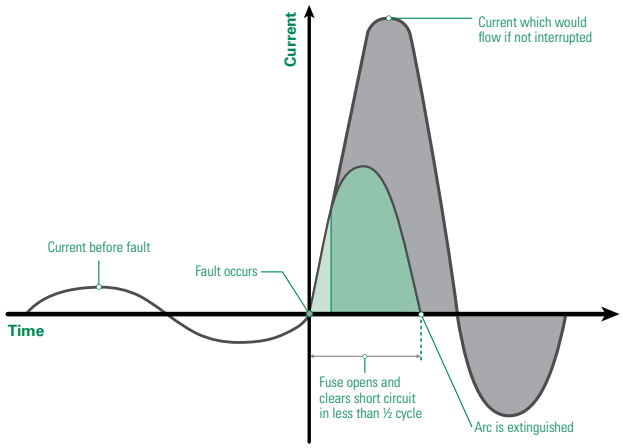

Figure 13 – Current-limiting Fuse

Current-limiting Range - For an individual overcurrent protective device, the current-limiting range begins at the lowest value of rms symmetrical current at which the device becomes current-limiting (the threshold current) and extends to the maximum interrupting capacity of the device. See definitions of Threshold Current and Interrupting Capacity.

Current Rating – See Ampere Rating.

Current Transformer (CT) – A transformer that produces a current in its secondary circuit in a known proportion to current in its primary circuit.

Data Logging – Collecting and storing information in a format that can be reviewed for trending, troubleshooting and reporting.

DFT (Discrete Fourier Transform) Harmonic Filter – An algorithm used to measure the fundamental component of current and voltage and reject harmonics. This allows lower trip settings and eliminates nuisance trips due to harmonics.

© 2023 Littelfuse, Inc.

TERMS AND DEFINITIONS

Distance to Arc – Refers to the distance from the receiving surface to the arc center. The value used for most calculations is typically 18 inches.

Dual-Element Fuse – A fuse with internal construction consisting of a separate time-delay overload element(s) that interrupts overcurrents up to approximately 500%-600% of its nominal rating, plus separate fuse links that quickly open higher value currents. All dual-element fuses have time delay, but, since there are other methods of achieving time delay, not all time-delay fuses have dual-element construction. See Time-Delay Fuse.

EFCT (Earth Fault Current Transformer) – A current transformer engineered to accurately detect low level ground-fault current.

Electrical Hazard Analysis – A study performed to identify the potential electrical hazards to which personnel may be exposed. The analysis should address both shock and Arc-Flash hazards.

Electrically Safe Work Condition – Condition where the equipment and or circuit components have been disconnected from electrical energy sources, locked/tagged out, and tested to verify all sources of power are removed.

Element – A fuse's internal current-carrying components that melt and interrupt the current when subjected to an overcurrent of sufficient duration or value. Also called fuse link.

Fail-Safe Mode (also known as Under Voltage or UV) – Output relay is energized during normal (not tripped) operation. If the protection relay loses supply voltage, the system will trip or alarm.

Fast-Acting Fuse – May also be termed Normal-opening fuse, this is a fuse that has no intentional or built-in time delay. Actual opening time is determined by the fuse class, the overcurrent, and other conditions. Fast-acting is indicated on the fuse label by "Fast-Acting", "F-A", "F", or other suitable marking.

Fault – Same as Short-Circuit and used interchangeably.

Fault Current – The current that flows when a phase conductor is faulted to another phase or ground.

Feeder Protection – Overcurrent or overvoltage devices installed on a feeder circuit to supplement, compliment or replace downstream protective devices.

Filler – A material, such as granular quartz, used to fill a section or sections of a fuse and aid in arc quenching.

Filter – An algorithm used to measure the fundamental component of current and voltage and reject harmonics. This allows lower trip settings and eliminates nuisance trips due to harmonics.

Flash Hazard Analysis – A study that analyzes potential exposure to Arc-Flash hazards. The outcome of the study establishes Incident Energy levels, Hazard Risk Categories, Flash Protection Boundaries, and required PPE. It also helps define safe work practices.

Flash Protection Boundary – A protection boundary established to protect personnel from Arc-Flash hazards. The Flash Protection Boundary is the distance at which an unprotected worker can receive a second-degree burn to bare skin.

Fuse – An overcurrent protective device consisting of one or more current carrying elements enclosed in a body fitted with contacts, so that the fuse may be readily inserted into or removed from an electrical circuit. The elements are heated by the current passing through them, thus interrupting current flow by melting during specified overcurrent conditions.

Ground Continuity Monitor - A protection relay that continuously monitors a ground conductor and trips if this conductor opens or shorts to the ground-check conductor.

Ground-Fault – Unintentional contact between a phase conductor and ground or equipment frame. The words "ground" and "earth" are used interchangeably when it comes to electrical applications.

Ground-Fault Current – The current that returns to the supply neutral through the ground-fault and the ground-return path.

Ground-Fault Protection – A system that protects equipment from damaging ground-fault current by operating a disconnecting means to open all ungrounded conductors of a faulted circuit. This protection is at current levels less than those required to operate a supply circuit overcurrent device.

Ground-Fault Relay – A protection relay designed to detect a phase-to-ground-fault on a system and trip when current exceeds the pickup setting for greater than the trip time setting.

Hazard Risk Category – A classification of risks (from 0 to 4) defined by NFPA 70E®. Each category requires PPE and is related to incident energy levels.

High-Resistance Grounding – Achieved when a neutral-ground resistor (NGR) is used to limit the current to a low level. Typically high-resistance grounding is 25 A and lower. See Low-Resistance Grounding.

I^2t – See Ampere-Squared-Seconds (I^2t).

IEEE Device Numbers – The devices in switching equipment are referred to by numbers, according to the functions they perform. These numbers are based on a system which has been adopted as standard for automatic switchgear by IEEE. This system is used on connection diagrams, in instruction books and in specifications.

IEC Type 2 Protection – Fused protection for control components that prevents damage to these components under short-circuit conditions. See definition of No Damage.

© 2023 Littelfuse, Inc.

TERMS AND DEFINITIONS

Incident Energy – The amount of thermal energy impressed on a surface generated during an electrical arc at a certain distance from the arc. Typically measured in cal/cm^2.

Instantaneous Peak Current (I_p or I_{peak}) – The maximum instantaneous current value developed during the first half-cycle (180 electrical degrees) after fault inception. The peak current determines magnetic stress within the circuit. See Symmetrical Current.

Insulation Monitoring – Monitoring the resistance from phase to ground to detect insulation breakdown on a system.

Interrupting Capacity (AIC) – The highest available symmetrical rms alternating current (for DC fuses the highest direct current) at which the protective device has been tested, and which it has interrupted safely under standardized test conditions. The device must interrupt all available overcurrents up to its interrupting capacity. Also commonly called interrupting rating. See Interrupting Rating below.

Interrupting Rating (IR, I.R., AIR or A.I.R.) – The highest RMS symmetrical current, at specified test conditions, which the device is rated to interrupt. The difference between interrupting capacity and interrupting rating is in the test circuits used to establish the ratings.

Inverse-time Characteristics – A term describing protective devices whose opening time decreases with increasing current.

IR or I.R. (also AIR or A.I.R.) – See Interrupting Rating above.

Kiloamperes (kA) – 1,000 amperes.

Knife Blade Fuse – Cylindrical or square body fuses with flat blade terminals extending from the fuse body. Knife blades may be designed for insertion into mating fuse clips and/or to be bolted in place. Knife blade terminals may include a rejection feature that mates with a similar feature on a fuse block of the same class.

Leakage Current – Very low level ground-fault current, typically measured in milliamperes (mA, thousandths of amperes).

Limited Approach Boundary – An approach boundary to protect personnel from shock. A boundary distance is established from an energized part based on system voltage. To enter this boundary, unqualified persons must be accompanied with a qualified person and use the proper PPE.

Low-Resistance Grounding – A Resistance Grounded System that allows high currents to flow during a ground-fault. Typically 100A and higher is considered Low-Resistance grounding. See High-Resistance Grounding.

Melting Current (see *Figure 11*) – The current that flows through the fuse from the initiation of an overcurrent condition to the instant arcing begins inside the fuse.

Melting I²t – See Ampere-Squared-Seconds (I^2t).

Melting Time (see *Figure 11*) – The time span from the initiation of an overcurrent condition to the instant arcing begins inside the fuse.

Motor Protection – Overload protection designed to protect the windings of a motor from high current levels. Modern motor protection relays add many additional features, including metering, data logging and communications.

NEC – In general, the National Electrical Code® (NEC®). Specifically, as referenced herein, NEC refers to NFPA Standard 70, *National Electrical Code*, National Fire Protection Association, Quincy, MA 02269.

Sections of the NEC reprinted herein, and/or quotations there from, are done so with permission. The quoted and reprinted sections are not the official position of the National Fire Protection Association which is represented only by the Standard in its entirety. Readers are cautioned that not all authorities have adopted the most recent edition of the NEC; many are still using earlier editions.

Neutral Grounding Resistor (NGR) – A current-limiting resistor connecting the power-system neutral to ground.

No Damage – A term describing the requirement that a system component be in essentially the same condition after the occurrence of a short-circuit as prior to the short-circuit.

Non-renewable Fuse – A fuse that must be replaced after it has opened due to an overcurrent. It cannot be restored to service.

Normal-opening Fuse – See Fast-Acting Fuse.

Nuisance Trip – An undesired change in relay output due to misinterpreted readings.

One-time Fuse – Technically, any non-renewable fuse. However, the term usually refers to UL Class H fuses and to fast acting UL Class K5 fuses. Such fuses are not current-limiting and do not have a rejection feature. One-time fuses are also referred to as "Code" fuses.

Open CT Hazard – An open-circuited CT secondary can develop a dangerously high voltage when the primary is energized.

Overcurrent – Any current larger than the equipment, conductor, or devices are rated to carry under specified conditions.

Overload – An overcurrent that is confined to the normal current path (e.g., not a short-circuit), which if allowed to persist, will cause damage to equipment and/or wiring. Additional information regarding fuse applications for overload protection can be found earlier in this Technical Application Guide.

© 2023 Littelfuse, Inc.

TERMS AND DEFINITIONS

Peak Let-through Current (See *Figure 14*) – The maximum instantaneous current that passes through an overcurrent protective device during its total clearing time when the available current is within its current-limiting range.

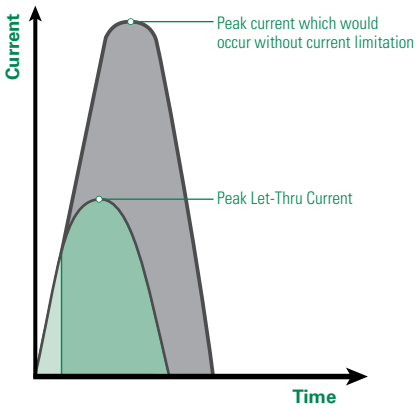

Figure 14 – Peak Let-through Current

Phase Current – The current present in a phase conductor.

Phase Voltage – The voltage measured between a phase conductor and ground.

Power Factor (X/R) – As used in overcurrent protection, power factor is the relationship between the inductive reactance (X) and the resistance (R) in the system during a fault. Under normal conditions a system may be operating at a 0.85 power factor (85%). When a fault occurs, much of the system resistance is shorted out and the power factor may drop to 25% or less. This may cause the current to become asymmetrical. See definition of Symmetrical Current. The UL test circuits used to test fuses with interrupting ratings exceeding 10,000 amperes are required to have a power factor of 20% or less. Since the power factor of test circuits tends to vary during test procedures, actual test circuits are usually set to a 15% power factor. The resulting asymmetrical current has an rms value of 1.33 times the available symmetrical rms. The instantaneous peak current of the first peak after the fault is 2.309 times the available symmetrical rms.

PPE – An acronym for Personal Protective Equipment. It can include clothing, tools, and equipment.

Primary Rating (for CTs) – The current rating of the primary side of a current transformer. The first number in the ratio 500:5 is the primary rating. Under ideal conditions 500 A of primary current flow through the CT will produce 5 A of current out the secondary terminals.

Prohibited Approach Boundary – An approach boundary to protect personnel from shock. Work in this boundary is considered the same as making direct contact with an energized part. Only qualified persons are allowed to enter this boundary and they must use the proper PPE.

Prospective Current – See Available Short-Circuit Current.

Protection Boundaries – Boundaries established to protect personnel from electrical hazards.

Pulsing – Modulating the ground-fault current on a resistance grounded system using a contactor to short out part of the NGR elements (or to open one of two NGRs connected in parallel). Another version of pulsing is imposing a higher frequency signal on power lines and using a wand detector to locate the point of fault on a conductor.

QPL (Qualified Products List) – A list of approved fuses and holders that meet various Military specifications.

Qualified Person – A person who is trained, knowledgeable, and has demonstrated skills on the construction and operation of the equipment, and can recognize and avoid electrical hazards that may be encountered.

Rating – A designated limit of operating characteristics based on definite conditions such as current rating, voltage rating and interrupting rating.

Rectifier Fuse – See High-Speed Semiconductor Fuses.

Rejection Feature – The physical characteristic(s) of a fuse block or fuse holder that prevents the insertion of a fuse unless it has the proper mating characteristics. This may be achieved through the use of slots, grooves, projections, or the actual physical dimensions of the fuse. This feature prevents the substitution of fuses of a Class or size other than the Class and size intended.

Relay – An electrical switch that opens and closes a contact (or contacts) under the control of another circuit. Typically an electromagnet.

Renewable Element (also Renewable Link) – A renewable fuse current-carrying component that is replaced to restore the fuse to a functional condition after the link opens due to an overcurrent condition.

Renewable Fuse – A fuse that may be readily restored to service by replacing the renewable element after operation.

Resistance-Grounded System – An electrical system in which the transformer or generator neutral is connected to ground through a current-limiting resistor. See Solidly Grounded System, Ungrounded System.

Restricted Approach Boundary – An approach boundary to protect personnel from shock. A boundary distance is established from an energized part based on system voltage. Only qualified persons are allowed in the boundary and they must use the proper PPE.

Selective Coordination (See *Figure 15*) – In a selectively coordinated system, only the protective device immediately on the line side of an overcurrent opens. Upstream protective devices remain closed. All other equipment remains in service, which simplifies the identification and location of overloaded

© 2023 Littelfuse, Inc.

TERMS AND DEFINITIONS

equipment or short-circuits. For additional information, refer to the Selective Coordination pages of this Technical Application Guide.

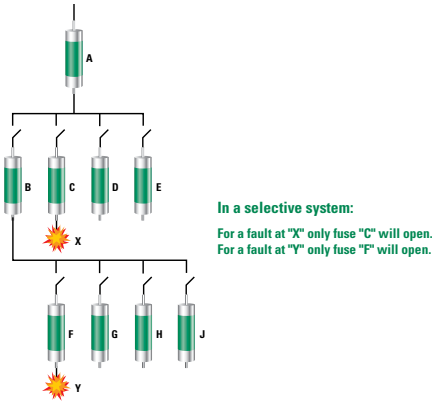

Figure 15 – Selective Coordination Example

Semiconductor Fuse – (Also known as High-Speed Fuses) A fuse specifically designed to protect semiconductors such as silicon rectifiers, silicon-controlled rectifiers, thyristors, transistors, and similar components.

Sensitive Ground-Fault Protection – Protection designed to accurately detect extremely low ground-fault current levels without nuisance tripping.

Shock – A trauma subjected to the body by electrical current. When personnel come in contact with energized conductors, it can result in current flowing through their body often causing serious injury or death.

Short-Circuit (See *Figure 16*) – A current flowing outside its normal path, caused by a breakdown of insulation or by faulty equipment connections. In a short-circuit, current bypasses the normal load. Current is determined by the system impedance (AC resistance) rather than the load impedance. Short-circuit currents may vary from fractions of an ampere to 200,000 amperes or more.

Short-Circuit Current Rating (SCCR) – The prospective symmetrical fault current at a nominal voltage to which an apparatus or system is able to be connected without sustaining damage exceeding defined acceptance criteria.

Short-Circuit Rating – The maximum RMS symmetrical short-circuit current at which a given piece of equipment has been tested under specified conditions, and which, at the end of the test is in essentially the same condition as prior to the test. Short-circuit ratings (also called withstand ratings) apply to equipment that will be subjected to fault currents, but which are not required to interrupt them. This includes switches, busway (bus duct), switchgear and switchboard structures, motor control centers and transformers.

Most short-circuit ratings are based on tests which last three complete electrical cycles (0.05 seconds). However, if the equipment is protected during the test by fuses or by a circuit breaker with instantaneous trips, the test duration is the time required for the overcurrent protective device to open the circuit.

When protected as such during testing, the equipment instructions and labels must indicate that the equipment shall be protected by a given fuse class and rating or by a specific make, type, and rating of circuit breaker. Circuit breakers equipped with short-delay trip elements instead of instantaneous trip elements have withstand (short-circuit) ratings in addition to their interrupting rating. The breaker must be able to withstand the available fault current during the time that opening is delayed.

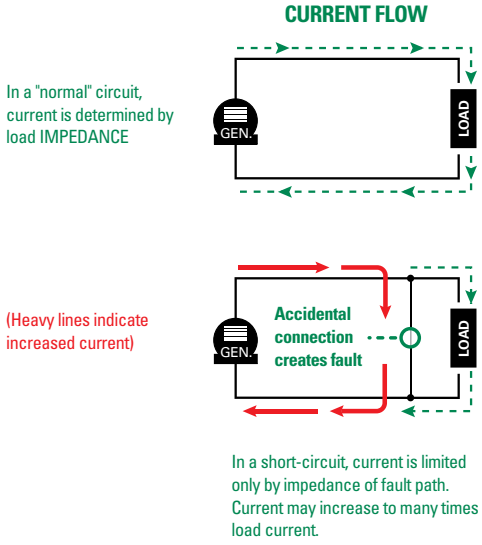

Figure 16 – Current Flow in Normal and Short Circuit Situations

Solidly Grounded System – An electrical system in which the neutral point of a wye connected supply transformer is connected directly to ground.

Symmetrical Current – The terms "Symmetrical Current" and "Asymmetrical Current" describe an AC wave symmetry around the zero axis. The current is symmetrical when the peak currents above and below the zero axis are equal in value, as shown in *Figure 17 (next page)*. If the peak currents are not equal, as shown in *Figure 18*, the current is considered asymmetrical. The degree of asymmetry during a fault is determined by the change in power factor (X/R) and the point in the voltage wave when the fault occurs. See definition of Power Factor. In general, lower short-circuit power factors increase the degree of asymmetry.

© 2023 Littelfuse, Inc.

TERMS AND DEFINITIONS

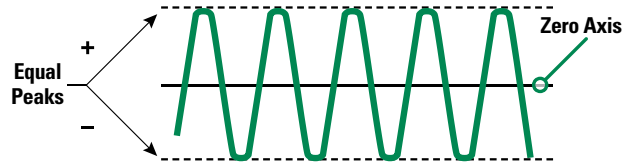

Figure 17 – Symmetrical Current

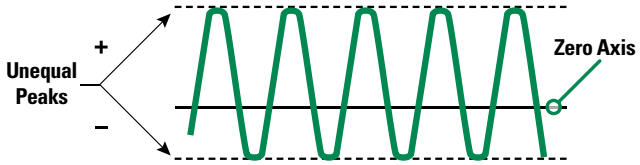

Figure 18 – Asymmetrical Current

Threshold Current – The minimum current for a given fuse size and type at which the fuse becomes current-limiting. It is the lowest value of available rms symmetrical current that will cause the device to begin opening within the first 1/4 cycle (90 electrical degrees) and completely clear the circuit within 1/2 cycle (180 electrical degrees). The approximate threshold current can be determined from the fuse's peak let-through charts. (See *Figure 19*.)

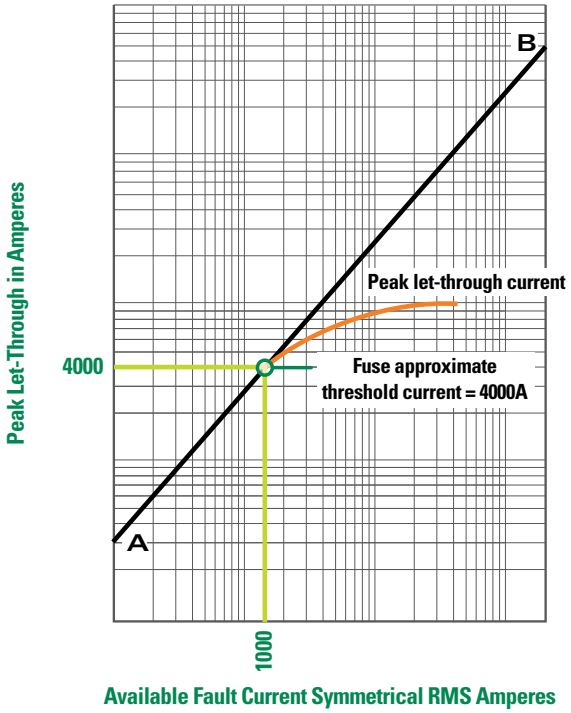

Figure 19 – Determining Threshold Current from Peak Let-through Chart

Threshold Ratio – Consists of the threshold current divided by the ampere rating of a specific type or class of overcurrent device. A fuse with a threshold ratio of 15 becomes current-limiting at 15 times its current rating.

Time-Delay Fuse – Fuses designed with an intentional, built-in delay in opening. When compared to fast-opening fuses, time-delay fuses have an increased opening time for overcurrents between approximately 200% and 600% of the fuse's current rating. Time-delay is indicated on the fuse label by "Time-Delay", "T-D", "D", or other suitable marking. Time-delay in the overload range (200%-600% of the fuse rating) permits the fuse to withstand system switching surges, motor starting currents, and other harmless temporary overcurrents.

UL Standards require time-delay Class H, K, RK1, RK5, and J fuses to hold 500% of their normal current rating for a minimum of 10 seconds. They must also pass the same opening time tests (135% and 200% of current rating) as fast acting fuses.

Time-delay Class CC, CD, G, Plug, and Miscellaneous fuses have different requirements. For more information, please refer to the corresponding descriptions provided in the Product Information Section.

For the UL Standard, Class L fuses have no standard time-delay. The time-delay varies from series to series for a given manufacturer, as well as from manufacturer to manufacturer. For reference, Littelfuse KLPC series POWR-PRO® fuses hold 500% of rated current for a minimum of 10 seconds.

Ungrounded System – An electrical system in which no point in the system is intentionally grounded. This was most common in process industries where continuity of service during a single-phase-to-ground-fault was required.

Unqualified Person – A person that does not possess all the skills and knowledge or has not been trained for a particular task.

Voltage Rating – The maximum rms AC voltage and/or the maximum DC voltage at which the fuse is designed to operate. For example, fuses rated 600 volts and below may be applied at any voltage less than their rating. There is no rule for applying AC fuses in DC circuits such as applying the fuse at half its AC voltage rating. Fuses used on DC circuits must have DC ratings.

Withstand Rating – See Short-Circuit.

© 2023 Littelfuse, Inc.

MOTOR PROTECTION TABLES

Selection of Class RK5 Fuses (FLNR_ID / FLSR_ID / IDSR Series) or POWR-PRO® Class RK1 Fuses (LLNRK / LLSRK / LLSRK_ID Series) Based on Motor Full Load Amps

Using AC Motor Protection Tables to Select Fuse Ratings

Time-delay RK1 and RK5 fuse ratings selected in accordance with the following recommendations also meet NEC® requirements for Motor Branch circuit and Short-Circuit Protection.

Selecting Fuses for Motor Running Protection Based on Motor Horsepower

Motor horsepower and motor Full Load Amperes (FLA) shown are taken from NEC® Tables 430.248 through 430.250 covering standard speed AC motors with normal torque characteristics. Fuse ratings for motors with special characteristics may need to vary from given values.

If motor running protection will be provided by the fuses, select fuse ratings for correct type of motor from Motor Protection Table Columns headed, "Without Overload Relays."

If overload relays will provide principal motor running protection, select fuse ratings for correct type of motor from Motor Protection Table Columns headed, "Back-up Running Protection" or "With Overload Relays." Fuse ratings selected from these columns coordinate with most UL Class 10 and 20 overload relays which covers over 90% of motor applications.

Selecting Fuses for Motor Running Protection Based on Motor Actual Full Load Currents

Better protection is achieved when fuse ratings are based on motor actual FLA obtained from motor nameplates. Locate motor nameplate FLA in the column appropriate for the type of motor and type of protection required. Then select the corresponding ampere rating of the fuse from the first column of that line.

TIME DELAY UL CLASS RK1 OR RK5 FUSE AMPERE RATING	MOTOR RUNNING PROTECTION (USED WITHOUT PROPERLY SIZED OVERLOAD RELAYS) MOTOR FULL-LOAD AMPS		BACK-UP MOTOR RUNNING PROTECTION (USED WITH PROPERLY SIZED OVERLOAD RELAYS) MOTOR FULL-LOAD AMPS	
	MOTOR SERVICE FACTOR OF 1.15 OR GREATER OR WITH TEMP. RISE NOT OVER 40°C.	MOTOR SERVICE FACTOR LESS THAN 1.15 OR WITH TEMP. RISE GREATER THAN 40°C.	MOTOR SERVICE FACTOR OF 1.15 OR GREATER OR WITH TEMP. RISE NOT OVER 40°C.	MOTOR SERVICE FACTOR LESS THAN 1.15 OR WITH TEMP. RISE GREATER THAN 40°C
1/10	0.08-0.09	0.09-0.10	0-0.08	0-0.09
1/8	0.10-0.11	0.11-0.125	0.09-0.10	0.10-0.11
15/100	0.12-0.15	0.14-0.15	0.11-0.12	0.12-0.13
2/10	0.16-0.19	0.18-0.20	0.13-0.16	0.14-0.17
1/4	0.20-0.23	0.22-0.25	0.17-0.20	0.18-0.22
3/10	0.24-0.30	0.27-0.30	0.21-0.24	0.23-0.26
4/10	0.32-0.39	0.35-0.40	0.25-0.32	0.27-0.35
1/2	0.40-0.47	0.44-0.50	0.33-0.40	0.36-0.43
6/10	0.48-0.60	0.53-0.60	0.41-0.48	0.44-0.52
8/10	0.64-0.79	0.70-0.80	0.49-0.64	0.53-0.70
1	0.80-0.89	0.87-0.97	0.65-0.80	0.71-0.87
1 1/8	0.90-0.99	0.98-1.08	0.81-0.90	0.88-0.98
1 1/4	1.00-1.11	1.09-1.21	0.91-1.00	0.99-1.09
1 4/10	1.12-1.19	1.22-1.30	1.01-1.12	1.10-1.22
1 1/2	1.20-1.27	1.31-1.39	1.13-1.20	1.23-1.30
1 6/10	1.28-1.43	1.40-1.56	1.21-1.28	1.31-1.39
1 8/10	1.44-1.59	1.57-1.73	1.29-1.44	1.40-1.57
2	1.60-1.79	1.74-1.95	1.45-1.60	1.58-1.74
2 1/4	1.80-1.99	1.96-2.17	1.61-1.80	1.75-1.96
2 1/2	2.00-2.23	2.18-2.43	1.81-2.00	1.97-2.17
2 8/10	2.24-2.39	2.44-2.60	2.01-2.24	2.18-2.43
3	2.40-2.55	2.61-2.78	2.25-2.40	2.44-2.60
3 2/10	2.56-2.79	2.79-3.04	2.41-2.56	2.61-2.78
3 1/2	2.80-3.19	3.05-3.47	2.57-2.80	2.79-3.04
4	3.20-3.59	3.48-3.91	2.81-3.20	3.05-3.48
4 1/2	3.60-3.99	3.92-4.34	3.21-3.60	3.49-3.91
5	4.00-4.47	4.35-4.86	3.61-4.00	3.92-4.35
5 6/10	4.48-4.79	4.87-5.21	4.01-4.48	4.36-4.87
6	4.80-4.99	5.22-5.43	4.49-4.80	4.88-5.22
6 1/4	5.00-5.59	5.44-6.08	4.81-5.00	5.23-5.43
7	5.60-5.99	6.09-6.52	5.01-5.60	5.44-6.09
7 1/2	6.00-6.39	6.53-6.95	5.61-6.00	6.10-6.52
8	6.40-7.19	6.96-7.82	6.01-6.40	6.53-6.96
9	7.20-7.99	7.83-8.69	6.41-7.20	6.97-7.83
10	8.00-9.59	8.70-10.00	7.21-8.00	7.84-8.70
12	9.60-11.99	10.44-12.00	8.01-9.60	8.71-10.43
15	12.00-13.99	13.05-15.00	9.61-12.00	10.44-13.04
17 1/2	14.00-15.99	15.22-17.39	12.01-14.00	13.05- 15.21
20	16.00-19.99	17.40-20.00	14.01-16.00	15.22-17.39
25	20.00-23.99	21.74-25.00	16.01-20.00	17.40-21.74
30	24.00-27.99	26.09-30.00	20.01-24.00	21.75-26.09
35	28.00-31.99	30.44-34.78	24.01-28.00	26.10-30.43
40	32.00-35.99	34.79-39.12	28.01-32.00	30.44-37.78
45	36.00-39.99	39.13-43.47	32.01-36.00	37.79-39.13
50	40.00-47.99	43.48-50.00	36.01-40.00	39.14-43.48
60	48.00-55.99	52.17-60.00	40.01-48.00	43.49-52.17
70	56.00-59.99	60.87-65.21	48.01-56.00	52.18-60.87
75	60.00-63.99	65.22-69.56	56.01-60.00	60.88-65.22
80	64.00-71.99	69.57-78.25	60.01-64.00	65.23-69.57
90	72.00-79.99	78.26-86.95	64.01-72.00	69.58-78.26
100	80.00-87.99	86.96-95.64	72.01-80.00	78.27-86.96
110	88.00-99.99	95.65-108.69	80.01-88.00	86.97-95.65
125	100.00-119.99	108.70-125.00	88.01-100.00	95.66-108.70
150	120.00-139.99	131.30-150.00	100.01-120.00	108.71-130.43
175	140.00-159.99	152.17-173.90	120.01-140.00	130.44-152.17
200	160.00-179.99	173.91-195.64	140.01-160.00	152.18-173.91
225	180.00-199.99	195.65-217.38	160.01-180.00	173.92-195.62
250	200.00-239.99	217.39-250.00	180.01-200.00	195.63-217.39
300	240.00-279.99	260.87-300.00	200.01-240.00	217.40-260.87
350	280.00-319.99	304.35-347.82	240.01-280.00	260.88-304.35
400	320.00-359.99	347.83-391.29	280.01-320.00	304.36-347.83
450	360.00-399.99	391.30-434.77	320.01-360.00	347.84-391.30
500	400.00-479.99	434.78-500.00	360.01-400.00	391.31-434.78
600	480.00-600.00	521.74-600.00	400.01-480.00	434.79-521.74



Motor Protection White Paper

Download our white paper on motor protection at **littelfuse.com/technicalcenter**

© 2023 Littelfuse, Inc.

MOTOR PROTECTION TABLES

Selection of Class RK5 Fuses (FLNR_ID / FLSR_ID / IDSR Series) or POWR-PRO® Class RK1 Fuses (LLNRK / LLSRK / LLSRK_ID Series) Based on Motor Horsepower

MOTOR HP	FULL LOAD AMPS	WITHOUT OVERLOAD RELAYS		WITH OVERLOAD RELAYS		SWITCH OR FUSE CLIP RATING
		S.F. = 1.15 OR MORE, TEMP RISE NOT OVER 40°C	S.F. = LESS THAN 1.15 OR TEMP RISE MORE THAN 40°C	S.F. = 1.15 OR MORE, TEMP RISE NOT OVER 40°C	S.F. = LESS THAN 1.15 OR TEMP RISE MORE THAN 40°C	
120 VOLT 1-PHASE MOTORS (120V CIRCUIT)						
1/6	4.4	5	5	5 6/10	5 6/10	30
1/4	5.8	7	6 1/4	7 1/2	7	30
1/3	7.2	9	8	9	9	30
1/2	9.8	12	10	15	12	30
3/4	13.8	15	15	17 1/2	17 1/2	30
1	16	20	17 1/2	20	20	30
1 1/2	20	25	20	25	25	30
2	24	30	25	30	30	30
230 VOLT 1-PHASE MOTORS (240V CIRCUIT)						
1/6	2.2	2 1/2	2 1/2	2 8/10	2 8/10	30
1/4	2.9	3 1/2	3 2/10	4	3 1/2	30
1/3	3.6	4 1/2	4	4 1/2	4 1/2	30
1/2	4.9	5 6/10	5 6/10	6 1/4	6	30
3/4	6.9	8	7 1/2	9	8	30
1	8	10	9	10	10	30
1 1/2	10	12	10	15	12	30
2	12	15	12	15	15	30
3	17	20	17 1/2	25	20	30
5	28	35	30*	35	35	60
7 1/2	40	50	45	50	50	60
10	50	60	50	70	60	60
200 VOLT 3-PHASE MOTORS (208V CIRCUIT)						
1/2	2.5	3	2 8/10	3 2/10	3	30
3/4	3.7	4 1/2	4	5	4 1/2	30
1	4.8	6	5 6/10	6 1/4	6	30
1 1/2	6.9	8	7 1/2	7 1/2	8	30
2	7.8	9	8	10	9	30
3	11	12	12	15	15	30
5	17.5	20	20	25	25	30
7 1/2	25.3	30*	25*	35	30*	60
10	32.2	40	35	45	40	60
15	48.3	60	50	70†	60	60
20	62.1	75	70	80	75	100
25	78.2	90	80	100	90	100
30	92	110	100*	125	110	200
40	120	150	125	150	150	200
50	150	175	150	200	175	200
60	177	200*	200*	225	225	400
75	221	250	250	300	300	400
100	285	350	300	400	350	400
125	359	400*	400*	450	450	600
150	414	500	450	600	500	600
230 VOLT 3-PHASE MOTORS (240V CIRCUIT)						
1/2	2.2	2 8/10	2 1/2	2 8/10	2 8/10	30
3/4	3.2	4	3 1/2	4	4	30
1	4.2	5	4 1/2	5 6/10	5	30
1 1/2	6.0	7 1/2	6 1/4	7 1/2	7 1/2	30
2	6.8	8	7 1/2	9	8	30
3	9.6	12	10	12	12	30
5	15.2	17 1/2	17 1/2	20	17 1/2	30
7 1/2	22	25	25	30	30	30
10	28	35	30*	35	35	60
15	42	50	45	60	50	60
20	54	60*	60*	70	70	100
25	68	80	75	90	80	100
30	80	100	90	100	100	100
40	104	125	110	150	125	200
50	130	150	150	175	150	200
60	154	175	175	200	200	200
75	192	225	200*	250	225	400
100	248	300	250	350	300	400
125	312	350	350	400	400	400
150	360	450	400*	450	450	600
200	480	600	500	600	600	600

MOTOR HP	FULL LOAD AMPS	WITHOUT OVERLOAD RELAYS		WITH OVERLOAD RELAYS		SWITCH OR FUSE CLIP RATING
		S.F. = 1.15 OR MORE, TEMP RISE NOT OVER 40°C	S.F. = LESS THAN 1.15 OR TEMP RISE MORE THAN 40°C	S.F. = 1.15 OR MORE, TEMP RISE NOT OVER 40°C	S.F. = LESS THAN 1.15 OR TEMP RISE MORE THAN 40°C	
460 VOLT 3-PHASE MOTORS (480V CIRCUIT)						
1/2	1.1	1 4/10	1 1/4	1 4/10	1 4/10	30
3/4	1.6	2	1 8/10	2	2	30
1	2.1	2 1/2	2 1/4	2 8/10	2 1/2	30
1 1/2	3.0	3 1/2	3 2/10	4	3 1/2	30
2	3.4	4	3 1/2	4 1/2	4	30
3	4.8	5 6/10	5	6	5 6/10	30
5	7.6	9	8	10	9	30
7 1/2	11	12	12	15	15	30
10	14	17 1/2	15	17 1/2	17 1/2	30
15	21	25	20	30	25	30
20	27	30*	30*	35	35	60
25	34	40	35	45	40	60
30	40	50	45	50	50	60
40	54	60*	60*	70	60*	100
50	65	80	70	90	75	100
60	77	90	80	100	90	100
75	96	110	110	125	125	200
100	124	150	125	175	150	200
125	156	175	175	200	200	200
150	180	225	200*	225	225	400
200	240	300	250	300	300	400
575 VOLT 3-PHASE MOTORS (600V CIRCUIT)						
1/2	0.9	1 1/8	1	1 1/8	1 1/8	30
3/4	1.3	1 6/10	1 4/10	1 6/10	1 6/10	30
1	1.7	2	1 8/10	2 1/4	2	30
1 1/2	2.4	3	2 1/2	3	3	30
2	2.7	3 2/10	2 8/10	3 1/2	3 2/10	30
3	3.9	4 1/2	4	5	4 1/2	30
5	6.1	7 1/2	7	8	7 1/2	30
7 1/2	9	10	10	12	12	30
10	11	12	12	15	15	30
15	17	20	17 1/2	25	20	30
20	22	25	25	30	30	30
25	27	30*	30*	35	35	60
30	32	40	35	40	40	60
40	41	50	45	60	50	60
50	52	60	60	70†	60	60
60	62	75	70	80	75	100
75	77	90	80	100	90	100
100	99	110	110	125	125	200
125	125	150	125	175	150	200
150	144	175	150	200	175	200
200	192	225	200*	250	225	400

NOTES

S.F. = Motor Service Factor
* Fuse Reducers Required
† 100 Amp Switch Required



Motor Protection White Paper

Download our white paper on motor protection at **littelfuse.com/technicalcenter**

© 2023 Littelfuse, Inc.

MOTOR PROTECTION TABLES

Selection of POWR-PRO® Class J Fuses (JTD_ID / JTD Series) Based on Motor Full Load Amps

MOTOR F.L.A.	JTD_ID / JTD AMPERE RATING	MOTOR F.L.A.	JTD_ID / JTD AMPERE RATING	MOTOR F.L.A.	JTD_ID / JTD AMPERE RATING
0.00 – 0.60	8/10	12.1 – 14.5	17 1/2	76.1 – 84.0	110
0.61 – 0.80	1	14.6 – 17.0	20	84.1 – 90.0	125
0.81 – 1.00	1¼	17.1 – 21.0	25	90.1 – 102	150
1.01 – 1.20	1½	21.1 – 25.0	30	103 – 125	175
1.21 – 1.65	2	25.1 – 28.5	35	126 – 144	200
1.66 – 2.00	2½	28.6 – 34.0	40	145 – 162	225
2.01 – 2.40	3	34.1 – 37.0	45	163 – 180	250
2.41 – 3.30	4	37.1 – 41.0	50	181 – 204	300
3.31 – 4.10	5	41.1 – 48.0	60	205 – 240	350
4.11 – 4.90	6	48.1 – 52.0	70	241 – 288	400
4.91 – 6.40	8	52.1 – 59.0	80	289 – 312	450
6.41 – 8.00	10	59.1 – 66.0	90	313 – 360	500
8.01 – 9.80	12	66.1 – 76.0	100	361 – 432	600
9.81 – 12.0	15				

NOTE: For severe motor starting conditions, fuses may be sized up to 225% motor F.L.A. (See NEC® Article 430.52 for Exceptions)

Selection of CCMR Time-Delay Fuses Based on Motor Full Load Amps

MOTOR FULL LOAD CURRENT (F.L.A.)						CCMR AMPERE RATING
FOR MOTORS WITH AN ACCELERATION TIME OF 2 SECONDS OR LESS		FOR MOTORS WITH AN ACCELERATION TIME OF 5 SECONDS OR LESS		FOR MOTORS WITH AN ACCELERATION TIME OF 8 SECONDS OR LESS		
MIN. F.L.A. (1)	MAX F.L.A. (3)	MIN. F.L.A. (1)	MAX F.L.A. (3)	MIN F.L.A. (2)	MAX F.L.A. (3)	
0.2	0.2	0.2	0.2	0.2	0.2	3/10
0.3	0.4	0.3	0.4	0.3	0.3	½
0.4	0.6	0.4	0.5	0.4	0.5	8/10
0.5	0.7	0.5	0.6	0.5	0.6	1
0.6	1.0	0.6	0.9	0.6	0.8	1¼
0.8	1.1	0.8	1.0	0.7	0.9	1½
0.9	1.3	0.9	1.1	0.8	1.0	1 8/10
1.1	1.4	1.1	1.2	0.9	1.1	2
1.2	2.1	1.2	2.1	1.2	1.8	2½
1.5	2.6	1.5	2.6	1.4	2.3	3
1.8	3.0	1.8	3.0	1.6	2.6	3½
2.1	3.4	2.1	3.2	1.8	2.8	4
2.3	3.9	2.3	3.3	2.0	2.8	4½
2.6	4.3	2.6	3.4	2.3	2.8	5
2.9	4.8	2.9	3.7	2.5	3.1	5 6/10
3.3	5.2	3.3	4.0	2.7	3.4	6
3.5	5.4	3.5	4.1	2.8	3.5	6¼
3.6	5.7	3.6	4.2	3.2	3.7	7
4.1	5.8	4.1	4.3	3.4	3.8	7½
4.3	6.2	4.3	4.6	3.6	4.2	8
4.6	6.9	4.6	5.2	4.0	4.5	9
5.2	7.7	5.2	5.8	4.5	4.9	10
5.8	8.9	5.8	6.6	5.4	5.5	12
6.9	10.0	6.9	7.7	6.7	6.7	15
8.9	13.5	8.9	10.0	6.8	9.0	20
11.5	15.8	11.2 (2)	11.8	9.0	11.0	25
14.3	17.8	13.4 (2)	13.4	10.0	15.0	30
20.7	23.3	16.1	17.9	15.6	15.9	35
23.7	26.7	18.4	20.5	17.8	18.2	40
26.6	30.0	20.7	23.1	20.0	20.4	45
30.0	33.3	23.0	25.6	22.3	22.7	50
35.5	40.0	27.6	30.1	26.7	27.3	60

1 Based on NEC® requirement limiting the rating of time-delay fuses to 175% of motor F.L.A., or next higher rating.

2 Based on NEC® exception permitting fuse rating to be increased, but not to exceed, 225% motor F.L.A., however per NEC® Article 430.52 Class CC (0-30) fuses can now be sized up to 400% of motor F.L.A.

3 Based on Littelfuse CCMR time-delay characteristics.

NOTE: These values were calculated for motors with Locked Rotor Current (LRA), not exceeding the following values:

MOTOR F.L.A.	*LRA
0.00 – 1.00	850%
1.01 – 2.00	750%
2.01 – 10.0	650%
10.1 – 17.8	600%

*If motor LRA varies from these values, contact Littelfuse.

© 2023 Littelfuse, Inc.

CONDENSED CROSS REFERENCE GUIDE

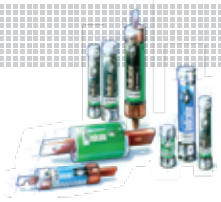

This cross reference covers the most popular fuses for which there is a similar Littelfuse standard item. Furnished for your convenience, it is meant to serve as a guide for product selection. We suggest you check all applicable specifications before making substitutions. For special applications, more complete information, and for fuse block and medium voltage fuse cross referencing, visit Littelfuse.com or call 1-800-TEC-FUSE (1-800-832-3873).

Competitor	Littelfuse
10KOTN	**NLN**
10KOTS	**NLS**
50KOTN	**NLN**
50KOTS	**NLS**
170M	**PSR**
A013F	**L15S**
A015F	**L15S**
A015R	**L15S**
A025F	**L25S**
A050F	**L50S**
A060F	**L60S**
A070F	**L70S**
A13X	**L15S**
A25X	**L25S** †
A2D-R	**LLNRK** §
A2K-R	**KLNR**
A3T	**JLLN**
A4BQ	**KLPC**
A4BT	**KLLU or KLPC**
A4BY	**KLPC or KLLU**
A4J	**JLS**
A50P (type 1 & 4)	**L50S**
A50QS	**L50QS**
A60X	**L60S**
A6D-R	**LLSRK_ID** §
A6K-R	**KLSR**
A6T	**JLLS**
A70P	**L70S**
A70QS	**L70QS**
ABC	**314**
ACK	**CCK**
AG	**SLC**
AGA	**AGA**
AGC	**312**
AGU (1-30A)	**BLN**
AGW	**AGW**
AJT	**JTD_ID**
AMG	**MEG**
AMI	**MID**
ANL	**CNL** §
ANN	**CNN_E**
ASO	**SPF**
ATC	**ATO (287)**
AT-DE	**FLNR_ID** ‡
ATDR	**CCMR** §
ATM (Mersen)	**KLKD**
ATMR	**KLKR** §
ATQ	**FLQ**
ATQR	**KLDR**
AX	**481**
A_UD	**PSR**
BAF	**BLF**
BAN	**BLN**
BBS	**BLS**

Competitor	Littelfuse
C519	**229**
C520	**225**
CHSF	**L50QS**
CJ	**JLS**
CJS	**JLS**
CLF	**KLPC or KLLU**
CLL	**KLLU or KLPC**
CLU	**KLLU or KLPC**
CM	**BLF**
CRN-R	**FLNR_ID** ‡
CRS-R	**FLSR_ID**
CTN-R	**KLNR**
CTS-R	**KLSR**
DCT	**SPF** †
DFJ	**LDFJ**
EBS	**BLS**
ECNR	**FLNR_ID** ‡
ECSR	**FLSR_ID**
ERN	**FLNR** +
ERS	**FLSR** +
FNA	**FLA**
FNM	**FLM**
FNQ	**FLQ**
FNQ-R	**KLDR**
FRN-R	**FLNR_ID** ‡
FRS-R	**FLSR_ID**
FWA	**L15S** †§
FWH	**L50QS**
FWP	**L70QS**
FWX	**L25S** * †
GDA	**216**
GDB	**217**
GDC	**218**
GDL	**313**
GEB	**LEB**
GEBN	**LET**
GFA	**251**
GFN	**FLA**
GGC	**312**
GGM	**235**
GLR	**LGR**
GMA	**235**
GMD	**239**
GMT	**481**
HCLR	**KLKR**
HCTR	**KLDR**
HEB	**LEB**
HET	**LET**
HLR	**LHR**
HP10M	**SPF**
HP6J	**SPFJ** *
HSJ	**LDFJ**
JDL	**JTD_ID**
JFL	**JLS**

Competitor	Littelfuse
JHC	**JTD_ID**
JHL	**LDFJ**
JJN	**JLLN**
JJS	**JLLS**
JKS	**JLS**
KAA	**L15S**
KAB	**L25S**
KAC	**KLC**
KBH	**L50S**
KLM	**KLKD**
KLU	**KLLU or KLPC**
KN	**KLNR**
KON	**NLN**
KOS	**NLS**
KRP-C	**KLPC**
KS	**KLSR**
KTK	**KLK**
KTKR	**KLKR**
KTNR	**KLNR**
KTSR	**KLSR**
KTU 601-2000A	**LDC**
KTU 2500-6000A	**KLPC**
LCL	**KLPC or KLLU**
LCU	**LDC**
LENRK	**LLNRK**
LESRK	**LLSRK_ID**
LKU	**KLLU**
LONRK	**LLNRK**
LOSRK	**LLSRK_ID**
LPCC	**CCMR**
LPJ (SP)	**JTD_ID**
LPNRK (SP)	**LLNRK** §
LPSRK (SP)	**LLSRK_ID**
MCL	**KLK**
MCR	**251**
MDA	**326**
MDL	**313**
MDQ	**313**
MDV	**315**
MDX	**313**
MEN	**FLM**
MEQ	**FLQ**
MID	**FLA**
MOF	**BLN**
MOL	**BLF**
MTH	**312**
NCLR	**KLNR**
NON	**NLN**

Competitor	Littelfuse
NOS	**NLS**
NRN	**NLN**
NRN (15-60A)	**NLKP**
NRS	**NLS**
OT	**NLN**
OTM	**BLF or BLN**
OTN	**NLN**
OTS	**NLS**
PC_UD	**PSR**
PSC	**PSR**
PV-(1-30)A10F	**SPF**
PV-(50A-200A)1XL15	**SPNH**
REN	**FLNR** +
RES	**FLSR** +
RF	**FLNR** +
RFA	**L15S**
RFC	**KLC**
RFL (750V)	**L70S (700 V)**
RFN (Mersen)	**FLNR** +
RFS (Mersen)	**FLSR** +
RFV	**L50S**
RHN	**KLNR**
RHS	**KLSR**
S	**SOO**
SA	**SAO**
SC	**SLC**
SEC	**SLC**
SF13X	**L15S**
SF25X	**L25S**
SF50P	**L50S**
SF60X	**L60S**
SF70P	**L70S**
SFE	**SFE**
SL	**SLO**
T	**TOO**
TJN	**JLLN**
TJS	**JLLS**
TL	**TLO**
TR	**FLNR_ID** ‡/§
TRM	**FLM**
TRN-R	**FLNR_ID** ‡/§
TRS	**FLSR_ID** §
TRS-R	**FLSR_ID** §
XL25X	**L25S**
XL50F	**L50S** *
XL70F	**L70S** *

A fuse may be used in circuits where the fuse's voltage rating is equal to or greater than the circuit voltage, unless otherwise stated on the fuse. For example, the FLSR_ID indicating fuse has a voltage rating of 75-600 volts. This fuse can be used on 600 volts, 480 volts, 250 volts, 125 volts, or 75 volts. Never use a fuse in a circuit having a higher rated voltage than the fuse.

* Check specific mounting dimensions before substituting.
† Check characteristics and dimensions for application before substituting.
‡ For 1/10 - 30 amperes, order non-indicating FLNR series fuses.
§ Verify voltage for DC applications.
+ Littelfuse product is a non-renewable fuse.

© 2023 Littelfuse, Inc.

ALPHANUMERIC INDEX

Product Name	Page Number
097023	122
150322	131
1LFS Series	121
215 Series	35
216 Series	35
217 Series	35
218 Series	35
224 Series	34
225 Series	34
229 Series	34
230 Series	34
235 Series	35
239 Series	35
251 Series	33
273 Series	33
287 Series	36
297 Series	36
299 Series	36
312 Series	34
313 Series	34
314 Series	34
315 Series	34
318 Series	34
324 Series	34
325 Series	34
326 Series	34
342 Series	125
345 Series	126
354 Series	121
451 Series	33
477 Series	33
481 Series	51
505 Series	33
571 Series	117
572 Series	117
ATO Series	36
BLF Series	30
BLN Series	30
BLS Series	31
Box Cover Units	167
Bus Bar Series	119
BVSP Series	164
Cable Limiters	67
CCMR Series	27
Class CC	27
Class CD	27
Class G	26
Class J	21
Class K5	20
Class L	8

Product Name	Page Number
Class RK1	13
Class RK5	16
Class T	24
CNL Series	64
CNN / CNN_E Series	64
Coordination Panels	155
Cylindrical Fuses	68
Definitions	184
Displays	169
Distribution Blocks	130
E-Rated Fuses	42
Electronic Fuses	32
FBDIN1	110
FLA Series	31
FLM Series	30
FLNR Series	17
FLNR_ID Series	17
FLQ Series	30
FLSR Series	17
FLSR_ID Series	17
FLU Series	31
Fork-Lift Fuses	64
FRCK Series	168
Fuse Blocks, Fuse Holders	90
Fuse Classifications	182
Fuse Reducers	166
Fuseology	171
GDB Series	137
GFP	122
HAZGARD™	64
High-Speed Fuses	70
IDSR Series	16
In-Line Fuse Holders	148
JCASE Series	37
JLLN Series	24
JLLS Series	24
JLS Series	22
JTD/JTD_ID Series	21
KLC Series	81
KLDR Series	28
KLK Series	30
KLKD Series	30
KLKR Series	28
KLLU Series	9
KLNR Series	15
KLPC Series	8
KLQ Series	31
KLSR Series	15
L15S Series	85
L17T Series	50

Product Name	Page Number
L25S Series	81
L50QS Series	75
L50S Series	81
L60030C, L60030M Series	107
L60030MPCB	103
L60S Series	81
L70QS Series	78
L70S Series	83
LCC Series	122
LCP Series	155
LD Series	130
LDC Series	10
LEB Series	148
LEC Series	148
LET Series	148
LEX Series	148
LEX YY Series	152
LEXT YY Series	152
LEY Series	148
LF Series Covers	111
LFC600	107
LFCL Series	67
LFFB003	123
LFG480, LFG600 Series	105
LFH250, LFH600 Series	94
LFJ 1000V Series	114
LFJ600 Series	91
LFNH	60
LFPSJ	118
LFPXV	113
LFR250, LFR600 Series	91
LFT300, LFT600 Series	100
LGR Series	66
LHFB	123
LHR Series	66
Live Parts	48
LLNRK Series	13
LLSRK/ LLSRK_ID Series	13
LMF Series	66
LPBC Series	130
LPFP	122
LPS	157
LPSC	117
LPSM	117
LPSM-QC	120
LPXV Series	112
LRU Series	166
LS Series	130
LSCR Series	127
LSCY	167

© 2023 Littelfuse, Inc.

ALPHANUMERIC INDEX

Product Name	Page Number
LSKA	167
LSOU	167
LSOW	167
LSOX	167
LSOY	167
LSOY-B	167
LSRU	167
LSRW	167
LSRX	167
LSRY	167
LSSU	167
LSSW	167
LSSX	167
LSSY	167
LSTY	167
LTFD Series	55
LVSP Series	163
MAXI Series	36
Medium Voltage	39
MEGA Series	65
MFP	122
Midget Fuses	30
MINI Series	36
MOV	161
MROplus	3
NLKP Series	20
NLN Series	20
NLS Series	20
OEM Products	69
Overvoltage Suppression	161
Plug Fuses	65
Potential Transformer	47
POWR-BLOKS™	130
POWR-PRO® Fuses	3
Pre-Engineered Solutions	154
PSR Series	171
R-Rated Fuses	40
Semiconductor Fuses	70
SLC Series	26
Solar Fuses	56
SPF Series	62
SPFI Series	61
SPFJ Series	63
SPL001	110
Splicer Blocks	130
SPNH Series	60
SPXI Series	59
SPXV Series	58
Stud-Mounted Fuse Blocks	127
Suppression Products	160
Technical Information	170
Telecom Fuses	49
TLN Series	51
TLO Series	65
TLS Series	52
TMOV	162
TOO Series	65
Varistors	162
WPB Series	149

© 2023 Littelfuse, Inc.

Local Resources for a **GLOBAL** Market

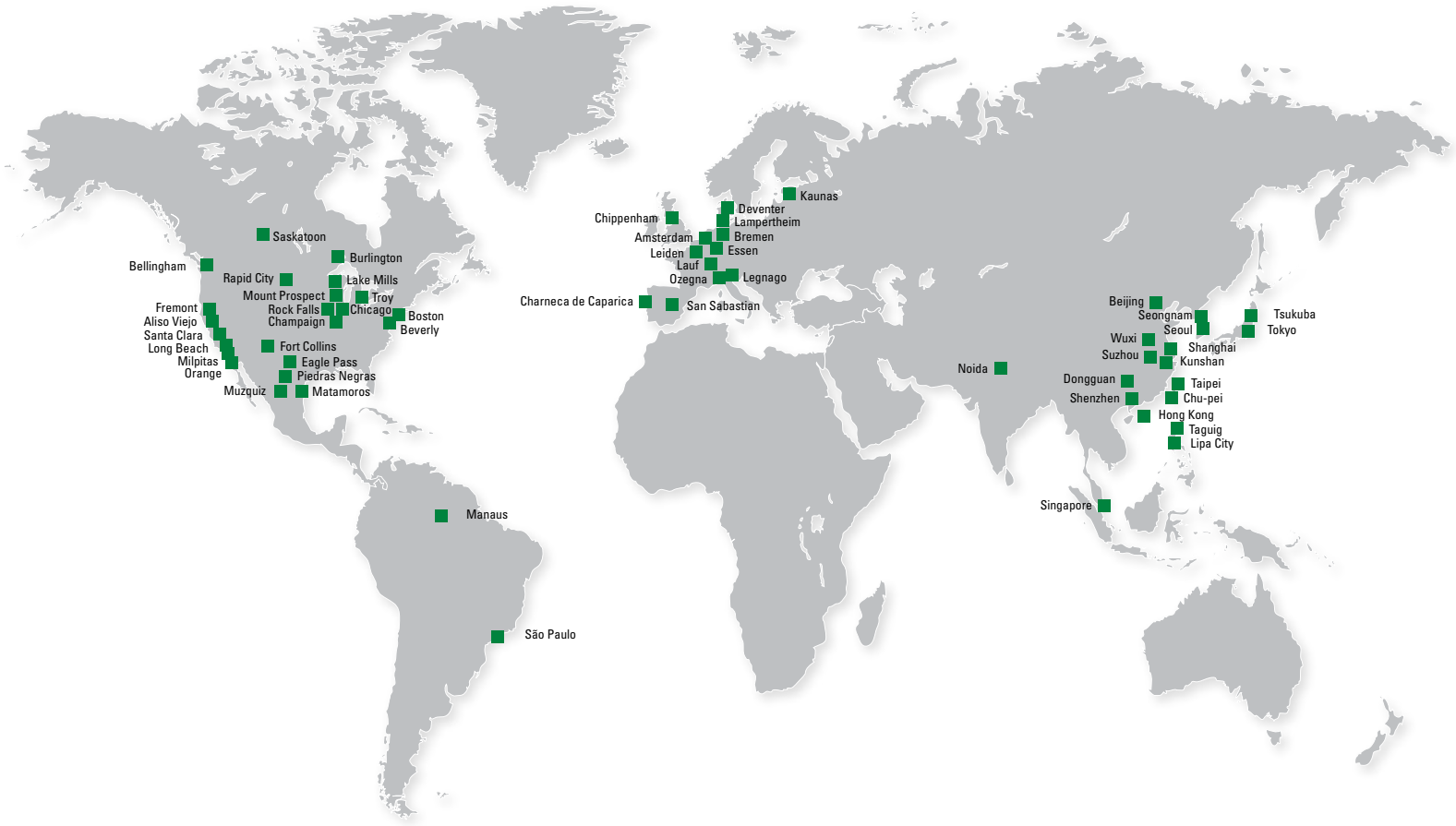



Protection Relays & Controls Catalog (PF130N)

The comprehensive line of electronic and microprocessor-based protection relays, timers, and flashers safeguard equipment and personnel to prevent expensive damage, downtime or injury due to electrical faults.

Solar Products Catalog (PF140N)

Littelfuse solar products are designed specifically for photovoltaic applications where issues such as heat, efficiency, longevity and global standards impact the choices in selecting circuit protection.



Visit Technical Resources at Littelfuse.com

Technical information is only a click away. The Littelfuse Technical Resources contains datasheets, product manuals, whitepapers, application guides, demos, on-line design tools, and more.

An Extension of Your Team



Technical Hotline (+1 800-TEC-FUSE or +1 800-832-3873)

Littelfuse engineers are a phone call away to help identify potential issues and provide product recommendations to resolve problems.

Application and Field Support

Our experienced product and application engineers work step-by-step with customers from design to installation to determine the best solution.







North America

Littelfuse World Headquarters
8755 West Higgins Road, Suite 500
Chicago, IL 60631, USA

Littelfuse SymCom
1241 Concourse Drive
Rapid City, SD 57703, USA

Littelfuse Startco
140 – 15 Innovation Boulevard
(The Galleria Building)
Saskatoon, SK S7N 2X8, Canada
Tel: +1-306-373-5505

Hartland Controls now part of **Littelfuse**
807 Antec Road
Rock Falls, IL 61071, USA
Tel: +1-815-626-5170

Technical Support:
Tel: +1-800-TEC-FUSE
E-mail: techline@littelfuse.com

Customer Service:
Tel: +1-800-227-0029
E-mail: PG_CSG@littelfuse.com

Asia

Littelfuse
Unit 1604B Desay Building,
Gaoxin Nanyi Ave.
Hi-Tech Industrial Park
Nashan District
Shenzen, 518057, China
+86 755 8207 0760

Europe

Littelfuse
Julius-Bamberger-Str. 8a
Bremen, D-28279, Germany
+49 421 82 87 3 147

Littelfuse products are certified to many standards around the world. To check certifications on specific components, please refer to the specific product datasheet on Littelfuse.com.

Disclaimer Notice – Information furnished is believed to be accurate and reliable. However, users should independently evaluate the suitability of and test each product selected for their own applications. Littelfuse products are not designed for, and may not be used in, all applications. Read complete Disclaimer Notice at **www.littelfuse.com/product-disclaimer.**

© 2023 Littelfuse, Inc.

FORM PF101N
Rev: 5-D-122023